CONDITIONAL USE SITE PLAN for ORLEANS HARBOUR BOAT DOCKS & LIFTS

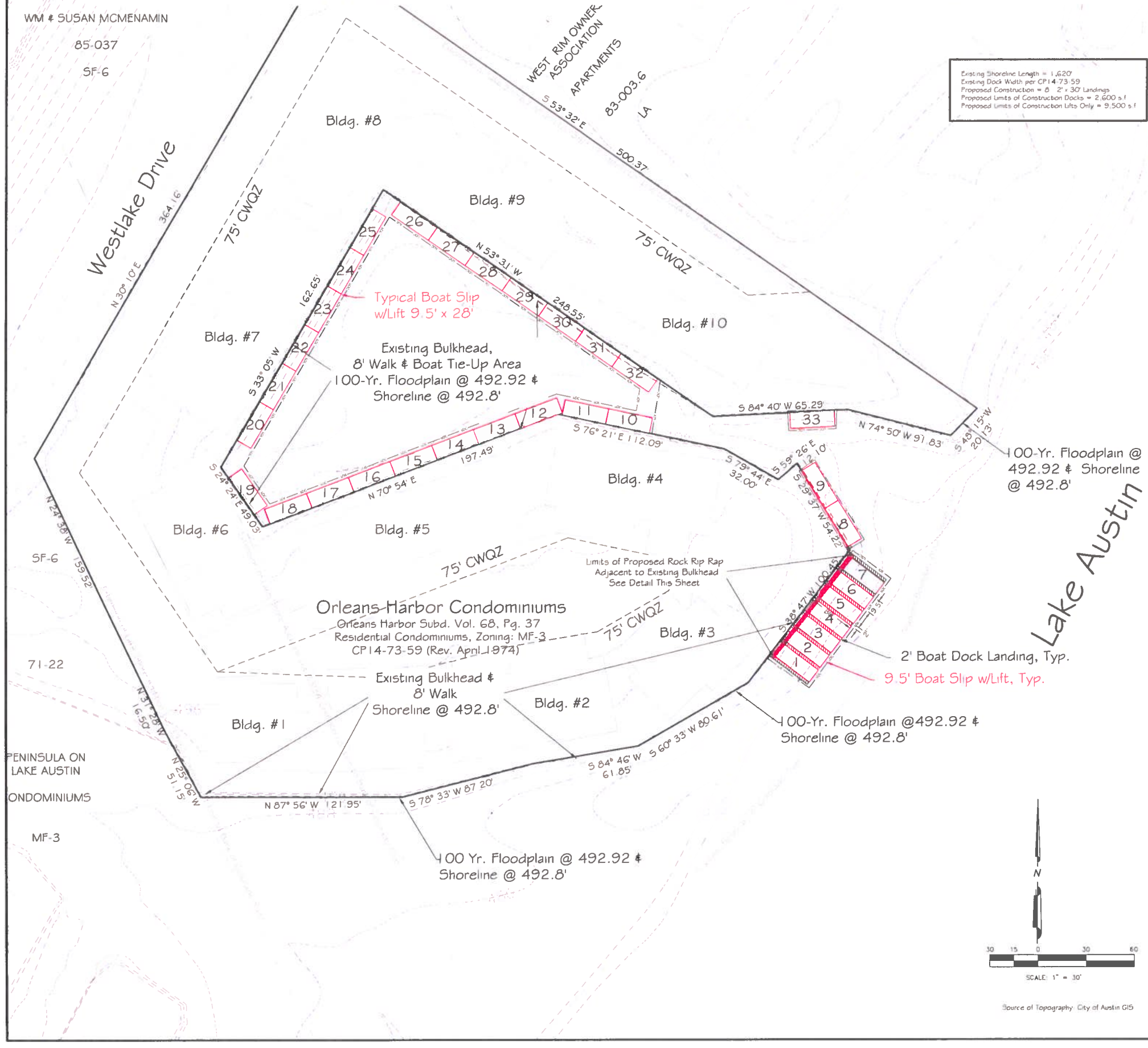

NOTES:

1. A DOCK MUST BE CONTINUOUSLY LIGHTED WITH AMBER LIGHTS BETWEEN SUNSET AND SUNRISE EACH DAY.
2. A DOCK MUST HAVE AT LEAST ONE LIGHT STATIONS. THE LIGHT STATION MUST BE LOCATED ON THE END OF THE DOCK AND ON THE SIDE THAT IS FARTHEST FROM AND PARALLEL TO THE SHORELINE. THE LIGHT MUST BE VISIBLE TO A PROPERLY APPROACHING WATERCRAFT.
3. NAVIGATION LIGHTS MUST HAVE A TWO-BULB FIXTURE, WITH TWO WORKING LIGHT BULBS RATED BETWEEN 7-1/2 AND 25 WATTS INCLUSIVE. LIGHT BULBS OR BULB COVERS MUST BE AMBER, AND WHITE LIGHT MAY NOT RADIATE FROM THE FIXTURE. WEATHERPROOF LAMP HOLDERS AND JUNCTION BOXES ARE REQUIRED. EACH LIGHT FIXTURE MUST BE WIRED WITH A SWITCH OPERATED BY A PHOTOELECTRIC CELL SO THAT THE LIGHTS WILL OPERATE AUTOMATICALLY DURING THE HOURS THAT THE DOCK IS REQUIRED TO BE LIGHTED.
4. ALL WORK SHALL OCCUR WITHIN THE LIMITS OF CONSTRUCTION AS SHOWN ON THE PLAN, AND THAT NO MATERIALS OR EQUIPMENT WILL BE DELIVERED TO THE SITE FROM THE LANDWARD SIDE OF THIS PROJECT.
5. NO SHORELINE IMPROVEMENTS ARE AUTHORIZED WITH THIS SITE PLAN. SHORELINE EDGE TO REMAIN UNCHANGED.
6. CONTAINERS OF HAZARDOUS MATERIALS, FUEL, OIL, HERBICIDES, INSECTICIDES, FERTILIZERS OR OTHER POLLUTANTS MAY NOT BE STORED ON DOCKS EXTENDING INTO OR ABOVE LAKE AUSTIN.
7. NUMBER OF BOAT LIFTS LIMITED TO 33 AS SHOWN ON SITE PLAN.
8. CITGO AQUAMARINE OIL 46, OR EQUIVALENT HAZARD LEVEL HYDRAULIC FLUID SHALL BE USED FOR ANY HYDRAULIC OPERATED LIFTS.
9. ALL TIE-UP CLEATS, EYEBOLTS AND TIE-DOWNS ALONG THE BULKHEAD ON THE MAIN BODY OF LAKE AUSTIN AND SOUTH CANAL AREA SHALL BE REMOVED. THIS SITE PLAN SHALL PROHIBIT THE INSTALLATION OF ANY NEW CLEATS, EYEBOLTS OR TIE-DOWN DEVICES ALONG THE BULKHEAD ON THE MAIN BODY OF LAKE AUSTIN AND SOUTH CANAL AREA.

ATTENTION INSPECTOR NOTES:

1. COMPLIANCE WITH BUILDING CODE IS REQUIRED AND IS TO BE REVIEWED FOR COMPLIANCE DURING BUILDING CODE REVIEW.
2. FOR THE BUILDING PERMIT, A SIGNED AND SEALED LETTER BY A LICENSED PROFESSIONAL SHALL BE SUBMITTED TO THE CITY OF AUSTIN, PER THE LAND DEVELOPMENT CODE, 25-12-3 1612.4. CERTIFYING THAT THE STRUCTURE IS IN ACCORDANCE WITH ASCE 24, FLOOD RESISTANT DESIGN AND CONSTRUCTION.
3. THE PROPOSED LANDINGS MUST COMPLY WITH ALL REQUIREMENTS OF LDC 25-2-1174 (STRUCTURAL REQUIREMENTS), AND MUST COMPLY WITH CHAPTER 25-12, ARTICLE 1 (UNIFORM BUILDING CODE) AND THE BUILDING CRITERIA MANUAL.
4. EACH DOCK LANDING MAY UTILIZE UP TO FOUR (4) PILES PER DOCK.

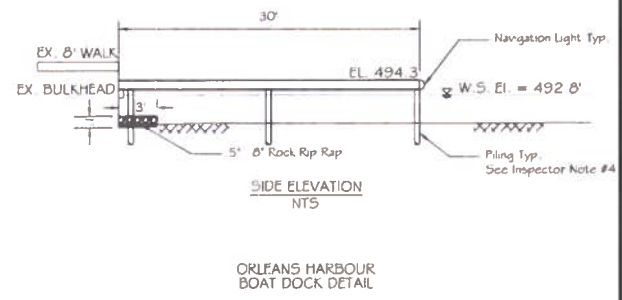

ORLEANS HARBOUR BOAT DOCK DETAIL

PROJECT ADDRESS: 2401 - 2465 WESTLAKE DRIVE

C6

NO.	DATE	REVISION	APPVD

BRUCE S. APPERLE 92021 REGISTERED PROFESSIONAL ENGINEER STATE OF TEXAS

APPERLE COMPANY
Engineering, Planning & Development Services
10088 Circleview Drive, Austin, Texas 78733 512 329-8241
Texas Board Of Professional Engineers Registration Number F-1986

CONDITIONAL USE SITE PLAN for ORLEANS HARBOUR BOAT DOCKS & LIFTS

ELEVATIONS & PLAN VIEW

DESIGNED: BSA
APPROVED:
SCALE: NTS
ORLEANS HARBOUR
DATE: Aug 23, 2012
SHEET 2 of 2

2

SPC-2011-0346D

ORLEANS HARBOUR CONDITIONAL USE SITE PLAN SPC-2011-0346D

SYNOPSIS

BLDG. NO.	NO. OF UNITS	TYPE OF UNITS	BR/BATHS PER UNIT	GND. FL. AREA PER UNIT	GARAGE FL. AREA PER UNIT	TOTAL GND. AREA PER UNIT	2ND FL. AREA PER UNIT	GRAND TOTAL AREA PER UNIT	GROUND FL. AREA PER BLDG.	GARAGE FL. AREA PER BLDG.	TOTAL GND. AREA PER BLDG.	2ND FL. AREA PER BLDG.	GRAND TOTAL AREA PER BLDG.	PARKING PER UNIT	HT.
1	4	A	2/3	1330	550	1880	625	2505	5320	2200	7520	2500	10020	2	2
2	3	A	2/3	1330	550	1880	625	2505	3990	1650	5640	1875	7515	2	2
3	2	A	2/3	1330	550	1880	625	2505	2660	1100	3760	1250	5010	2	2
4	3	A	2/3	1330	550	1880	625	2505	3990	1650	5640	1875	7515	2	2
5	4	A	2/3	1330	550	1880	625	2505	5320	2200	7520	2500	10020	2	2
6	3	A	2/3	1330	550	1880	625	2505	3990	1650	5640	1875	7515	2	2
7	4	A	2/3	1330	550	1880	625	2505	5320	2200	7520	2500	10020	2	2
8	3	A	2/3	1330	550	1880	625	2505	3990	1650	5640	1875	7515	2	2
9	3	B	2/2½	980	550	1530	625	2155	2940	1650	4590	1875	6465	2	2
10	4	B	2/2½	980	550	1530	625	2155	3920	2200	6120	2500	8620	2	2
TOTAL	33	26 A 7 B							41440	18150	59590	20625	80215	2	2

NOTES:

1. This special permit does not constitute Building Code Approval.
2. Separate request and approval of driveways to be obtained from Dept. of Public Works/City of Austin prior to beginning construction.

PLANNING COMMISSION APPROVAL
SITE PLAN APPROVED BY CITY PLANNING COMMISSION
1-8 1974 UNDER SEC. 45-9.4 OF THE ZONING ORDINANCE OF THE CITY OF AUSTIN AND IS MADE A PART OF SPECIAL PERMIT RESOLUTION NO. 74-7
EXECUTIVE SECRETARY

SUBDN. C8s-74-08
'ORLEANS HARBOUR'
Recorded: Bk. 68, Pg. 37

ORLEANS HARBOUR
A 33-UNIT CONDOMINIUM PROJECT
ON WEST LAKE DRIVE, LAKE AUSTIN
WILKENSON SPARKS SURVEY IN TRAVIS COUNTY, TEXAS SURVEYED BY B.F. PRIEST ON 6-4-73
TOTAL AREA 3.307 A OR 144074.3[illegible] FT.

P 1 / A-1 SITE PLAN 1"=20'
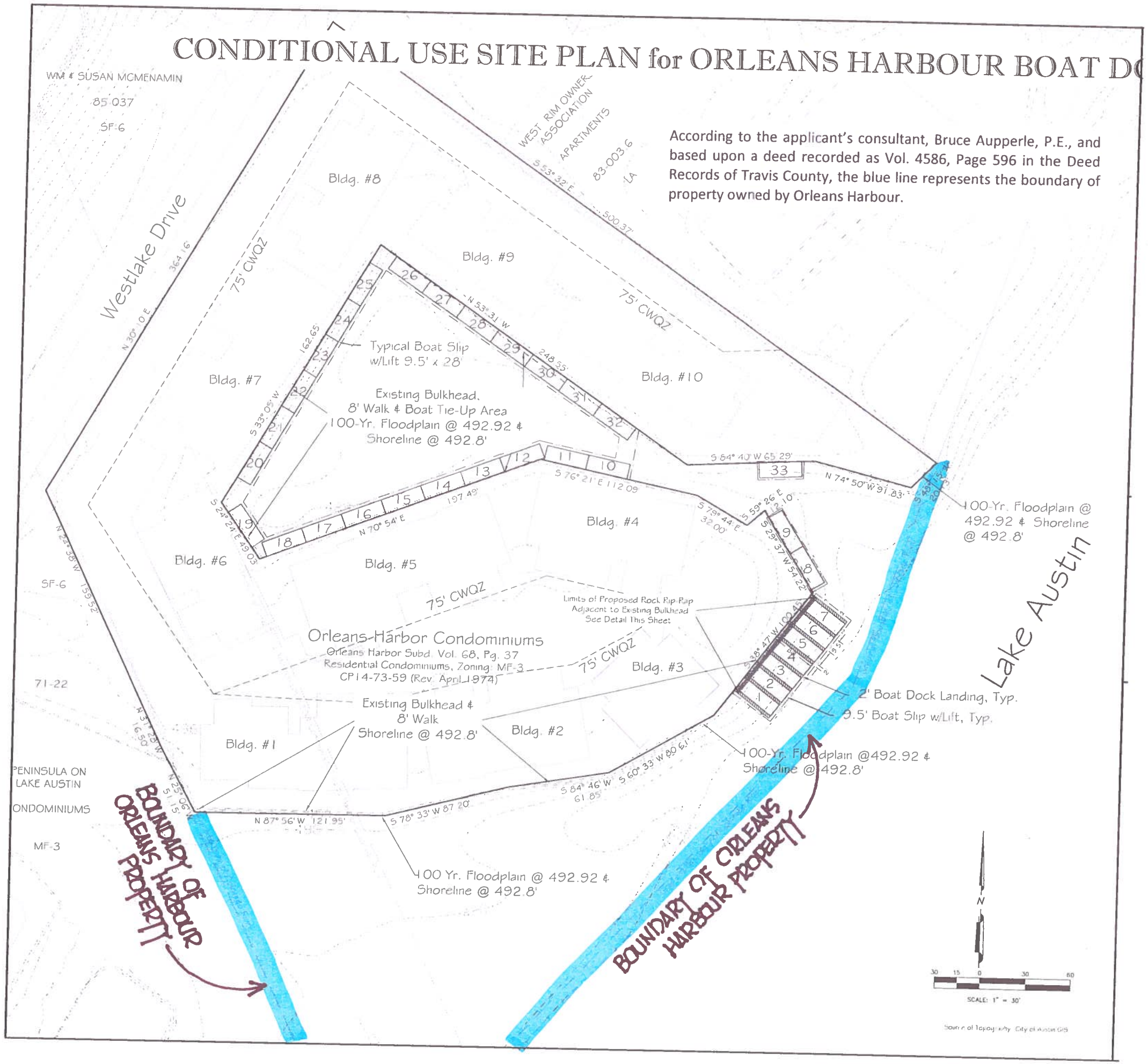
CONDITIONAL USE SITE PLAN for ORLEANS HARBOUR BOAT DO