CITY OF AUSTIN Development SERVICES DEPARTMENT

Residential Review – One Texas Center
505 Barton Springs Road, Austin, TX 78704; (512) 978-4000

Residential New Construction and Addition Permit Application

To complete this form electronically: Open with Internet Explorer, then Click Here to Save and continue.

Property Information

Project Address: 802 PRESSLER	Tax Parcel ID: 106779
Legal Description: 50X103 FT OLT 3 DIVISION Z	
Zoning District: SF3	Lot Area (sq ft): 5,143.00
Neighborhood Plan Area (if applicable): OLD WEST AUSTIN (SFR)	Historic District (if applicable):

Required Reviews

Is project participating in S.M.A.R.T. Housing? ○ Y ● N
(If yes, attach signed certification letter from NHCD, and signed conditional approval letter from Austin Energy Green Building)

Does project have a Green Building requirement? ○ Y ● N
(If yes, attach signed conditional approval letter from Austin Energy Green Building)

Is this site within an Airport Overlay Zone? ○ Y ● N
(If yes, approval through Aviation is required)

Does this site have a septic system? ○ Y ● N
(If yes, submit a copy of approved septic permit)

Does the structure exceed 3,600 square feet total under roof? ○ Y ● N (If yes, Fire review is required)
Is this property within 200 feet of a hazardous pipeline? ○ Y ● N (If yes, Fire review is required)

Is this site located within an Erosion Hazard Zone? ○ Y ○ N
(If yes, EHZ review is required)

Is this property within 150 feet of the 100 year floodplain? ○ Y ● N (Proximity to floodplain may require additional review time.)

Is there a protected sized tree on this lot or adjacent lot(s)? ○ Y ● N (If yes, application for a tree permit with the City Arborist is required)
Note: Include tree location(s) on plot plan.

Is this site within the Residential Design and Compatibility Standards Ordinance Boundary Area? (LDC 25-2 Subchapter F) ● Y ○ N

Does this site currently have: water availability? ● Y ○ N
wastewater availability? ● Y ○ N
(If no, contact Austin Water Utility to apply for water/wastewater taps and/or service extension request.)

Are there existing water/wastewater infrastructure, appurtenances or existing water/wastewater easements located on site? ● Y ○ N
(If yes, contact Austin Water Utility Pipeline Engineering for review and approval)

Does this site have or will it have an auxiliary water source? ○ Y ● N (If yes, submit approved auxiliary and potable plumbing plans.)
(Auxiliary water supplies are wells, rainwater harvesting, river water, lake water, reclaimed water, etc.)

Does this site require a cut or fill in excess of four (4) feet? ○ Y ● N (If yes, contact the Development Assistance Center for more information)

Is this site within the Waterfront Overlay? ○ Y ● N
(LDC 25-2 Subchapter C Article 3)

Is this site within the Lake Austin Overlay? ○ Y ● N
(LDC 25-2-180, 25-2-647)

Does this site front a paved street? ● Y ○ N
(If no, contact Development Assistance Center for Site Plan requirements.)

Is this site adjacent to a paved alley? ○ Y ● N
(Public Works approval required to take access from a public alley.)

Does this site have a Board of Adjustment (BOA) variance? ○ Y ● N Case # _____ (if applicable)
Does this site have a Residential Design and Compatibility Commission (RDCC) waiver? ○ Y ● N
(If yes, provide a copy of decision sheet. Note: A permit cannot be approved within 10 days of approval of a variance from BOA.)

Description of Work

Is Total New/Added Building Area > 5,000 Sq Ft? ○ Y ● N (If yes, construction material recycling is required per LDC 25-11-39)

Existing Use: ● vacant ○ single-family residential ○ duplex residential ○ two-family residential ○ other: _____

Proposed Use: ○ vacant ● single-family residential ○ duplex residential ○ two-family residential ○ other: _____

Project Type: ○ new construction ○ addition ○ addition/remodel ○ other: _____

Will all or part of an existing exterior wall, structure, or roof be removed as part of the project? ○ Y ○ N
(Note: Removal of all or part of a structure requires a demolition permit application.)

# existing bedrooms: 0	# bedrooms upon completion: 3	# baths existing: 0.0	# baths upon completion: 5.0

Project Description: (Note: Please provide thorough description of project. Attach additional pages as necessary.)

TWO STORY WOOD FRAMED CONSTRUCTION OF A SINGLE-FAMILY RESIDENTIAL WITH BALCONY & BASEMENT + Pool

Trades Permits Required (Circle as applicable): electric plumbing mechanical (HVAC) concrete (R.O.W.)

Job Valuation

Total Job Valuation:	Amount of Total Job Valuation dedicated to all Addition and/or New Construction:	Amount of Total Job Valuation dedicated to all Remodel/Repair:
$ 400K	$ 400k	Bldg: $ 372K
Note: The total job valuation should be the sum total of all valuations noted to the right. Labor and materials only, rounded to nearest dollar. Permit fees are based on adopted fee schedule.	Amount for Primary Structure: $ 400K Elec: ●Y ○N | Plmbg: ●Y ○N | Mech: ●Y ○N	Elec: $ 8 Plmbg: $ 10 Mech: $ 10
	Amount for Accessory Structure: $ _____ Elec: ○Y ○N | Plmbg: ○Y ○N | Mech: ○Y ○N	TOTAL: $ 400k

Please utilize the Calculation Aid on the last page of the Additional Information, page 7, as a guide to complete the following calculations and to provide supplemental information for thorough review.

Site Development Information

Area Description Note: Provide a separate calculation for each distinct area. Attach additional sheets as necessary. Measurements are to the outside surface of the exterior wall.	Existing Sq Ft		New/Added Sq Ft		Total Sq Ft	
	Bldg 1	Bldg 2	Bldg 1	Bldg 2	Bldg 1	Bldg 2
a) 1st Floor conditioned area			1,065.00		1,065.00	0.00
b) 2nd Floor conditioned area			1,217.00		1,217.00	0.00
c) 3rd Floor conditioned area			612.00		612.00	0.00
d) Basement			1,051.00		1,051.00	0.00
e) Covered parking (garage or carport)			279.00		279.00	0.00
f) Covered patio, deck, porch, and/or balcony area(s)			616.00		616.00	0.00
g) Other covered or roofed area					0.00	0.00
h) Uncovered wood decks					0.00	0.00
Total Building Area (total a through h)	0.00	0.00	4,840.00	0.00	4,840.00	0.00
i) Pool					0.00	0.00
j) Spa					0.00	0.00
k) Remodeled Floor Area, excluding Addition / New Construction	—	—	—	—		

Building Coverage Information

Note: Building Coverage means the area of a lot covered by buildings or roofed areas, but excludes ground-level paving, landscaping, open recreational facilities, incidental projecting eaves, balconies, and similar features. Pools, ponds, and fountains are not included in this measurement. (LDC 25-1-21)

Total Building Coverage (sq ft): 1,790.00 % of lot size: 35

Impervious Cover Information

Note: Impervious cover is the total horizontal area of covered spaces, paved areas, walkways, and driveways. The term excludes pools, ponds, fountains, and areas with gravel placed over pervious surfaces that are used only for landscaping or by pedestrians. For an uncovered wood deck that has drainage spaces between the deck boards and that is located over a pervious surface, 50 percent of the horizontal area of the deck is included in the measurement of impervious cover. (LDC 25-1-23)

Total Impervious Cover (sq ft): 2,162.00 % of lot size: 42

Setbacks

Are any existing structures on this site a non-compliant structure based on a yard setback requirement? (LDC 25-2-492) ○Y ○N

Does any structure (or an element of a structure) extend over or beyond a required yard? (LDC 25-2-513) ○Y ○N

Is front yard setback averaging being utilized on this property? (LDC 25-2, Subchapter F, Sec. 2.3 or 25-2-778) ○Y ○N

Height Information (LDC 25-1-21 or 25-2 Subchapter F, Section 3.4)

Building Height: 27 ft 10 in Number of Floors: 3

Parking (LDC 25-6 Appendix A & 25-6-478)

of spaces required: 2 # of spaces provided: 2

Right-of-Way Information

Is a sidewalk required for the proposed construction? (LDC 25-6-353) ●Y ○N

*Sidewalks are to be installed on any new construction of a single family, two-family or duplex residential structure and any addition to an existing building that increases the building's gross floor area by 50 % or more.

Will a Type I driveway approach be installed, relocated, removed or repaired as part of this project? ●Y ○N

Width of approach (measured at property line): 12.0 ft Distance from intersection (for corner lots only): _____ ft

Are storm sewer inlets located along the property or within ten (10) feet of the boundaries of the property? ○Y ●N
(If yes, drainage review is required)

Subchapter F

Gross Floor Area

This section is only required for projects located within the Residential Design and Compatibility Standards Ordinance Boundaries as defined and illustrated in Title 25-2 Subchapter F of the Land Development Code. The Gross Floor Area of each floor is measured as the area contained within the outside edge of the exterior walls.

		Existing Sq Ft	New/Added Sq Ft	Proposed Exemption (check article utilized)	Applied Exemption Sq Ft	Total Sq Ft
1st Floor			1,065.00			1,065.00
2nd Floor			1,217.00			1,217.00
3rd Floor						0.00
Area w/ ceilings > 15'				Must follow article 3.3.5		0.00
Ground Floor Porch* (check article utilized)				○ Full Porch sq ft (3.3.3 A) ○ 200 sq ft (3.3.3 A 2)		0.00
Basement			1,051.00	Must follow article 3.3.3B, see note below	1,051.00	0.00
Attic			634.00	Must follow article 3.3.3C, see note below	634.00	0.00
Garage**: (check article utilized)	Attached			☐ 200 sq ft (3.3.2 B 1)		0.00
	Detached			○ 450 sq ft (3.3.2 A 1 / 2a) ○ 200 sq ft (3.3.2 B 2a / 2b)		0.00
Carport**: (check article utilized)	Attached		281.00	○ 450 sq ft (3.3.2 A 3) ○ 200 sq ft (3.3.2 B 1)***	281.00	0.00
	Detached			☐ 450 sq ft (3.3.2 A 1)		0.00
Accessory Building(s) (detached)						0.00
Totals		0.00	4,248.00			2,282.00

TOTAL GROSS FLOOR AREA (add Total Sq Ft column) 2,282.00

(Total Gross Floor Area ÷ Lot Area) x 100 = 44 Floor-To-Area Ratio (FAR)

Is a sidewall articulation required for this project? ○ Y ● N

(Yes, if: a wall, 15' tall or higher, within 9 feet of a side property line extends further than 36 feet in length per article 2.7.1)

Does any portion of the structure extend beyond a setback plane/exemption exhibit (aka "tent")? ● Y ○ N

(If Yes, indicate applicable section of Subchapter F and length of protrusion on the drawings.)

***Ground Floor Porch exemption:** A ground floor porch, including a screened porch, may be exempted, provided that the porch is not accessible by automobile and is not connected to a driveway; and the exemption may not exceed 200 square feet if a porch has habitable space or a balcony above it.

****Garage and carport exemptions (in relation to primary structure):** Exemptions must follow the code as outlined in Title 25-2 Subchapter F 3.3.2. Each amount listed (450 or 200) is the maximum exclusion allowed per the article designated. Note: Article 3.3.2 C, "An applicant may receive only one 450-square foot exemption per site under paragraph A. An applicant who receives a 450-square foot exemption may receive an additional 200-foot exemption for the same site under paragraph B, but only for an attached parking area used to meet minimum parking requirements."

***Ordinance article 3.3.2 B 1 is the only 200 sq ft exemption that may be combined with a 450 sq ft exemption. Otherwise only one 450 exemption or one 200 sq ft exemption may be taken.

Basement exemption: A habitable portion of a building that is below grade may be exempted if the habitable portion does not extend beyond the first-story footprint and is below natural or finished grade, whichever is lower; and it is surrounded by natural grade for at least 50% of its perimeter wall area and the finished floor of the first story is not more than three feet above the average elevation at the intersections of the minimum front yard setback line and the side property lines.

Habitable Attic exemption: A habitable portion of an attic may be exempted if: 1) The roof above it is not a flat or mansard roof and has a slope of 3 to 12 or greater; 2) It is fully contained within the roof structure; 3) It has only one floor; 4) It does not extend beyond the footprint of the floors below; 5) It is the highest habitable portion of the building, or a section of the building, and adds no additional mass to the structure; and 6) Fifty percent or more of the area has a ceiling height of seven feet or less.

Contact Information			
Owner	PEDRO ELIZONDO	Applicant/Agent	Jenifer Cindy Crisler
Mailing Address	1 BIVERIDOM	Mailing Address	1508 W. 30th St
Phone	832.567.1533	Phone	512.351.5948
Email	gumby.elizondo@yahoo.com	Email	jennacindy@gmail.com
General Contractor	Butterfield Custom	Design Professional	STEVE ZAGORSKI ARCHITECT
Mailing Address	5025 BURNET RD	Mailing Address	1009 West 6th Suite 206, Austin, TX 78703
Phone	512.563.6045	Phone	(512) 789-3259
Email	matt@butterfieldcustomhomes.com	Email	stevezagorski.com

Authorization

✓ I understand that in accordance with Sections 25-1-411 and 25-11-66 of the Land Development Code (LDC), non-compliance with the LDC may be cause for the Building Official to suspend or revoke a permit and/or license.

✓ I acknowledge that this project qualifies for the Site Plan Exemption as listed in Section 25-5-2 of the LDC. I understand that nothing may be built upon or over an easement.

✓ I further understand that no portion of any roof structure may overhang in any public utility or drainage easement. I acknowledge that customer will bear the expense of any necessary relocation of existing utilities to clear this driveway location and/or the cost to repair any damage to existing utilities caused during construction. Water services, meters, and wastewater cleanouts are not permitted within or beneath driveways or sidewalks. Private plumbing appurtenances will not be located in public right-of-way or public easements. Private plumbing lines will not cross lot lines.

✓ **I agree that this application is good for twelve (12) months after the date it is filed, and will expire if not approved for compliance within that time frame. If the application expires, a new submittal will be required and compliance with current code may be required.**

✓ I hereby certify that to the best of my knowledge and ability, the information provided in this application is complete and accurate.

✓ I further acknowledge that, should any information contained herein prove incorrect, the building official may suspend or revoke any resulting permit and/or license.

✓ I also understand that if there are any trees greater than 19 inches in diameter located on the property and immediately adjacent to the site, I am required to complete a Tree Ordinance Review Application by contacting (512) 974-1876 or cityarborist@austintexas.gov. This initiates the tree permitting requirement needed to proceed with the development review process.

✓ I also understand that if there is a septic system located on the property, I am required to complete an On-site Sewage Facility (a.k.a. an OSSF or septic system) application by contacting Austin Water at (512) 972-0050 or ossf@austintexas.gov . This initiates the septic system permitting requirement needed to proceed with the development review process.

✓ Erosion and Sedimentation Controls are required per Section 25-8-181 of the LDC. **Failure to comply with this requirement may result in a Stop Work Order and/or legal action by the City of Austin including criminal charges and fines of up to $2,000.00 per day.**

✓ I acknowledge that a sidewalk will be required on any new construction of a single family, two-family or duplex residential structure and any addition to an existing building that increases the building's gross floor area by 50 % or more.

✓ I acknowledge if my plans are subject to a technical review it will not be construed to be a permit for, or an approval of any violation of any of the provisions of the current adopted building codes or another ordinance of the City of Austin.

✓ I am the record owner of this property and authorize the agent/applicant listed above to apply for and acquire a permit on my behalf.

Owner's signature: _____ Date: _____

Applicant's signature: Jenifer Cindy Crisler Date: 10.25.17

Design Professional's signature: _____ Date: 10.11.17

General Contractor's signature: _____ Date: _____

OWNER'S AUTHORIZATION LETTER

I/We hereby certify that I/we am/are the owner(s) of the property referenced below. I/We am/are respectfully requesting processing and approval of the below referenced permit(s) for review. I/We hereby authorize the Applicant listed on this application to act on my/our behalf during the processing and presentation of this request. They shall be the principal contact with the City in processing this application.

PROPERTY ADDRESS: 802 PRESSLER

PR#:

X 10/10/17

Owner's Signature Date

PEDRO ELIZONDO

Owner's Printed Name

X

Owner's Signature Date

Owner's Printed Name

AUSTIN ENERGY
One Texas Center | 505 Barton Springs Road
Phone: (512) 974-2632, (512) 974-9112 ,
Email: aebspaespa@austinenergy.com

Building Service Planning Application (BSPA)

This form to be used for review of Building Permit only
For use in DAC only

Responsible Person for Service Request: Jenifer Crisler

Email: jenna.cundy@gmail.com Fax: 551 0776 Phone: 351-5948

☒ Residential ○ Commercial ○ New Construction ○ Remodeling

Project Address: 802 PRESSLER –OR–

Legal Description: 50X103 FT OLT 3 DIV Z Lot: _____ Block: _____

Who is your electrical provider? ☒ AE ☐ Other: _____

☒ Overhead Service ○ Underground Service ☒ Single-Phase (1Ø) ○ Three-Phase (3Ø)

Location of meter: _____

Number of existing meters on gutter: _____ (show all existing meters on riser diagram)

Expired permit #: _____

Comments: NEW 2-STORY HOUSE

AE APPROVED
303-508
OCT 30 2017
MCP

All structures/pool/etc.
Must maintain a 10'OH
Horizontal clearance from
AE energized power lines.

All structures must maintain 7'6" clearance from AE energized distribution power lines. Enforced by AE and NESC codes-this review DOES NOT include transmission power lines.

Jenifer Crisler
BSPA Completed by (print name)

512-351-5948
Phone

Jenifer Crisler
BSPA Completed by (signature)

10/10/17
Date

Application expires 180 days after the date of approval
(Any change to the above information requires a new BSPA)

SAVE Form

Office Use Only

_____ Approved ☐ Yes ☐ No _____ _____
AE Representative Date Phone

Check list for residential intake 802 PRESSLER

_____ Intake Fees

Bill to ELIZONDO
1 blue Ribbon
Westport, CT

Residential app fees
Tree Permit fees
Demo Permit fees
Partial Demo fees
NHRD fees
HLC fees

Documents Needed for Submission

_____ Austin Energy ✓
_____ Austin Water Utility ✓
_____ Residential Building Permit Application ✓
_____ Owners Authorization ✓
_____ Survey or site Plan ✓
_____ Architectural Plan Set ✓
_____ Engineering Plan Set ✓
_____ Orig Demo Permit App [illegible]
_____ Tax certificate n/A
_____ Warranty deed n/A
_____ Tree Permit App n/A
_____ NHRD App

Scope of work
2 Story SF house w/ balcony, basement & Pool

Valuations

Notes:

Austin WATER | CITY OF AUSTIN Development SERVICES DEPARTMENT

Residential Review – One Texas Center | 505 Barton Springs Road, Austin, Texas 78704 | Phone: 512-978-4000

Water & Wastewater Service Plan Verification (WWWSPV)

All fields are required

Service Address: 802 PRESSLER

Lot: OUTLOT 3 Block: DIV 2 Subdivision: 50X103 FT OLT 3 DIV 2

Dwelling Units demolished? Y☒ N☐ New Dwelling Units to be built? Y☒ N☐

Multiple Dwelling Units on same Lot? Y☐ N☒ Corner Lot? Y☐ N☒

Land Status/Re-subdivision? Y☒ N☐

Original Address: Existing Use: SF RESIDENCE

Proposed Use: ☒ Single-Family Res. 1790 sq. ft. ☐ Two-Family Res.

☐ Duplex ☐ Accessory Dwelling Unit (<=1,100 sq. ft.)

☐ Other:

Existing # Baths: 1 Additional # Baths: 4 Total # bathrooms the meter(s) will serve: 5

First Meter: Second Meter:

Water meters & wastewater clean-outs are not permitted in sidewalks or driveways

Relocation of services from proposed sidewalks or driveways shall be performed at the applicant's expense.

Signing this form verifies that the information provided is deemed accurate and complete based on available records. The customer is responsible to confirm the location and suitability of existing water and wastewater services. The customer may be responsible for costs associated to corrections due to invalid information provided.

Jennifer Cuelho Cisek 10/10/17 512.351.5948

Applicant Name & Signature *Date* *Phone*

City of Austin Office Use Only

Water main size: 6" Service stub size: 3/4" Service stub change required: Y☒ N☐

Shared Service? Y☐ N☒ If Yes, meter #, size & address: —

Existing meter #: 103077 Existing meter size: 5/8

Existing water service line/meter location: in front

Upgrade required: Y☒ N☐ New meter(s) size: new 3/4" mtr

Existing water or wastewater main located on the property: Y☐ N☒

WW main size: 8" WW Service line/clean-out location: in front

Secondary address needed at property? Y☐ N☒ Is the lot legally platted? Y☒ N☐ L. State

Instruction sheet provided to customer? Y☐ N☐ **Utility Plan Required?** Y☐ N☐

Comments:

upgrade water svc due to bath count

RECEIVED OCT 30 2017 AUSTIN WATER UTILITY CONSUMER SERVICE DIVISION - TAPS

AW Engineer Mary Jo Gordon Date 10/30/17 Phone 4-8134

AW Taps Date Phone

Unless the Plumbing is done in strict accordance with City Ordinances, do not turn on the water.

No. A 3368

Sec. 95

PERMIT FOR WATER SERVICE Austin, Texas

M. W. L. Black Address 802 Pressler St.

Plumber J. C. McAlpine Size of Tap 1/2 Date 7-7-30

Foreman's Report.

Date of Connection 7/7/30

Size of Tap Made 3/4

Size Service Made 3/4

Size Main Tapped 2"

From Front Prop. Line to Curb Cock 8'

" " N " " " 7'

Location of Meter out curb

Type of Box box

Depth of Main in St. 2'6"

" " Service Line 2'

From Curb Cock to Tap on Main 4'6"

Checked by Engr. Dept. [illegible] 8-2-30

No. Fittings	Size.
1 Curb Cock	3/4
1 Elbow	3/4
1 St. Elbow	3/4
1 Bushing	3/4
1 ~~Reducer~~	1/2
2' Pipe	3/4
1 ~~Lead~~ Comp.	3/4
1 Nipples	3/4
Union	
Plug	
Tee	
1 Stop	Cock
1 Box	Cast
1 Lid	
Valves	
1-2X3/4 Corporation	
Req. No.	1890

Foreman's Signature [illegible]

TO 6" MAIN ON E-24354

CHANGED

INDEXED

Connecting Charge $ 12 00

Application for Sewer Connection.

№ 9501A

Austin, Texas, 7/1 — 30 1920

To the Superintendent of Sewer and Public Improvements,
City of Austin, Texas.

Sir:-

I hereby make application for sewer connection and instructions on premises owned by N. L. Black

at 802 President Street

which place is to be used as a residence

In this place there are to be installed 4 fixtures.

I agree to pay the City Sewer Department the regular ordinance charge.

Respectfully, N L Black

Location of Public Sewer

Plat 95

Connected 7-8 1930

Size of Main 6 inches

Size of Service 4 inches

58 Feet Deep

12 Feet from Property Line

Feet from Curb Line

Connection made by C. Bell

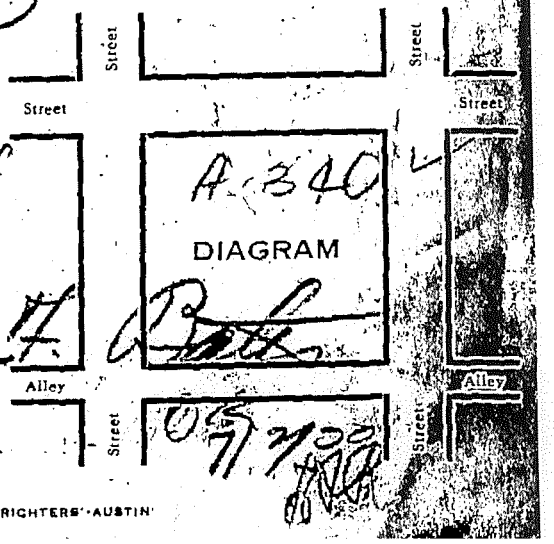

Dug by Bell

05 7 7 00

RIGHTERS' AUSTIN

Geotechnical Assessment and Foundation Recommendations
Proposed Residential Foundation

802 Pressler St.
Austin, TX 78703

Client: Caroline Elizondo

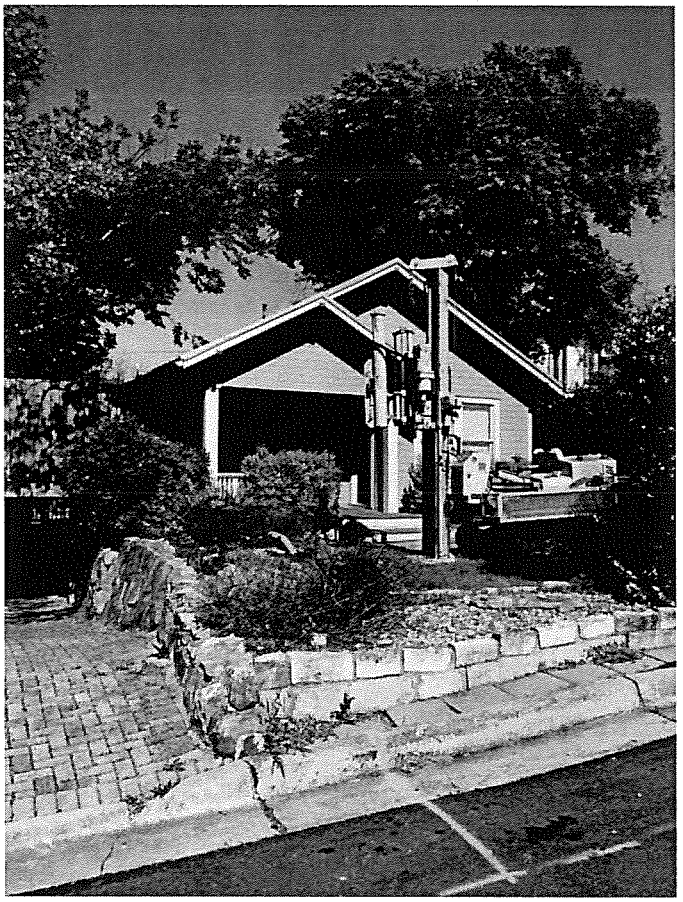

SIMPLIFIED ENGINEERING & CONTRACTING (SEC) Solutions LLC
9201 Hwy 29
Georgetown, TX - 78628

March 29, 2017

Project Number: 16490

Client: Caroline Elizondo

Subject: *Geotechnical Assessment and Foundation Recommendations*
Future Residential Structure at 802 Pressler St., Austin, TX 78703.

SEC Solutions LLC is pleased to submit the results of the geotechnical study for the above-referenced project. This report briefly presents the findings of the study along with our conclusions and foundation design recommendations for the proposed new residential structure at *802 Pressler St., Austin, TX 78703.*

We appreciate the opportunity to serve you and look forward to working with you on other future projects.

Should you have any questions regarding this report, please do not hesitate to email us at *office@sectexas.com* or call us at (512) 215-4364.

Respectfully submitted,

SEC Solutions LLC

STATE OF TEXAS
MARCOS V. DEQUEIROGA
101049
LICENSED
PROFESSIONAL ENGINEER

Marcos V. Dequeiroga, P.E.

TBPE Firm No. 15009

SEC SOLUTIONS
9201 HWY 29
Georgetown, TX 78628
(512) 215-4364

1. Foundation Recommendations

The intent of this report is to provide geotechnical parameters for the design of a conventionally reinforced ("rebar") or post-tensioned slab on grade foundation. The site was visually inspected by qualified personnel and available soils/geologic data was gathered and analyzed.

2. Project Description

The project consists of a new residential, one or two story, single family, residential construction. Expected superimposed loads range from 1,000 to 3,000 pounds per linear foot of perimeter wall. *The site is currently the place of a single story residential construction.* It is our assumption that this structure will be demolished to allow for new construction.

The foundation structure will consist of a monolithic, ground supported, stiffened concrete slab reinforced with conventional reinforcement (rebar) or unbonded post-tension tendons. Design guidelines for conventionally reinforced foundation slab are provided by the Wire Reinforcement Institute (Design of Slab-on-Ground Foundations, 1981) and the FHA BRAB report #33 (1968).

Design and construction of a post-tension foundation shall follow guidelines set forth by the Post-Tension Institute (PTI) publications "Design of Post-Tensioned Slabs-on-Ground", 3rd Edition (2008) and "Construction and Maintenance Manual for Post-Tensioned Slab-on-Ground Foundations" (2006).

3. Site Geology/Soil Map

The proposed site is located in the ***Del Rio Clay and Georgetown Formation (Kdg)***. The Del Rio Clay, calcareous and gypsiferous, becoming less calcareous and more gypsiferous upward, pyrite common, blocky, medium gray, weathers light gray to yellowish gray; some thin lenticular beds of highly calcareous siltstone; marine mega fossils include abundant Exogyra arientina and other pelecypods; thickness 40-70 feet. Georgetown Formation, Kgt,

limestone and marl; mostly limestone, fine grained, argillaceous, nodular, moderately indurated, light gray; some limestone, hard brittle, thick bedded, white; some shale, marly, soft, light gray to yellowish gray; marine megafossils include Kingena wacoensis and Gryphaea washitaensis; thickness 30-80 feet, thins southward. A partial geologic map of the location is shown on Figure 1.

4. Visual Inspection and Geotechnical Boring

At the time of inspection, no evidence of fill material was observed. The site presents low to moderate topography. No evidence of ground water was found.

A site evaluation was conducted by a representative of SEC and *one soil boring was advanced by direct push and auger drilling to a refusal depth of approximately 15 feet below existing grade*. A two-inch outside diameter split barrel (*split-spoon*) sampler and open solid barrel samplers were used to collect subsurface samples. Samples were visually classified by a representative of SEC onsite and placed in sealed containers to reduce moisture loss and disturbance during transport to the lab. Samples are analyzed at the lab. A log of boring is included in this report. Standard Penetration Tests (SPTs) were performed to obtain penetration resistance measurements in accordance with ASTM D 1586.

Based upon the results of the subsurface exploration program, a geotechnical laboratory testing program was established. The following tests on cohesive soil samples were performed: sieve analysis, Atterberg Limit determinations and water content determinations.

5. Site Stratigraphy

Table 1 shows the soil stratigraphy at the boring location.

Table 1. Site Stratigraphy:

Stratum	Approximate Depth (ft)	Approximate Thickness (ft)	Liquid Limit (LL)	Plasticity Index (PI)	USCS Symbol
Stratum I	At Surface	*5.0*	41	23	**CLAY (CL):** *brown, soft, tannish*
Stratum II	5.0	*At depth of termination, approx. 15ft*	50	22	**CLAY (CL-CH):** *yellowish brown, w/ small rocks, hard*

6. Foundation Design Parameters

a. Shallow Foundation: Slab-on-grade

The foundation structure may consist of a conventionally reinforced *(rebar)* foundation slab on grade with stiffening beams. *It is recommended that all topsoil be removed to a minimum depth of 6 inches below existing grade elevation.* For the proposed construction the following design parameters are recommended:

- Design Plasticity Index (PI): **28**
- Potential Vertical Rise (PVR): ***2½"*** (TxDOT Method Tex-124-E).
- Net Allowable Bearing Capacity: **1,400psf** (12 inches below natural grade or compacted select fill).

The parameters for a rebar slab design are provided by the Wire Reinforcement Institute (*Design of Slab-on-Ground Foundations, 1981) and the FHA BRAB report #33 (1968*). Following are the design parameter for a conventionally reinforced stiffened slab on grade:

- Climatic Rating (Cw): **18**
- BRAB Support Index (C): **0.85**
- 1-C: **0.15**
- WRI Cantilever Length (lc): **6.0 FT**

Presented in Table 2 are the parameters for the design of post-tension ribbed foundation. These values are given for the **3rd. Edition** of the Post-

Tension Institute *"Design of Post-Tensioned Slabs-on-ground"*, 2008. For this site the following information is available:

- Design Plasticity Index (PI): **28**
- Thornthwaite Moisture Index: **- 12**

Table 2a. PTI Design Parameters: 3rd. Edition (*"as is" condition, w/ removal of topsoil to a minimum depth of 6in below grade*).

		Center Lift	Edge Lift
Edge Moisture Variation Distance	e_m (FT)	**9.0**	**5.0**
Differential Vertical Soil Movement	y_m (IN)	**1.2**	**1.5**

7. Residential Structural Fill

Structural fill maybe used in order to provide a flat building pad for the foundation or as a method to improve soil conditions by replacing some of the highly expansive clays with properly compacted fill. Suitable fill materials for residential and light commercial construction are coarse-grained soils (USCS symbols SW, SP or SM sands). Fine grained soils may be used (USCS symbols ML or CL) provided that proper compaction effort is present. As an overall requirement, all imported or on-site soils for structural fill should conform to the following Atterberg values:

- Maximum Liquid Limit: 30
- Maximum Plasticity Index: 15

Fill placement should be performed in lifts of 6in to 8in loose thickness. Each lift must be moisture conditioned and mechanically compacted to attain 95% of the maximum dry unit weight of the soil, as determined by the Standard Proctor Method (ASTM D698).

Imported clay soils should be compacted within a moisture content range of 0 to 3 percent above optimum moisture content. Imported granular soils

should be compacted within a moisture range of 3 percent below to 3 percent above optimum unless modified by the project geotechnical engineer. Failure to comply with these requirements will invalidate all the conclusions in this report as well as the design recommendations.

If a third party company is hired to perform quality control of the placement and compaction of the select fill, records for the sampling and test results must be submitted to the geotechnical engineering company for approval.

8. Lateral Earth Pressure: Retaining Structures

Some cantilever retaining walls or basement walls may be needed at this site. The equivalent fluid pressure was determined for various types of backfill materials as presented on Table 3.

Table 3. Equivalent Fluid Pressure (PSF)

Backfill Material	Equivalent Fluid Pressure (PSF)		
	Active Condition	At Rest condition[1]	Passive Condition
a. Crushed Limestone	40	60	500
b. Select Fill (PI<15)	45	80	300
c. Clean Sand	35	60	350

Notes: 1. Rigid Walls (Non-yielding)

The above values for the equivalent fluid pressure do not include the effect of seepage pressures, surcharge loads such as vehicular loads, compaction equipment or future construction near the walls. Compaction levels adjacent to below-grade walls should be maintained at 95 percent of Standard Proctor maximum dry density (ASTM D698). A minimum Factor of Safety of 1.5 should be applied to all lateral loads.

The backfill behind cantilevered walls or basement walls should be drained properly to avoid hydrostatic pressure to develop behind the walls. A 12in to 24in wide drainage zone should be placed immediately behind the

retaining wall, except for the top 12 inches, which should consist of properly compacted clay soil. The drainage zone material can be a clean gravel. A filter fabric should be placed between the gravel and surrounding soils or backfill to prevent migration of surrounding soil into this drainage zone. A foundation drainage system, like a 4-inch diameter perforated PVC pipe, must be installed along the base of the wall. Drain pipe must slope a minimum of 1% or approximately ⅛" per ft.

The maximum toe pressure for footings founded at a minimum of 12" below finish grade elevation *should not exceed 2,000psf*. A coefficient of friction of 0.40 can be used for concrete placed directly on natural bedrock and a value of 0.35 is recommended for footings placed on natural clays or compacted select fill.

9. Surface Drainage

The property must be positively graded at all times to provide for rapid removal of surface water runoff from the foundation system and to prevent ponding of water under floors or seepage toward the foundation system at any time during or after construction. Ponded water will cause undesirable soil swell and loss of strength. As a minimum requirement, finished grades should have slopes of at least 5 percent or 6" drop within the first 10 feet from the exterior walls to allow surface water to drain positively away from the structure. The slope gradient away from the foundation may be reduced to 3 percent for paved areas.

All surface water should be collected and discharged into outlets approved by the civil engineer. Landscape mounds must not interfere with this requirement. In addition, each lot should drain individually by providing positive drainage or sufficient area drains around the buildings to remove excessive surface water.

10. Requirements for Landscaping Irrigation

Sprinkler systems should not be installed where they may cause ponding or saturation of foundation soils within 5 feet of the walls or under a structure. Ponding or saturation of foundation soils may cause soil swell, consequent loss of strength, and movement of the foundation and slab.

Irrigation of landscaped areas should be strictly limited to the amount necessary to sustain vegetation. Excessive irrigation could result in saturating, weakening, and possible swelling of foundation soils.

11. Trees

The presence of trees near the foundation will change the suction profile used in the determination of the design parameters. Typically, all large trees in the vicinity of the foundation pad should be removed to avoid larger than anticipated foundation movement. The expression "large trees" usually refers to trees with a diameter of the trunk equal or more than 24". If removal of the trees is not permitted, the geotechnical engineer must be notified of the presence of large trees in order to adjust the design recommendations. Alternatively, a tree barrier may be installed alongside the perimeter of the foundation to prevent tree roots from changing the moisture content under the slab.

12. Utilities

Pipe zone backfill (i.e. material beneath and immediately surrounding the pipe) may consist of a well-graded import or native material less than ¾ inch in maximum dimension compacted in accordance with recommendations provided above for engineered fill.

Trench zone backfill (i.e. material placed between the pipe zone backfill and the ground surface) may consist of native soil compacted in accordance with recommendations for engineered fill (Ref. 7. Residential Structural Fill).

Where import material is used for pipe zone backfill, we recommend it consist of fine-to-medium-grained sand or a well-graded mixture of sand and gravel and that this material not be used within 2 feet of finish grades. In general, uniformly graded gravel should not be used for pipe or trench zone backfill due to the potential for migration of (1) soil into the relatively large void spaces present in this type of material and (2) water along trenches backfilled with this type of material.

All utility trenches entering buildings and paved areas should be backfilled entirely with native materials or concrete. Where the trenches pass under the building perimeter and curb line, the length of the backfill zone should extend at least 3 feet to either side of the crossing and should replace both the pipe zone (bedding and shading) and trench zone material. This is to prevent surface water from percolating into the imported trench backfill material and moving under the foundation and pavement where such water would remain trapped in a perched condition.

13. Driveways/Parking Areas

Driveways and other flat-work structures should be constructed structurally independent of the foundation system. This allows flatwork movement to occur with a minimum of foundation distress. Driveway slabs should be conventionally reinforced to control crack width and frequency. Additionally, control joints should be provided to control cracking (8ft to 10ft on centers, max.). Driveway slabs should have a minimum thickness of 4 inches and should slope away from the buildings to prevent water from flowing toward the building.

14. Report Limitations

The scope of this report is limited to the design of a post-tensioned or conventionally reinforced slab on grade for a new residential structure and for

specific application to this project. The design parameters presented do not account for uncontrollable conditions such as plumbing leaks, improper subgrade preparation or improper fill material, presence of large trees close to the foundation or improper maintenance of the yard around the perimeter of the slab. The conclusions and recommendations contained in this report are based upon applicable standards of our practice in this geographic area at the time this report was prepared. No other warranty, expressed or implied, is made.

Field Test Procedures

Standard Penetration Test (SPT)

This test consists of driving the split spoon sampler (SS) into the ground using a standard weight slide hammer (140 lb. hammer) with 30 inches of fall. The sampler is driven 6 inches into the ground and then the number of blows to advance the sampler an additional 18 inches is counted. The amount of blows necessary to advance the sampler the last 12" is designated SPT value or N-value. The N-value provides an indication of the relative density of the subsurface soil and is used in empirical geotechnical correlation to estimate relative density and shear strength of the soils (Table I). The procedure follows ASTM D3441 - ASTM D1586.

Table I. Correlation between the SPT N-value, Friction Angle and Relative Density

N-value	Density	Relative Density (%)	Friction Angle
< 4	Very Loose	<20	<30
4-10	Loose	20-40	30-35
10-30	Compact	40-60	35-40
30-50	Dense	60-80	40-45
> 50	Very Dense	>80	>45

Laboratory Tests

Laboratory tests were performed on selected samples to aid in soil classification and to evaluate physical properties of the soils, which may affect the geotechnical aspects of project design and construction. A description of the laboratory testing program is presented below.

Sieve Analysis

Sieve analyses were performed to evaluate the gradation characteristics of the material and to aid in soil classification. Tests were performed in general accordance with ASTM Test Method C 136 and D 2487.

Atterberg Limits

Atterberg Limits tests were performed to aid in soil classification and to evaluate the plasticity characteristics of the material. Additionally, test results were correlated to published data to evaluate the shrink/swell potential of near-surface site soils. Tests were performed in general accordance with ASTM Test Method D 4318. Atterberg Limits refer to the following:

Liquid Limit (LL): water content corresponding to the behavior change between the liquid and plastic states of silt or clay.

Plastic Limit (LL): water content corresponding to the behavior change between the plastic and semisolid states of silt or clay.

Shrinkage Limit (SL): water content corresponding to the transition from semisolid to solid state of silt or clay.

Moisture Content

Moisture content tests were performed to evaluate moisture-conditioning requirements during site preparation and earthwork grading. Moisture content was evaluated in general accordance with ASTM Test Method D 2216.

Moisture-Density

Standard proctor tests were performed on bulk soil samples to evaluate maximum dry density and optimum moisture content. Test procedures were in general accordance with ASTM Test Method D 2937.

15. References

1. American Society of Civil Engineers (ASCE), Texas Section, Recommended Practice for The Design of Residential Foundations, Version 1, January 1, 2003.
2. American Concrete Institute (ACI) 302.1R-04, Guide for Concrete Floor and Slab Construction.
3. American Society of Civil Engineers (ASCE), Texas Section, Guidelines for the Evaluation and Repair of Residential Foundations, Version 1, January 1, 2003.
4. Post-Tensioning Institute. Design of Post-Tensioned Slabs-on-Ground.3rd ed. USA, with 2008 Addendum, Post-Tension Institute, Phoenix, Arizona.
5. Criteria for Selection and Design of Residential Slab-On-Ground, Report#33 to the Federal Housing Administration, Publication 1571, National Academy of Sciences, Washington, D.C., 1968.
6. Design of Slab-On-Ground Foundations. Walter L. Snowden. Wire Reinforcement Institute (WRI). August 1981 and March 1996 (Update).
7. Das, B. M., Advanced Soil Mechanics, McGraw-Hill Company, New York. 1987.
8. Das, B. M., Principles of Geotechnical Engineering, PWS-Kent Publishing Company, Boston, MA, 665 p. 1990.Geologic Map of Texas, Austin Sheet, Bureau of Economic Geology, The University of Texas at Austin. 1981.
9. Geologic Map of Texas, Austin Sheet, Bureau of Economic Geology, The University of Texas at Austin. 1981.

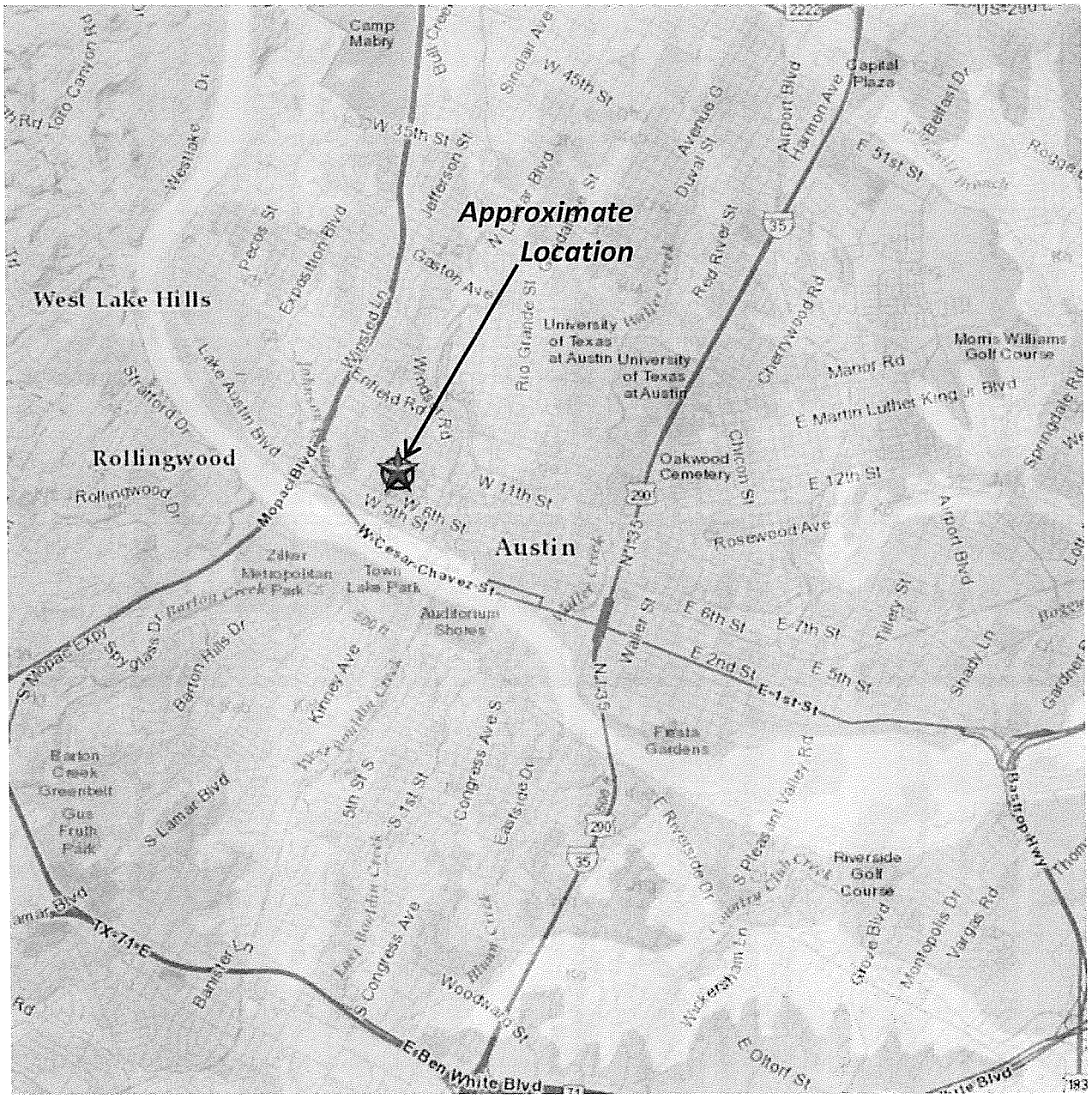

Figure 1. Partial Geological Map. Geologic Map of Texas, Austin Sheet, Bureau of Economic Geology, The University of Texas at Austin. 1981.

Figure 2. Location Map (approximate).

SEC SOLUTIONS

PROJECT NAME: 802 Pressler St., Austin, TX 78703
PROJECT ADDRESS: 802 Pressler St., Austin, TX 78703
CLIENT: Caroline Elizondo

BORING No.: B-1
BORING DEPTH: 15 FT

DEPTH (FT)	SAMPLE TYPE	SYMBOL	SPT FIELD DATA: N (blows per ft) STRENGTH (TSF) Texas Cone Penetrometer	SOIL DESCRIPTION	LIQUID LIMIT (%)	PLASTICITY INDEX (%)	MOISTURE CONTENT (%)	UNCONFINED COMPRESSIVE STRENGTH (pcf)	PERCENTAGE PASSING #200 SIEVE	PERCENTAGE FINER THAN 2μ
	SS		(1-2-1) N=3	CLAY (CL): brown, soft, tanish						
	ST				41	23	18			
	SS		(1-2-3) N=5							
5				CLAY (CL-CH): yellowish brown, w/ small rocks, hard	49	22	18			
10	ST						18			
15							16			
	SS		(9-13-15) N=28							
20										
25										

KEY TO SYMBOLS	
SS	SPLIT SPOON SAMPLER
ST	SHELBY TUBE SAMPLER
A	AUGER SAMPLE
SPT	STANDARD PENETRATION TEST
WL	WATER LEVEL
▽	APPROXIMATE GROUND WATER LEVEL

OBS: HEAVY HORIZONTAL LINES REPRESENT APPROXIMATE BOUNDARY OF EACH STRATUM AT THE LOCATION OF FIELD BORING

	LIMESTONE, WEATHERED
	LIMESTONE, INTACT

PROJECT No.: 16490
PROJECT DATE: 03/29/2017
FIELD WORK DATE: 03/20/2017

MAJOR DIVISIONS			GROUP SYMBOLS	TYPICAL NAMES
COARSE GRAINED SOILS More than 50% retained on No.200 Sieve	**GRAVELS** *50% or more of coarse fraction retained on No.4 Sieve*	CLEAN GRAVELS	GW	*Well-graded Gravels, Gravel-Sand mixtures, Little or no fines.*
			GP	*Poorly-graded gravels, Gravel-Sand mixtures, Little or no fines.*
		GRAVELS WITH FINES	GM	*Silty Gravels, Gravel-Sand-Silt Mixtures*
			GC	*Clayey Gravels, Gravel-Sand-Clay Mixtures*
	SANDS *More than 50% of coarse fraction passes No.4 Sieve*	CLEAN SANDS	SW	*Well-Graded Sands, Gravelly Sands, Little or no fines*
			SP	*Poorly Graded Sands, Gravely Sands, little or no fines*
		SANDS WITH FINES	SM	*Silty Sands, Sand-Silt Mixtures*
			SC	*Clayey Sands, Sand-Clay Mixtures*
FINE GRAINED SOILS 50% or more passes No.200 Sieve	**SILTS AND CLAYS** *Liquid Limit (LL) 50% or Less*		ML	*Inorganic Silts, Very Fine Sands, Rock Flour, Silty or Clayey Fine Sands or Clayey Silts with Slight Plasticity*
			CL	*Inorganic Clays of Low to Medium plasticity, Gravely Clays, Sandy Clays, Silty Clays, Lean Clays*
			OL	*Organic Silts and Organic Silty Clays of Low Plasticity*
	SILTS AND CLAYS *Liquid Limit (LL) greater than 50%*		MH	*Inorganic Silts*
			CH	*Inorganic Clays of High Plasticity, Fat Clays*
			OH	*Organic Clays of Medium to High Plasticity, Organic Silts*
HIGHLY ORGANIC SOILS			PT	*Peat, muck and other highly organic soils*

GW	$C_u = \frac{D_{60}}{D_{10}}$ greater than 4; $C_c = \frac{D_{30}^2}{D_{10} \times D_{60}}$ between 1 and 3;	
GP	Not meeting all the criteria for GW	
GM	Atterberg Limits below "A" line or PI less than 4	Atterberg Limits above "A" line or PI between 4 and 7 are borderline cases requiring use of dual symb
GC	Atterberg Limits above "A" line or PI greater than 7	
SW	$C_u = \frac{D_{60}}{D_{10}}$ greater than 4; $C_c = \frac{D_{30}^2}{D_{10} \times D_{60}}$ between 1 and 3;	
SP	Not meeting all the criteria for SW	
SM	Atterberg Limits below "A" line or PI less than 4	Atterberg Limits in shaded zone with PI between 4 an are borderline cases requiring use of dual symb
SC	Atterberg Limits above "A" line or PI greater than 7	

Determine percentages of sand and gravel from grain size curve. Depending on percentage of fines (fraction smaller than No. 200 Sieve Size), coarse-grained s are classified as follows:

Less than 5 percent ..... GW, GP, SW
More than 12 percent ..... GM, GC, SM
Between 5 and 12 percent ..... Dual Symbols (e.g.: SM

Cu: Coefficient of Uniformity Cc: Coefficient of Gradation/Curvature

GRAIN SIZE TERMINOLOGY	
MAJOR COMPONENTS	PARTICLE SIZE
BOULDERS	> 12IN
COBBLES	3 IN TO 12 IN
GRAVEL	#4 SIEVE TO 3 IN
SAND	#200 SIEVE TO #4 SIEVE
SILT OR CLAY	PASSING #200 SIEVE

PLASTICITY DESCRIPTION	
NON-PLASTIC	PI = 0
LOW	1<PI<20
MEDIUM	20<PI<30
HIGH	PI>30

RELATIVE DENSITY	
N (BLOWS PER FT)	SANDS AND GRAVELS
0-4	VERY LOOSE
4-10	LOOSE
10-30	MEDIUM
30-50	DENSE
> 50	VERY DENSE

CONSISTENCY	
N (BLOWS PER FT)	SILT AND CLAYS
< 2	VERY SOFT
2 - 4	SOFT
4 - 8	MEDIUM
8 - 15	STIFF
15 - 30	VERY STIFF
> 30	HARD

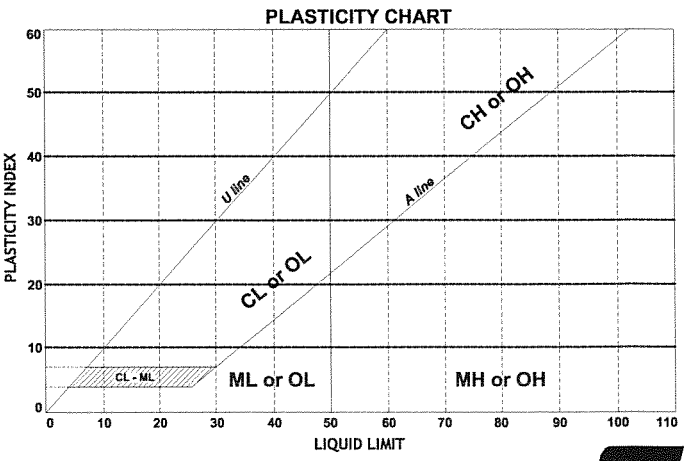

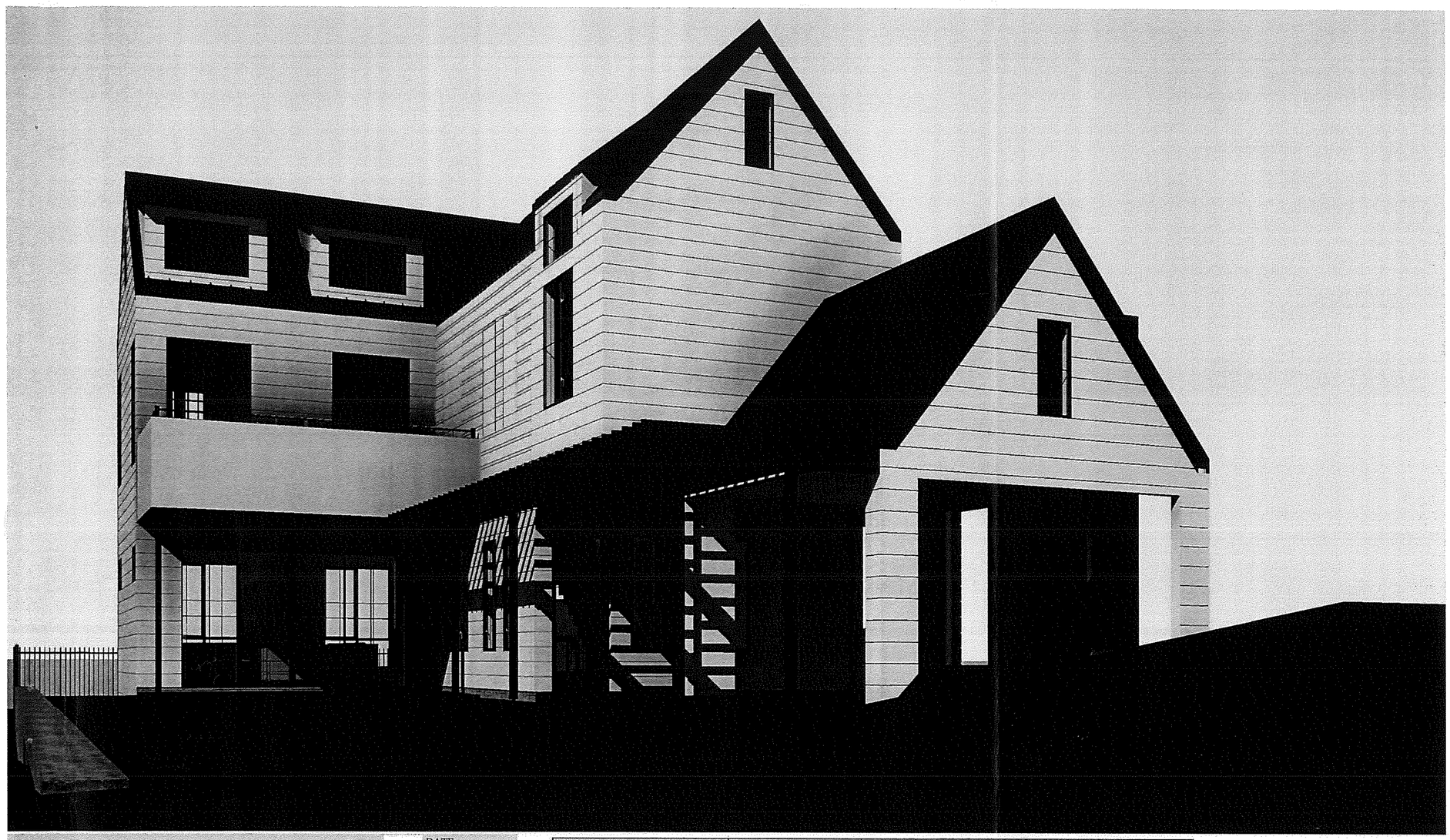

							DATE
							10/10/2017
LOT SIZE	5143						
SITE DEVELOPMENT INFORMATION							
		EXISTING SQ FT		NEW SQ FT		TOTAL SQ FT	
		Bldg 1	Bldg 2	Bldg 1	Bldg 2	Bldg 1	Bldg 2
a	1st floor conditioned area	0	0	1065	0	1,065.0	0.0
b	2nd floor conditioned area	0	0	1217	0	1,217.0	0.0
c	3rd floor conditioned area	0	0	612	0	612.0	0.0
d	Basement	0	0	1051	0	1,051.0	0.0
e	Attached Covered Parking (Garage or Carport)	0	0	279	0	279.0	0.0
f	Detached Covered Parking	0	0	0	0	0.0	0.0
g	Covered Wood Deck 100%	0	0	0	0	0.0	0.0
h	Covered Patio/Porch	0	0	446	0	446.0	0.0
i	Balcony	0	0	170	0	170.0	0.0
j	Other- Specify:			0			
Total Gross Building Area		0	0	4840	0	4,840.0	0.0
Building Coverage Information		0	0	1790	0	1,790.0	0.0
	Total Building Coverage						1,790.0
	Percentage of lot size						34.80%

IMPERVIOUS		EXISTING	NEW	TOTAL
k	Driveway	0	152	152.0
l	Sidewalks	0	0	0.0
m	Uncovered Patio	0	46	46.0
n	Uncovered Wood Deck (50%)	0	0	0
o	AC pads/ Pool equipment	0	18	18.0
p	Other (Pool Coping/Retaining wall)	0	156	156.0
Impervious cover Information		0	2162	2,162.0
	Percentage of lot size	0.00%	42.04%	42.04%

FAR	Existing	New	Prop Exemption	Applied Exemption	Total
1st Floor	0	1,065.0			1,065.0
2nd Floor	0	1,217.0			1,217.0
3rd Floor	0	0			0.0
Area w ceilings >15'			Follow Article 3.3.5.		0.0
Ground Floor Porch		0	Full Porch sq ft 3.3.3 A 200 sq ft 3.3.3 A 2	0	0.0
Basement	0	1098	Art. 3.3.3 B	1098	0.0
Attic	0	634	Art. 3.3.3 C	634	0.0
Garage					
Attached	0	0	200 sq ft 3.3.2 B 2b	0	0.0
Detached	0	0	450 Sq ft 3.3.2 A1/2a 200 sq ft. 3.3.2 B 2a	0	0.0
Carport					
Attached	0	281	450 sq ft 3.3.2 A3 200 sq ft 3.3.2 B 1	281	0.0
Detached	0		450 sq ft 3.3.2 A 1		0.0
Accessory Buildings					
Detached	0	0			0.0
Total FAR					2,282.0
					44.37%
Allowed FAR					2,300.0

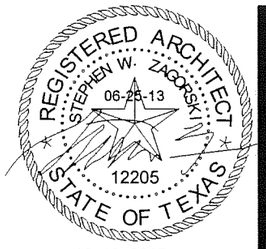

10/10/2017

FOR PERMITTING ONLY NOT FOR CONSTRUCTION OR BIDDING PURPOSES

COPYRIGHT 2015 * STEPHEN ZAGORSKI, ARCHITECT * THESE DRAWINGS ARE INSTRUMENTS OF PROFESSIONAL SERVICE AND ARE LICENSED FOR A SINGLE CONSTRUCTION PROJECT.

STEVE ZAGORSKI
ARCHITECT

PRESSLER

802 PRESSLER, AUSTIN, TX 78703

PROJECT NO:	2016
DRAWN BY:	
CHECKED BY:	
ISSUE DATE:	10/10/2

DRAWING TITLE

COVER

DRAWING NO

P 0.

AE APPROVED
303-508
OCT 30 2017
MCP

REGISTERED ARCHITECT
STEPHEN W. ZAGORSKI
06-25-13
12205
STATE OF TEXAS

10/10/2017

802 PRESSLER

BACK OF CURB

BENCHMARK @ 533.0

PROPERTY LINE
S30°36'41"W50.08'

PROPERTY LINE
N30°25'25"E 49.87'

BEGINNING OF PRINCIPAL STRUCTURE

40' - 0"
BUILDING TENT 1

38' - 0 1/4"
BUILDING TENT 2

24' - 11 7/8"
49' - 0"
17' - 11"
11' - 0 7/8"

RETAINING WALL
156 SF

PROPERTY LINE
N60°00'00"W102.98'

5' B.L.

R 8' - 0"
R 4' - 0"
8" HACKBERRY
1/2 CRZ
R 14' - 0"
4" HACKBERRY
R 7' - 0"
1/2 CRZ
R 11' - 0"
11" HACKBERRY
R 5' - 6"
1/2 CRZ

530.4
529.6
529.0
LP AG 529.2
HP AG 533.1
533.6
535.0
531.6
531.1

2 1/2" / 12"
6' - 3 1/2"
6' - 3"
6' - 3"
6' - 0 3/8"

PAYING FEE-IN-LIEU/ SIDEWALK

1 5/8" / 12"

POOL COPING = 46 SF

STEEL EDGE AND CRUSHED GRANITE STEPS

9' - 11 1/2"

COVERED PATIO
165 SF

AVERAGE ADJ GRADE: 531.1'

GRASS

25' B.L.

PERGOLA 220SF /2=110 SF

COVERED PATIO
171 SF

CARPORT
279 SF
17' - 6"

PARKING SPOT 1
8' - 6"

802 PRESSLER ST
TWO STORY WOOD FRAME CONSTRUCTION
WITH ATTIC & BASEMENT
1065 SF BUILDING FOOTPRINT
50X103 FT OLT 3 DIVISION Z
FINISHED FLOOR@ 531.5

GRAVEL

DRIVEWAY = 152 SF

50' - 1"
38' - 6"
38' - 7"
38' - 7"
38' - 7"
12' - 0"
3' - 0"
2' - 0"
3' - 0"
49' - 10 1/2"
10' B.L.
5' - 3"

R 13' - 0"
13" HACKBERRY
R 6' - 6"
1/2 CRZ
R 5' - 0"
1/2 CRZ
R 1 '0-0 "
1 0H'ACKBERRY

PROPERTY LINE
S60°07'08"E103.15'

A/C
A/C
18 SF

5' - 3 1/2"
5' - 3"
5' - 3"

25' - 7 1/2"
28' - 9"
103' - 1 3/4"
20' - 2 1/2"
17' - 11"
10' - 7 3/4"

H TEN T
HP TENT 2

All structures must maintain 7'6" clearance from AE energized distribution power lines. Enforced by AE and NESC codes-this review DOES NOT include transmission power lines.

All structures/pool/etc. Must maintain a 10'OH Horizontal clearance from AE energized power lines.

REVIEWED
OCT 30 2017
AUSTIN WATER UTILITY
CONSUMER SERVICE DIVISION - TAPS

FOR PERMITTING ONLY NOT FOR CONSTRUCTION OR BIDDING PURPOSES

1 P- SITE PLAN
1/8" = 1'-0"

TRUE

COPYRIGHT 2015 * STEPHEN ZAGORSKI, ARCHITECT * THESE DRAWINGS ARE INSTRUMENTS OF PROFESSIONAL SERVICE AND ARE LICENSED FOR A SINGLE CONSTRUCTION PROJECT.

STEVE ZAGORSKI
ARCHITECT

PRESSLER
802 PRESSLER, AUSTIN, TX 78703

PROJECT NO:	2016_
DRAWN BY:	
CHECKED BY:	
ISSUE DATE:	10/10/20

DRAWING TITLE
SITE PLAN

DRAWING NO
P 1.0

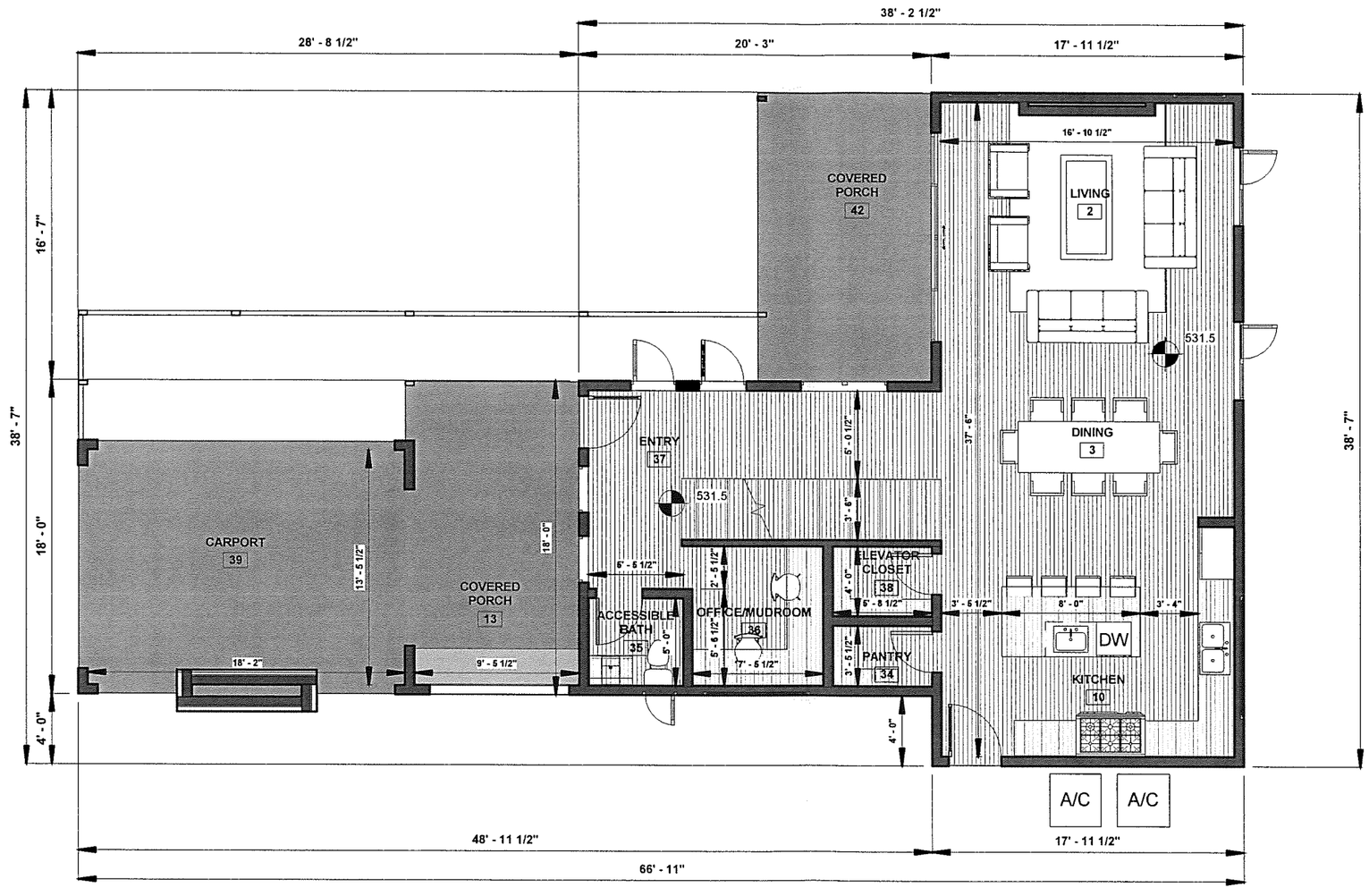

1 P- LEVEL 1
1/8" = 1'-0"

TRUE

FOR PERMITTING ONLY NOT FOR CONSTRUCTION OR BIDDING PURPOSES

COPYRIGHT 2015 * STEPHEN ZAGORSKI, ARCHITECT * THESE DRAWINGS ARE INSTRUMENTS OF PROFESSIONAL SERVICE AND ARE LICENSED FOR A SINGLE CONSTRUCTION PROJECT.

REGISTERED ARCHITECT
STEPHEN W. ZAGORSKI
06-28-13
12205
STATE OF TEXAS
10/10/2017

STEVE ZAGORSKI
ARCHITECT

PRESSLER

802 PRESSLER, AUSTIN, TX 78703

PROJECT NO:	2016
DRAWN BY:	
CHECKED BY:	
ISSUE DATE:	10/10/2

DRAWING TITLE

FLOOR PLANS

DRAWING NO

P 2.0

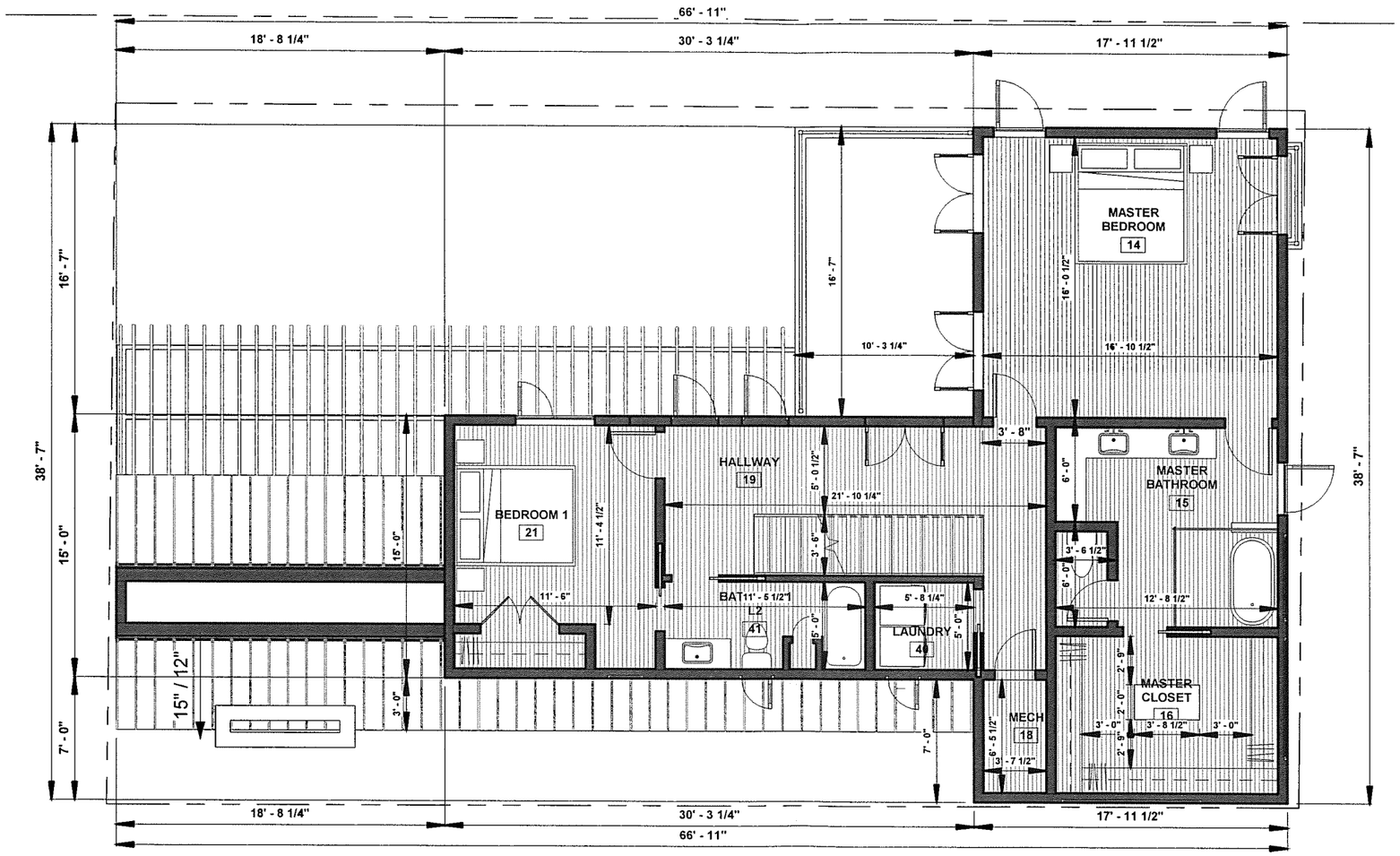

1 P- LEVEL 2
1/8" = 1'-0"

TRUE

FOR PERMITTING ONLY NOT FOR CONSTRUCTION OR BIDDING PURPOSES

COPYRIGHT 2015 * STEPHEN ZAGORSKI, ARCHITECT * THESE DRAWINGS ARE INSTRUMENTS OF PROFESSIONAL SERVICE AND ARE LICENSED FOR A SINGLE CONSTRUCTION PROJECT.

REGISTERED ARCHITECT
STEPHEN W. ZAGORSKI
06-25-13
12205
STATE OF TEXAS
10/10/2017

STEVE ZAGORSKI
ARCHITECT

PRESSLER
802 PRESSLER, AUSTIN, TX 78703

PROJECT NO:	2016
DRAWN BY:	
CHECKED BY:	
ISSUE DATE:	10/10/2

DRAWING TITLE
FLOOR PLANS

DRAWING NO
P 2.1

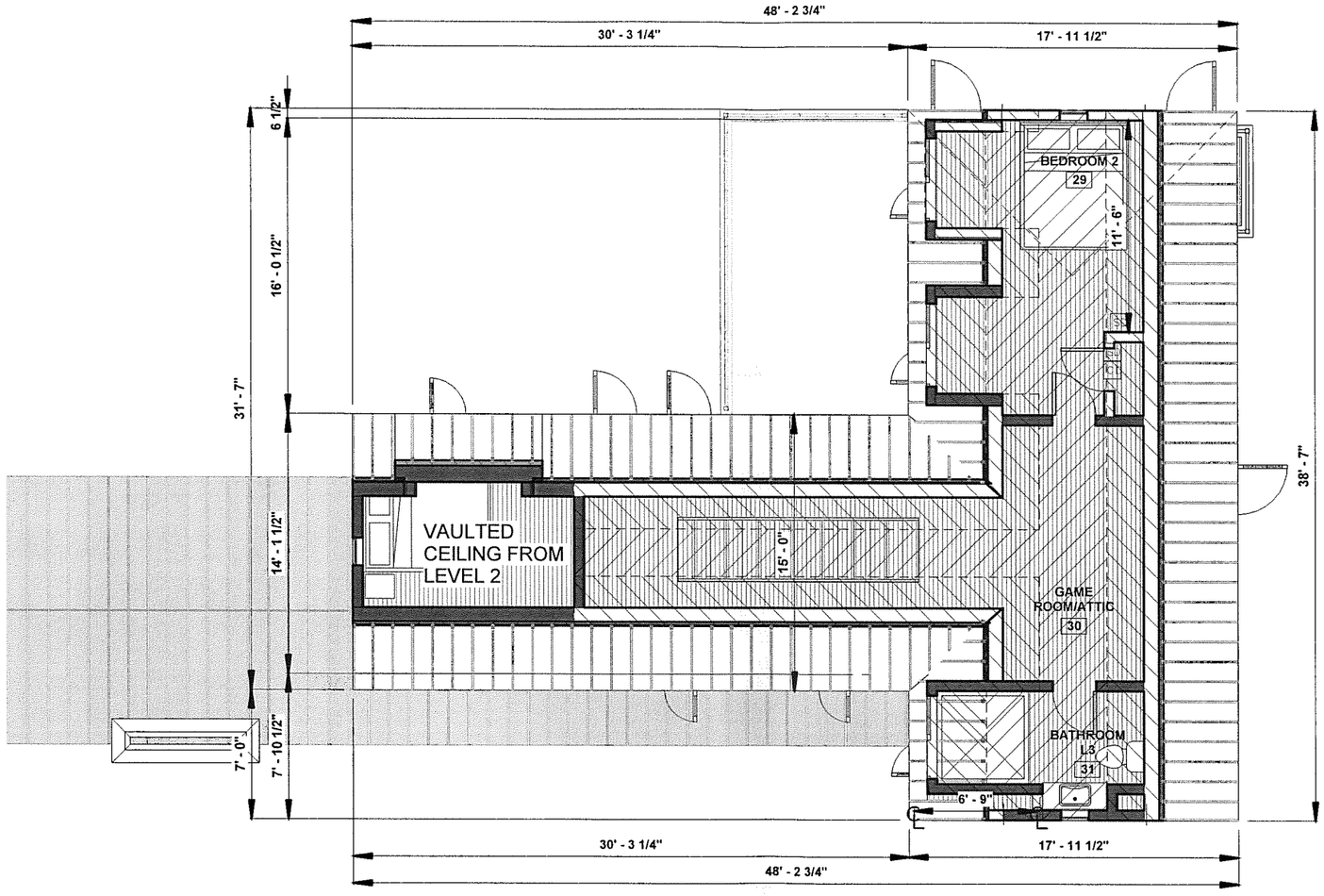

1 P- LEVEL 3
1/8" = 1'-0"

AREA OF 5 - 7 ' HEIGHT = 361 SF
AREA OF > 7 ' HEIGHT = 251 SF
TOTAL AREA = 612 SF

TRUE

FOR PERMITTING ONLY NOT FOR CONSTRUCTION OR BIDDING PURPOSES

COPYRIGHT 2015 * STEPHEN ZAGORSKI, ARCHITECT * THESE DRAWINGS ARE INSTRUMENTS OF PROFESSIONAL SERVICE AND ARE LICENSED FOR A SINGLE CONSTRUCTION PROJECT.

REGISTERED ARCHITECT
STEPHEN W. ZAGORSKI
06-28-13
12205
STATE OF TEXAS
10/10/2017

STEVE ZAGORSKI
ARCHITECT

PRESSLER

802 PRESSLER, AUSTIN, TX 78703

PROJECT NO:	2016
DRAWN BY:	
CHECKED BY:	
ISSUE DATE:	10/10/2

DRAWING TITLE

FLOOR PLANS

DRAWING NO

P 2.1

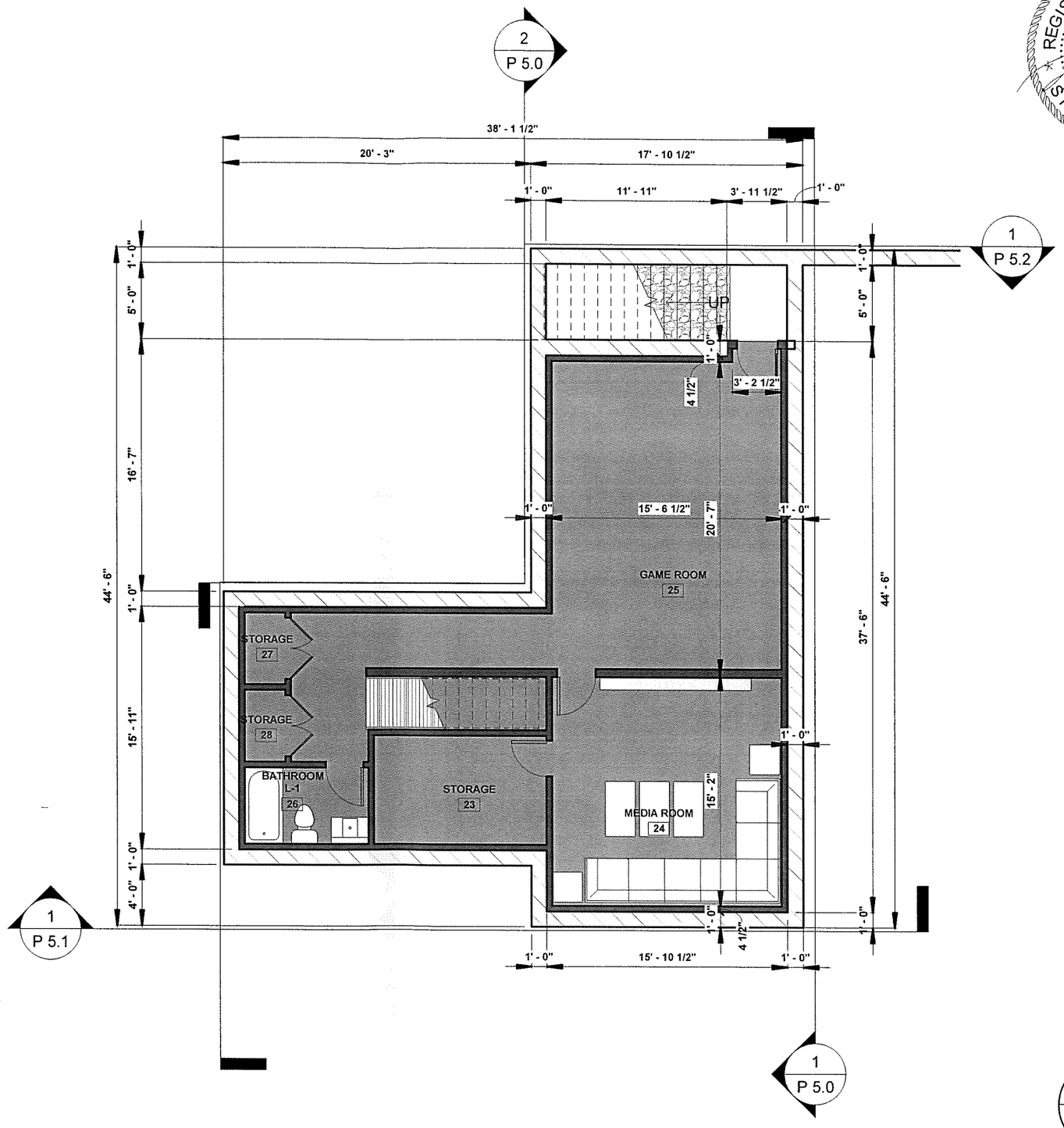

1 P- BASEMENT
1/8" = 1'-0"

TRUE

FOR PERMITTING ONLY NOT FOR CONSTRUCTION OR BIDDING PURPOSES

COPYRIGHT 2015 * STEPHEN ZAGORSKI, ARCHITECT * THESE DRAWINGS ARE INSTRUMENTS OF PROFESSIONAL SERVICE AND ARE LICENSED FOR A SINGLE CONSTRUCTION PROJECT.

REGISTERED ARCHITECT
STEPHEN W. ZAGORSKI
06-25-13
12205
STATE OF TEXAS

10/10/2017

STEVE ZAGORSKI
ARCHITECT

PRESSLER

802 PRESSLER, AUSTIN, TX 78703

PROJECT NO:	2016
DRAWN BY:	
CHECKED BY:	
ISSUE DATE:	10/10/2

DRAWING TITLE

FLOOR PLANS

DRAWING NO

P 2.1

NOTES:
PROVIDING VISITABILITY COMPLIANCE:

A.1. VISITABLE BATHROOM

1. MINIMUM DOOR SIZE: A minimum clear opening of 30" is to be provided (has a 32" door).
2. GRAB BAR PROVISION: lateral 2"x6" nominal wood blocking is to be installed flush with stud edges of bathroom walls.
3. The centerline of the blocking is to be 34" from and parallel to the interior floor level, except for the portion of the wall located directly behind lavatory.

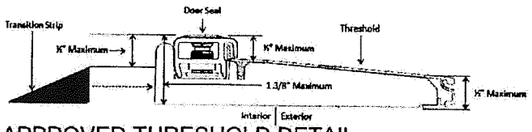

APPROVED THRESHOLD DETAIL
N.T.S.
REFER TO CODE INTERPRETATION CI2013-0002 FOR ADDITIONAL INFORMATION.
IF FOUNDATION PLAN SHOWS MORE THAN A 1-1/2" DROP, DESIGN PROFESSIONAL MUST PROVIDE THRESHOLD DETAIL.

A.2. VISITABLE LIGHT SWITCHES

1. Light switches and environmental controls are no higher than 48" above the interior floor level.
2. Outlets and receptacles are to be a minimum of 15" above the interior floor level, except for floor outlets and receptacles.

A.3. VISITABILITY BATHROOM ROUTE

1.Bathroom to be accessibly by a route with a minimum clear opening of 32" beginning at the visitable entrance designated under Section 320.6 and continues through the living room, dining room and kitchen, and will be level with ramped or beveled changes at door threshold.

A.4. VISITABLE DWELLING ENTRANCE

1. Dwelling will be accessible by at least one no step entrance with a beveled threshold less than 1/2" and a door with a clear width of at least 32".

REGISTERED ARCHITECT
STEPHEN W. ZAGORSKI
06-25-13
12205
STATE OF TEXAS
10/10/2017

VISITABLE ENTRANCE
- DOOR 2'-8" X 8'-0"
- VISITABLE NO-STEP ENTRY MAX 1/2" BEVELED THRESHOLD
- LANDING SLOPE 1/4" / FT MAX

VISITABLE BATHROOM
- DOOR 2'-8" X 8'-0"
- 2 X 6 BLOCKING CENTERLINE AT 34" ABOVE FINISH FLOOR [EXCEPT BEHIND LAVATORY]

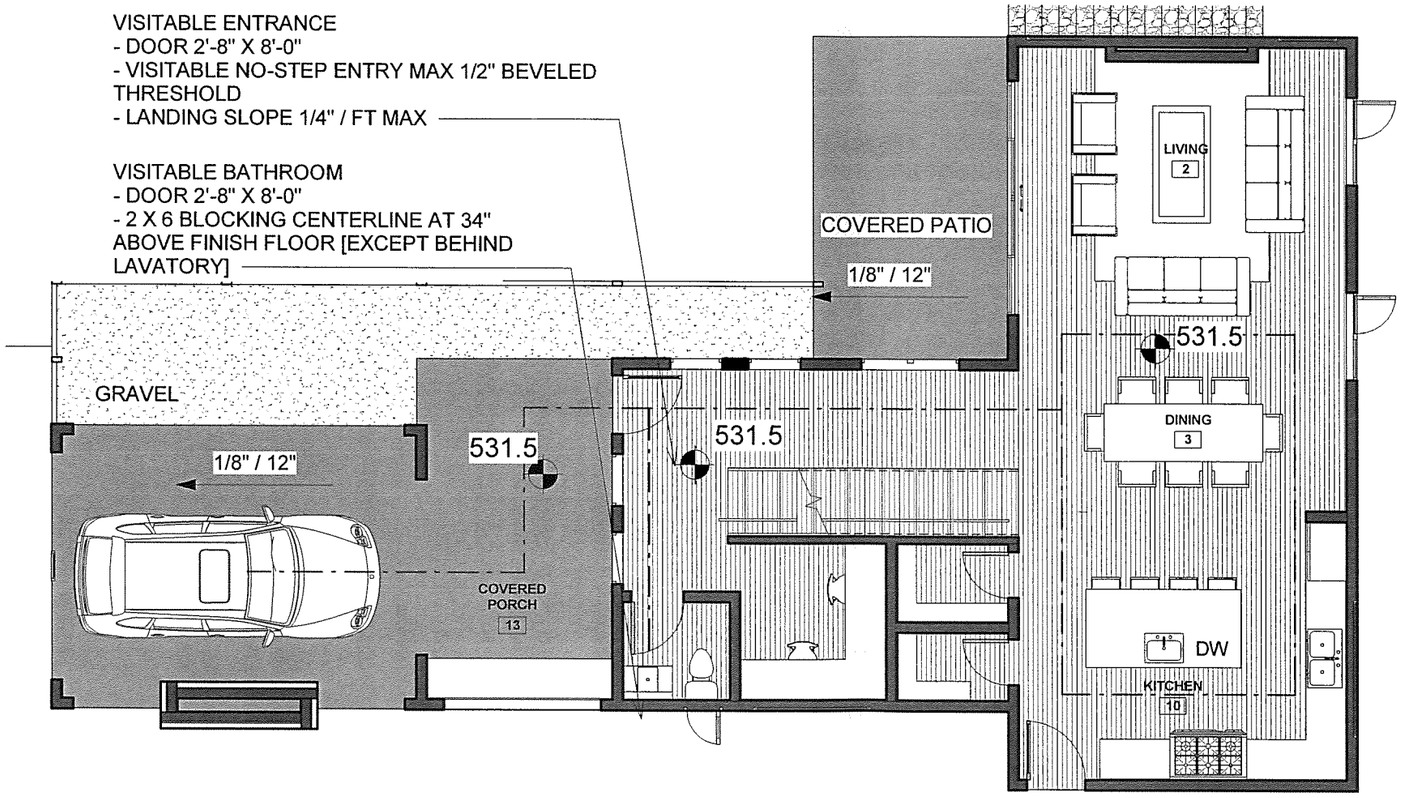

1 P- VISITABILITY PLAN
1/8" = 1'-0"

TRUE

FOR PERMITTING ONLY NOT FOR CONSTRUCTION OR BIDDING PURPOSES

COPYRIGHT 2015 * STEPHEN ZAGORSKI, ARCHITECT * THESE DRAWINGS ARE INSTRUMENTS OF PROFESSIONAL SERVICE AND ARE LICENSED FOR A SINGLE CONSTRUCTION PROJECT.

STEVE ZAGORSKI
ARCHITECT

PRESSLER
802 PRESSLER, AUSTIN, TX 78703

PROJECT NO:	2016
DRAWN BY:	
CHECKED BY:	
ISSUE DATE:	10/10/2

DRAWING TITLE
VISITABILITY PLAN

DRAWING NO
P 2.4

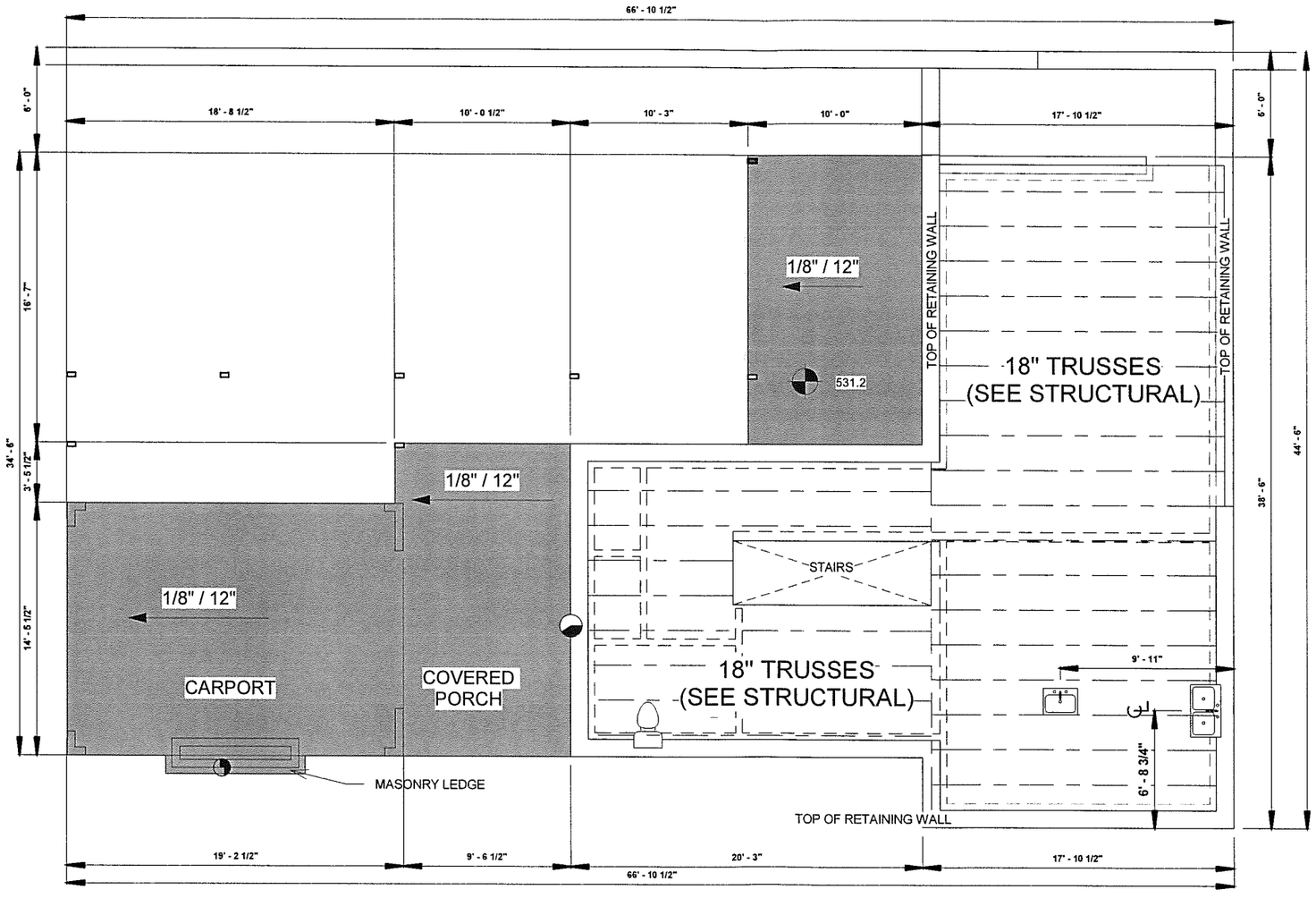

1 P- FOUNDATION LAYOUT
1/8" = 1'-0"

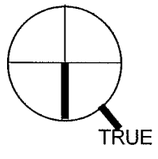

FOR PERMITTING ONLY NOT FOR CONSTRUCTION OR BIDDING PURPOSES

COPYRIGHT 2015 * STEPHEN ZAGORSKI, ARCHITECT * THESE DRAWINGS ARE INSTRUMENTS OF PROFESSIONAL SERVICE AND ARE LICENSED FOR A SINGLE CONSTRUCTION PROJECT.

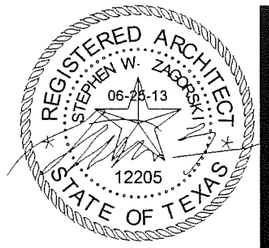

10/10/2017

STEVE ZAGORSKI
ARCHITECT

PRESSLER

802 PRESSLER, AUSTIN, TX 78703

PROJECT NO:	2016
DRAWN BY:	
CHECKED BY:	
ISSUE DATE:	10/10/2

DRAWING TITLE

FOUNDATION LAYC

DRAWING NO

P 3.0

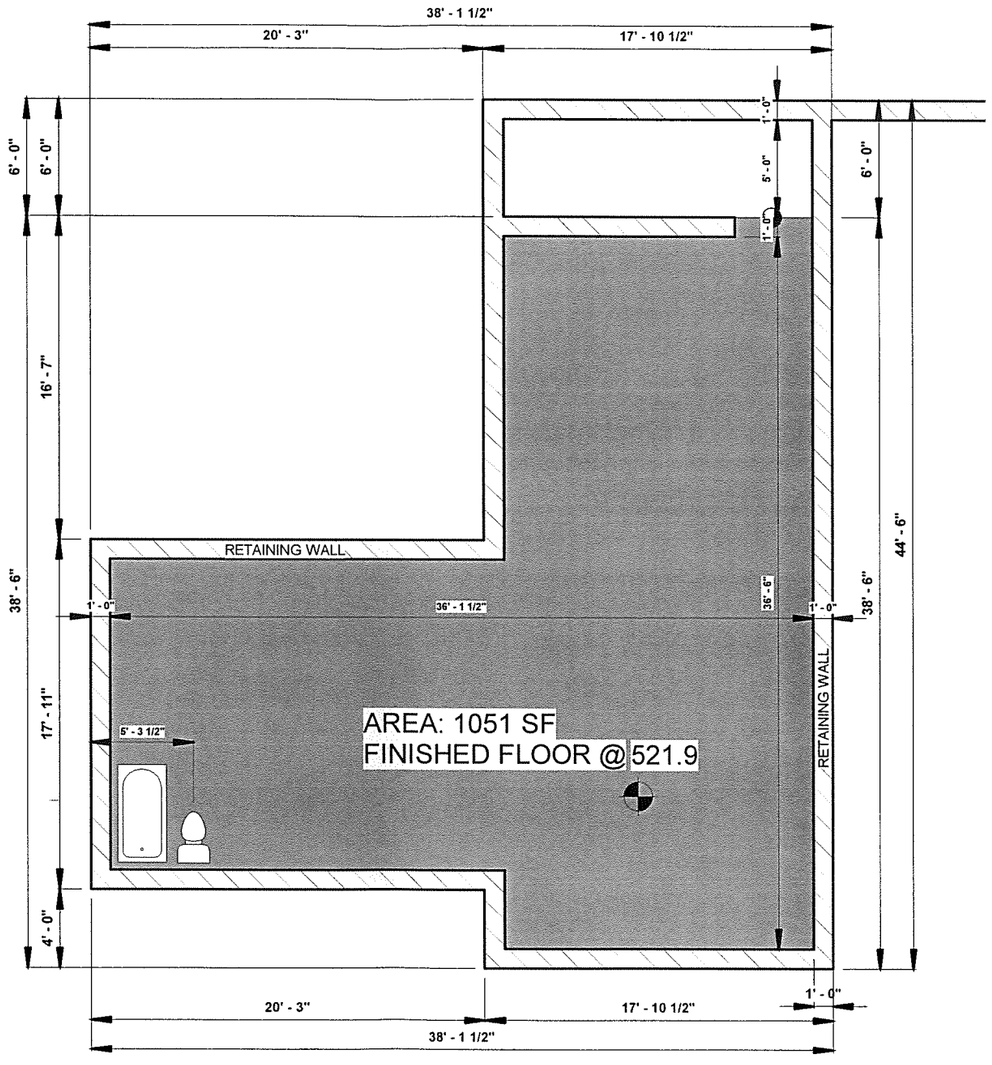

1 P- FOUNDATION BASEMENT
1/8" = 1'-0"

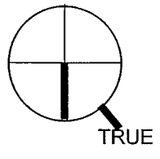

FOR PERMITTING ONLY NOT FOR CONSTRUCTION OR BIDDING PURPOSES

COPYRIGHT 2015 * STEPHEN ZAGORSKI, ARCHITECT * THESE DRAWINGS ARE INSTRUMENTS OF PROFESSIONAL SERVICE AND ARE LICENSED FOR A SINGLE CONSTRUCTION PROJECT.

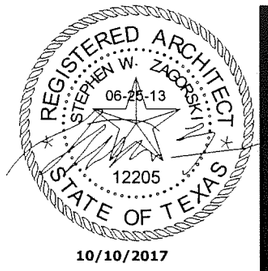

10/10/2017

STEVE ZAGORSKI
ARCHITECT

PRESSLER

802 PRESSLER, AUSTIN, TX 78703

PROJECT NO:	2016
DRAWN BY:	
CHECKED BY:	
ISSUE DATE:	10/10/2

DRAWING TITLE

FOUNDATION LAY
- BASEMENT

DRAWING NO

P 3.

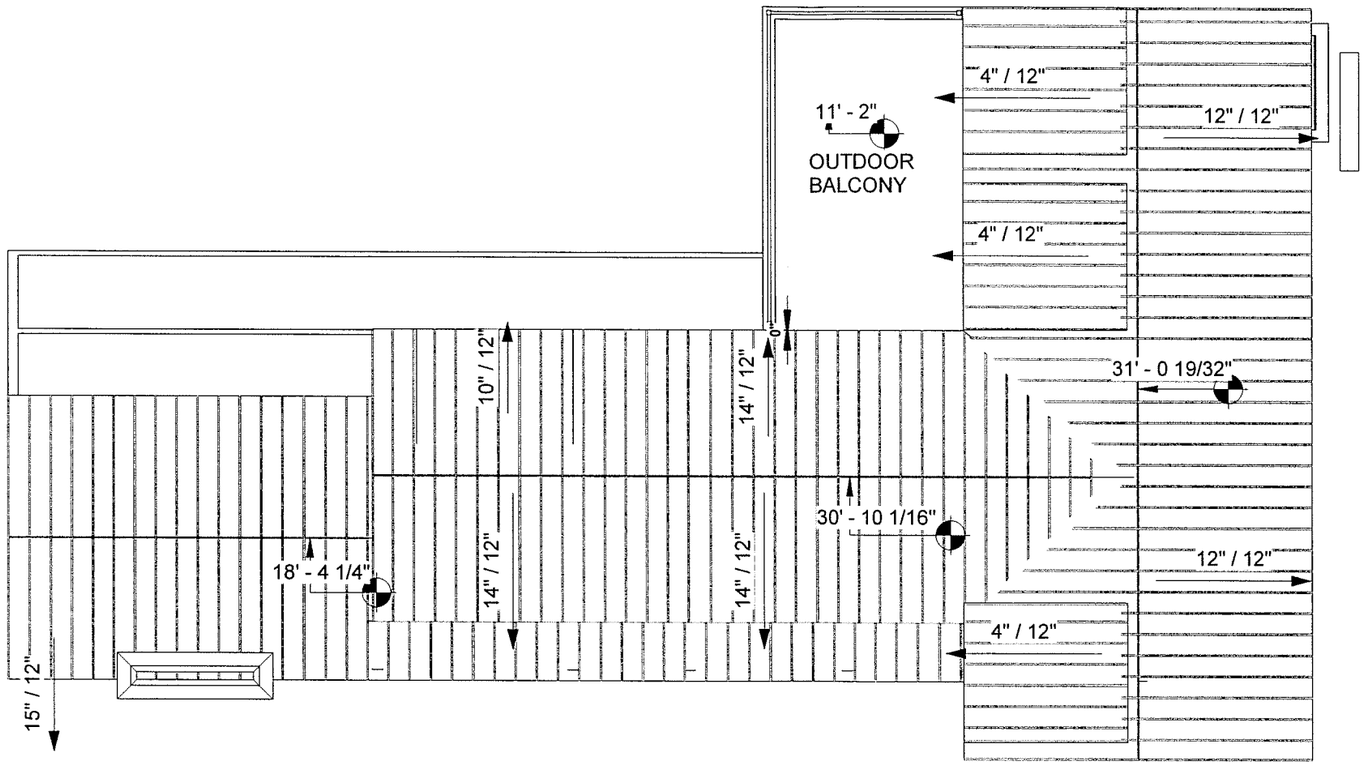

1 P- ROOF PLAN
1/8" = 1'-0"

TRUE

FOR PERMITTING ONLY NOT FOR CONSTRUCTION OR BIDDING PURPOSES

COPYRIGHT 2015 * STEPHEN ZAGORSKI, ARCHITECT * THESE DRAWINGS ARE INSTRUMENTS OF PROFESSIONAL SERVICE AND ARE LICENSED FOR A SINGLE CONSTRUCTION PROJECT.

REGISTERED ARCHITECT
STEPHEN W. ZAGORSKI
06-26-13
12205
STATE OF TEXAS
10/10/2017

STEVE ZAGORSKI
ARCHITECT

PRESSLER
802 PRESSLER, AUSTIN, TX 78703

PROJECT NO:	2016
DRAWN BY:	
CHECKED BY:	
ISSUE DATE:	10/10/2

DRAWING TITLE
ROOF PLAN

DRAWING NO
P 3.

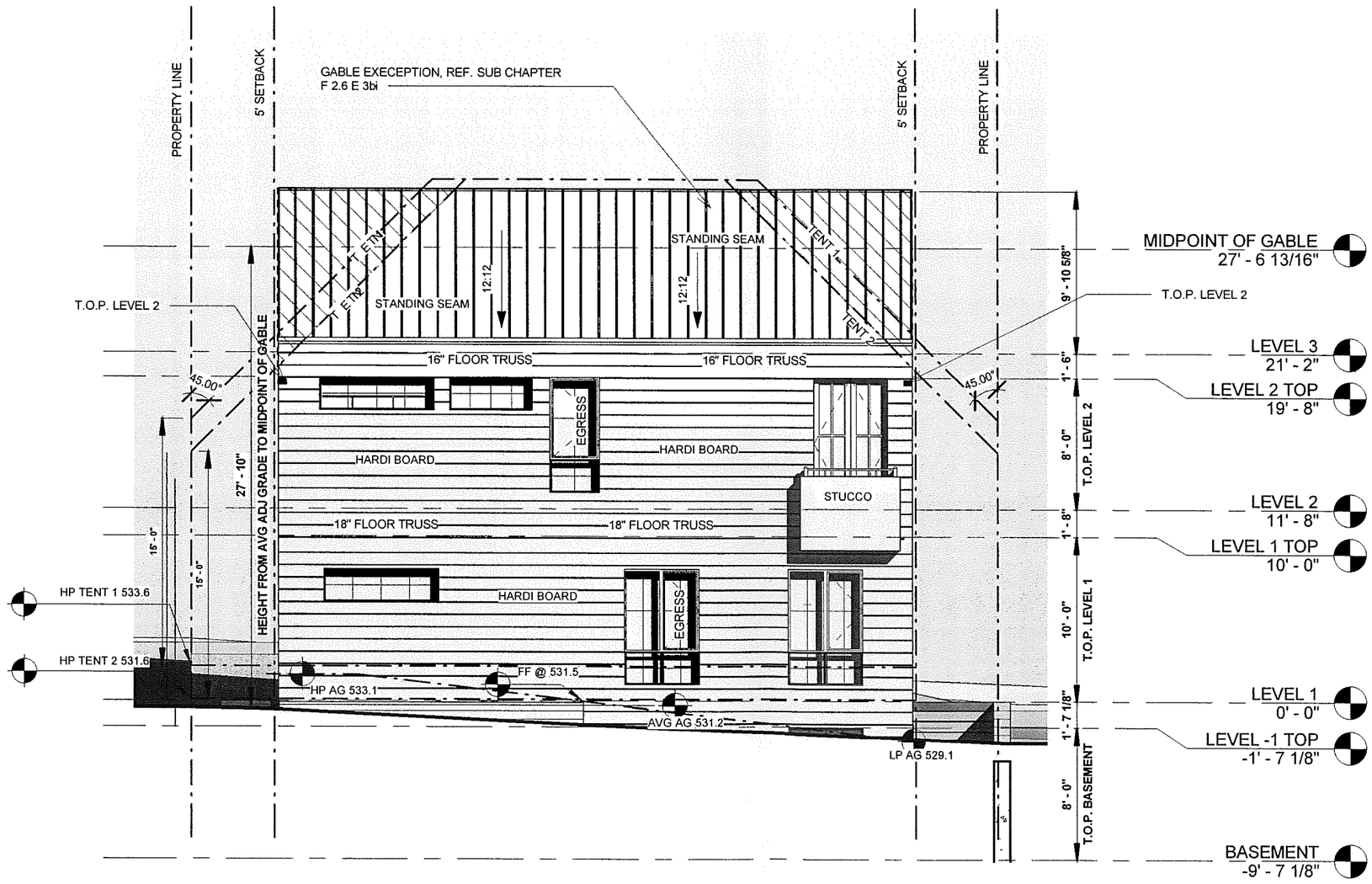

1 P- WEST ELEVATION
1/8" = 1'-0"

FOR PERMITTING ONLY NOT FOR CONSTRUCTION OR BIDDING PURPOSES

COPYRIGHT 2015 * STEPHEN ZAGORSKI, ARCHITECT * THESE DRAWINGS ARE INSTRUMENTS OF PROFESSIONAL SERVICE AND ARE LICENSED FOR A SINGLE CONSTRUCTION PROJECT.

REGISTERED ARCHITECT
STEPHEN W. ZAGORSKI
06-25-13
12205
STATE OF TEXAS

10/10/2017

STEVE ZAGORSKI
ARCHITECT

PRESSLER

802 PRESSLER, AUSTIN, TX 78703

PROJECT NO:	2016_
DRAWN BY:	
CHECKED BY:	
ISSUE DATE:	10/10/2

DRAWING TITLE

WEST ELEVATION

DRAWING NO

P 4.0

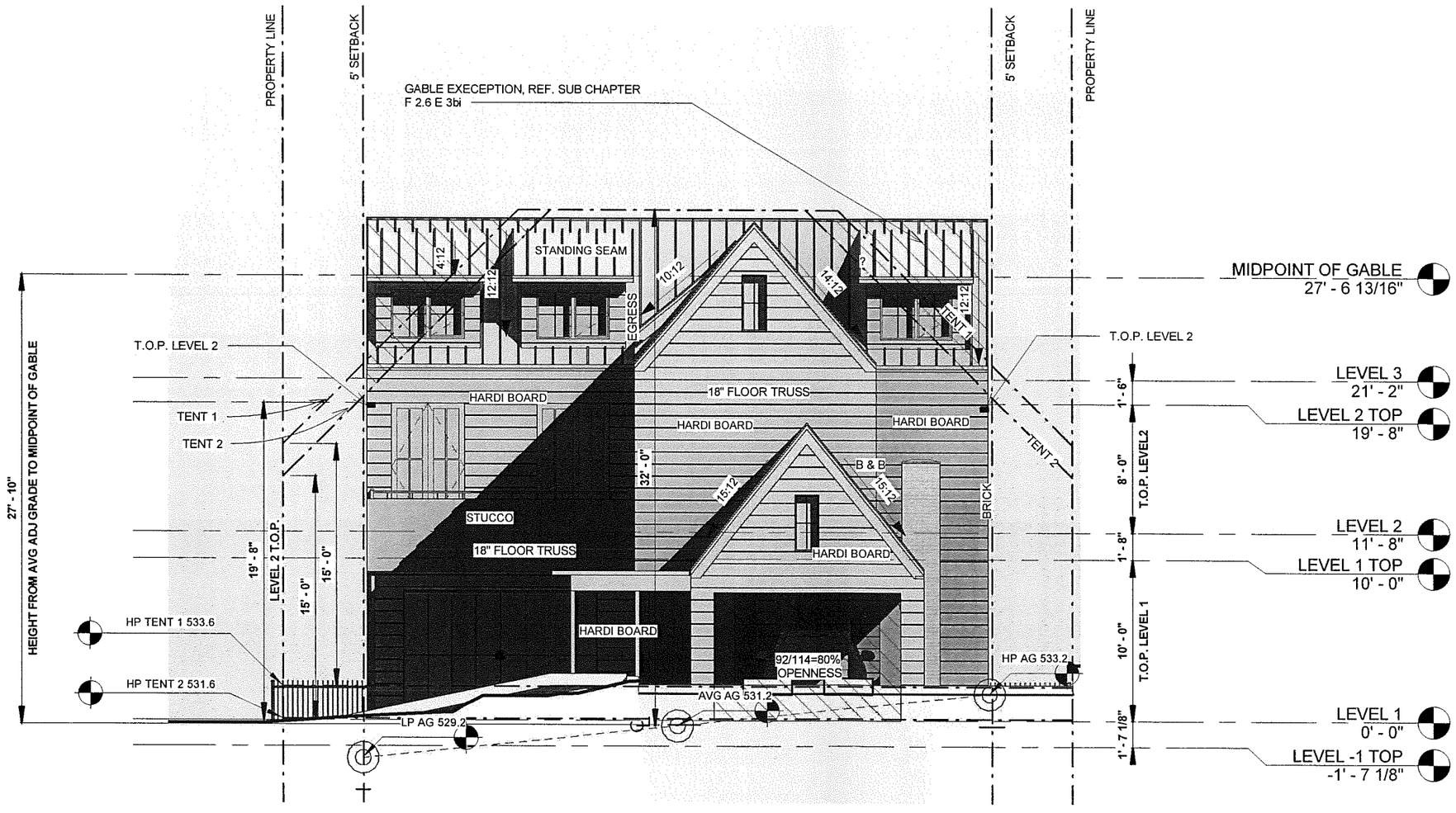

1 P- EAST ELEVATION
1/8" = 1'-0"

FOR PERMITTING ONLY NOT FOR CONSTRUCTION OR BIDDING PURPOSES

COPYRIGHT 2015 * STEPHEN ZAGORSKI, ARCHITECT * THESE DRAWINGS ARE INSTRUMENTS OF PROFESSIONAL SERVICE AND ARE LICENSED FOR A SINGLE CONSTRUCTION PROJECT.

REGISTERED ARCHITECT
STEPHEN W. ZAGORSKI
06-25-13
12205
STATE OF TEXAS
10/10/2017

STEVE ZAGORSKI
ARCHITECT

PRESSLER
802 PRESSLER, AUSTIN, TX 78703

PROJECT NO:	2016_
DRAWN BY:	
CHECKED BY:	
ISSUE DATE:	10/10/2

DRAWING TITLE
EAST ELEVATION

DRAWING NO
P 4.1

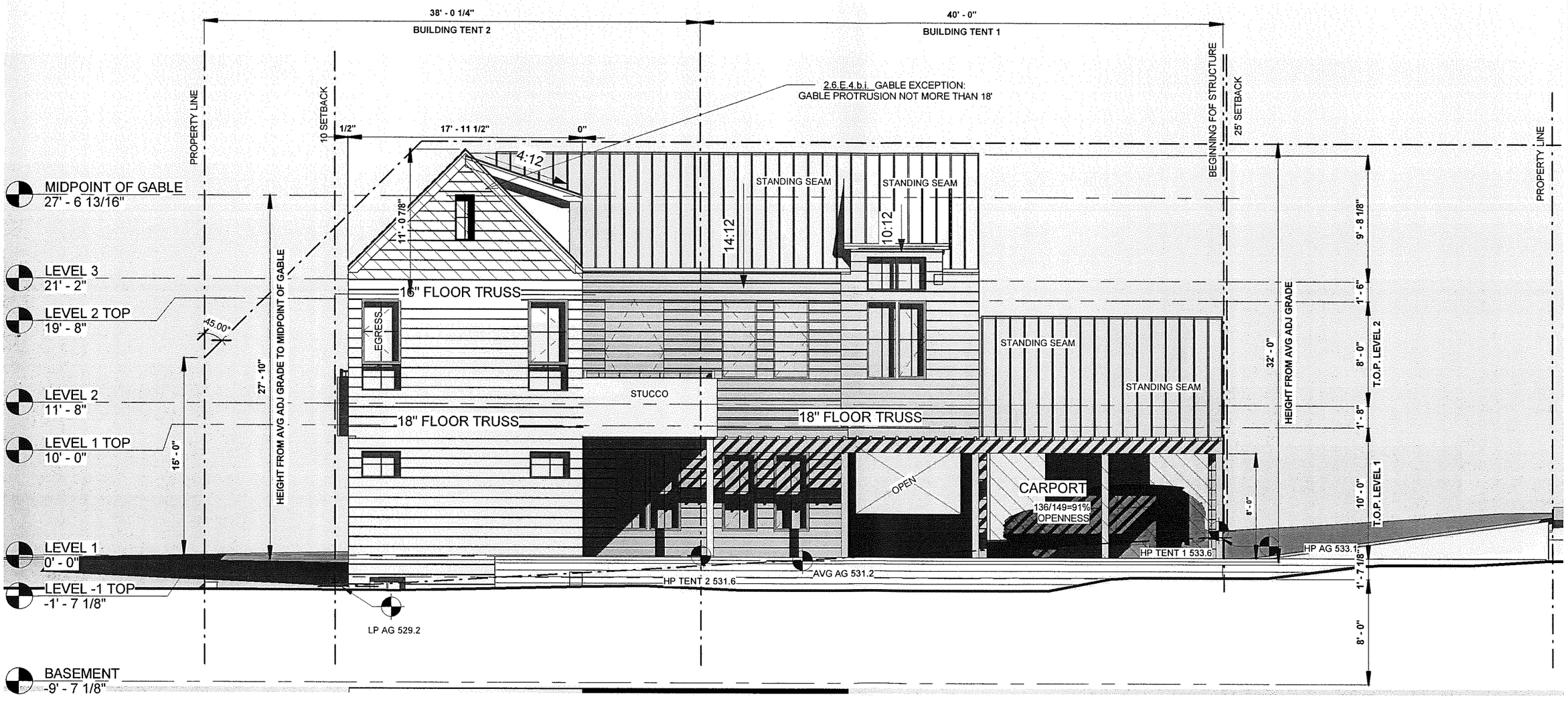

1 P- SOUTH ELEVATION
1/8" = 1'-0"

FOR PERMITTING ONLY NOT FOR CONSTRUCTION OR BIDDING PURPOSES

COPYRIGHT 2015 * STEPHEN ZAGORSKI, ARCHITECT * THESE DRAWINGS ARE INSTRUMENTS OF PROFESSIONAL SERVICE AND ARE LICENSED FOR A SINGLE CONSTRUCTION PROJECT.

REGISTERED ARCHITECT
STEPHEN W. ZAGORSKI
06-26-13
12205
STATE OF TEXAS
10/10/2017

STEVE ZAGORSKI
ARCHITECT

PRESSLER
802 PRESSLER, AUSTIN, TX 78703

PROJECT NO:	2016
DRAWN BY:	
CHECKED BY:	
ISSUE DATE:	10/10/2

DRAWING TITLE
SOUTH ELEVATION

DRAWING NO
P 4.1

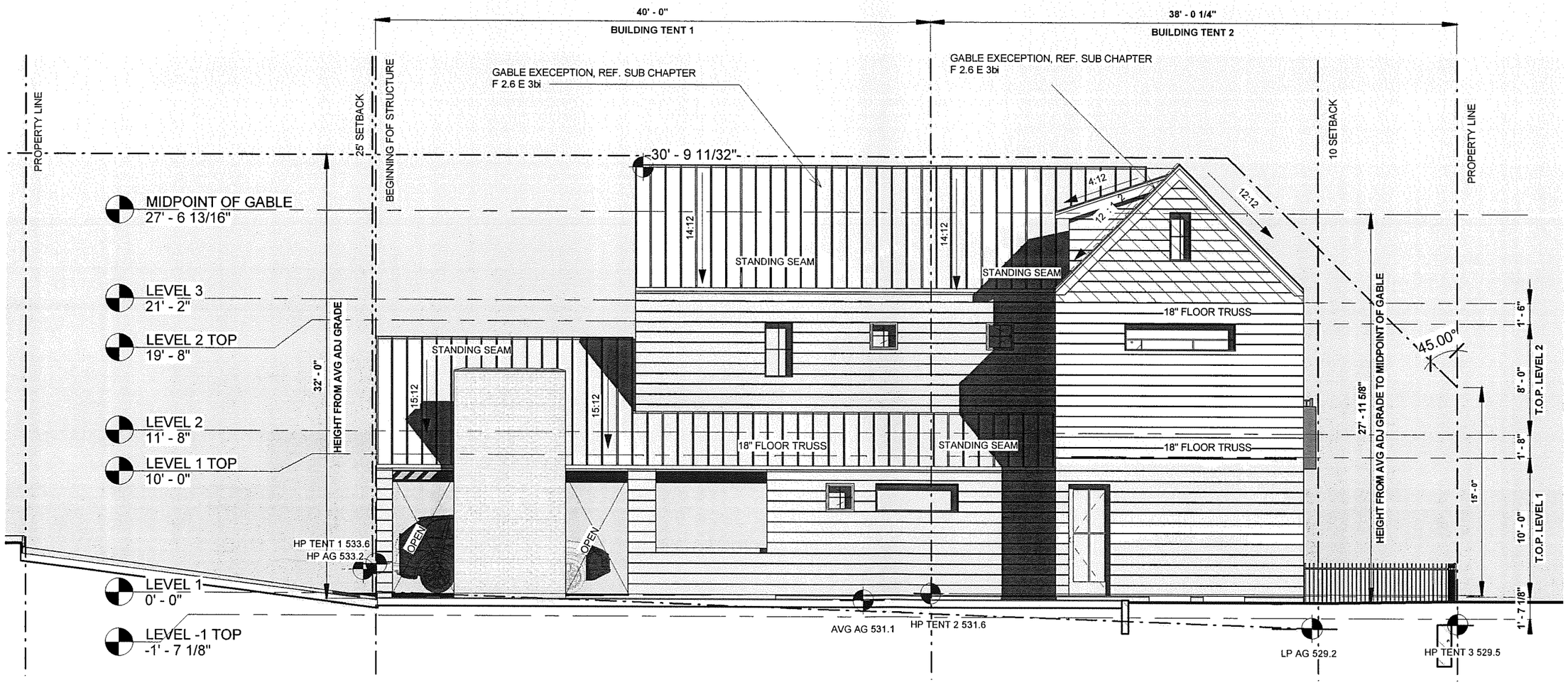

1 P- NORTH ELEVATION
1/8" = 1'-0"

FOR PERMITTING ONLY NOT FOR CONSTRUCTION OR BIDDING PURPOSES

COPYRIGHT 2015 * STEPHEN ZAGORSKI, ARCHITECT * THESE DRAWINGS ARE INSTRUMENTS OF PROFESSIONAL SERVICE AND ARE LICENSED FOR A SINGLE CONSTRUCTION PROJECT.

REGISTERED ARCHITECT
STEPHEN W. ZAGORSKI
06-26-13
12205
STATE OF TEXAS
10/10/2017

STEVE ZAGORSKI
ARCHITECT

PRESSLER
802 PRESSLER, AUSTIN, TX 78703

PROJECT NO:	2016
DRAWN BY:	
CHECKED BY:	
ISSUE DATE:	10/10/2

DRAWING TITLE
NORTH ELEVATION

DRAWING NO
P 4.1

802 PRESSLER

IN GROUND:	TOTAL:
1358 SF	1386 SF

97% IN GRADE

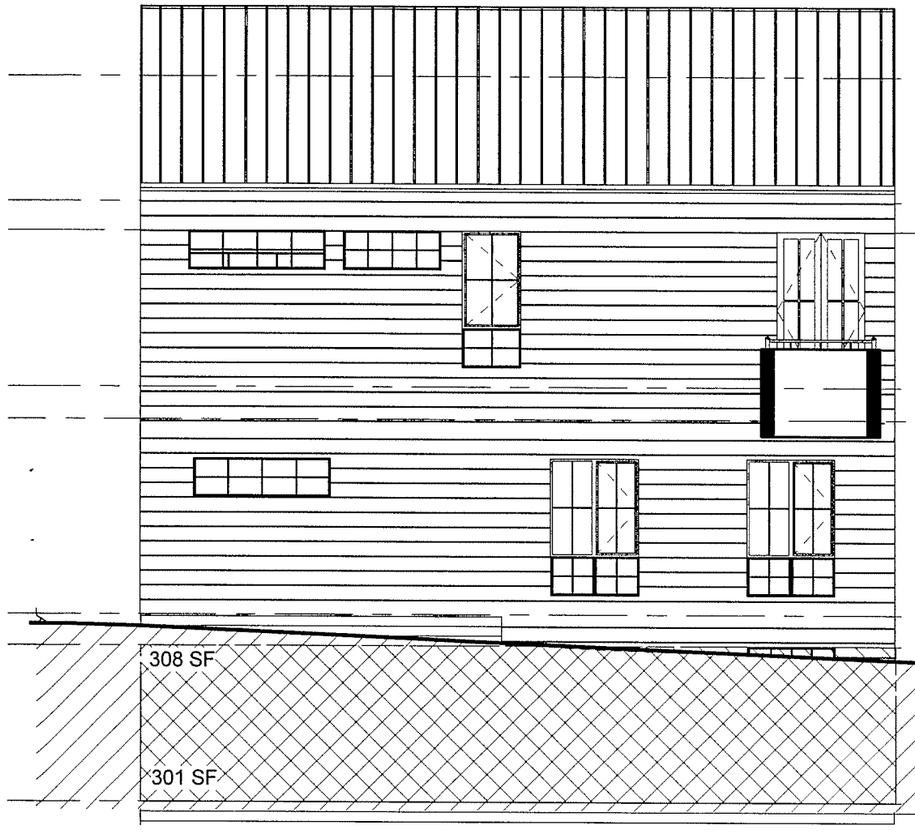

1 BASEMENT 1
1/8" = 1'-0"

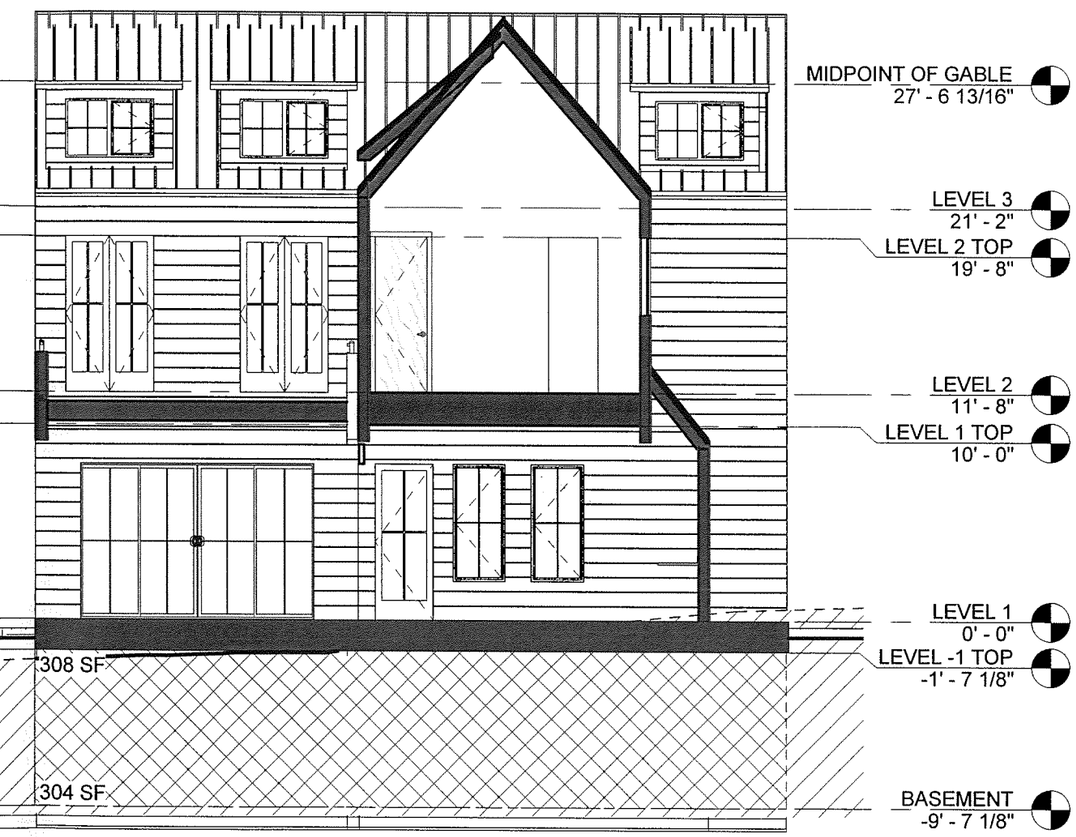

2 BASEMENT 4
1/8" = 1'-0"

10/10/2017

STEVE ZAGORSKI
ARCHITECT

PRESSLER
802 PRESSLER, AUSTIN, TX 78703

PROJECT NO:	2016
DRAWN BY:	
CHECKED BY:	
ISSUE DATE:	10/10/2

DRAWING TITLE

BASEMENT CALCULATIONS

DRAWING NO

P 5.(

COPYRIGHT 2015 * STEPHEN ZAGORSKI, ARCHITECT * THESE DRAWINGS ARE INSTRUMENTS OF PROFESSIONAL SERVICE AND ARE LICENSED FOR A SINGLE CONSTRUCTION PROJECT.

802 PRESSLER

IN GROUND: 1358 SF

TOTAL: 1386 SF

97% IN GRADE

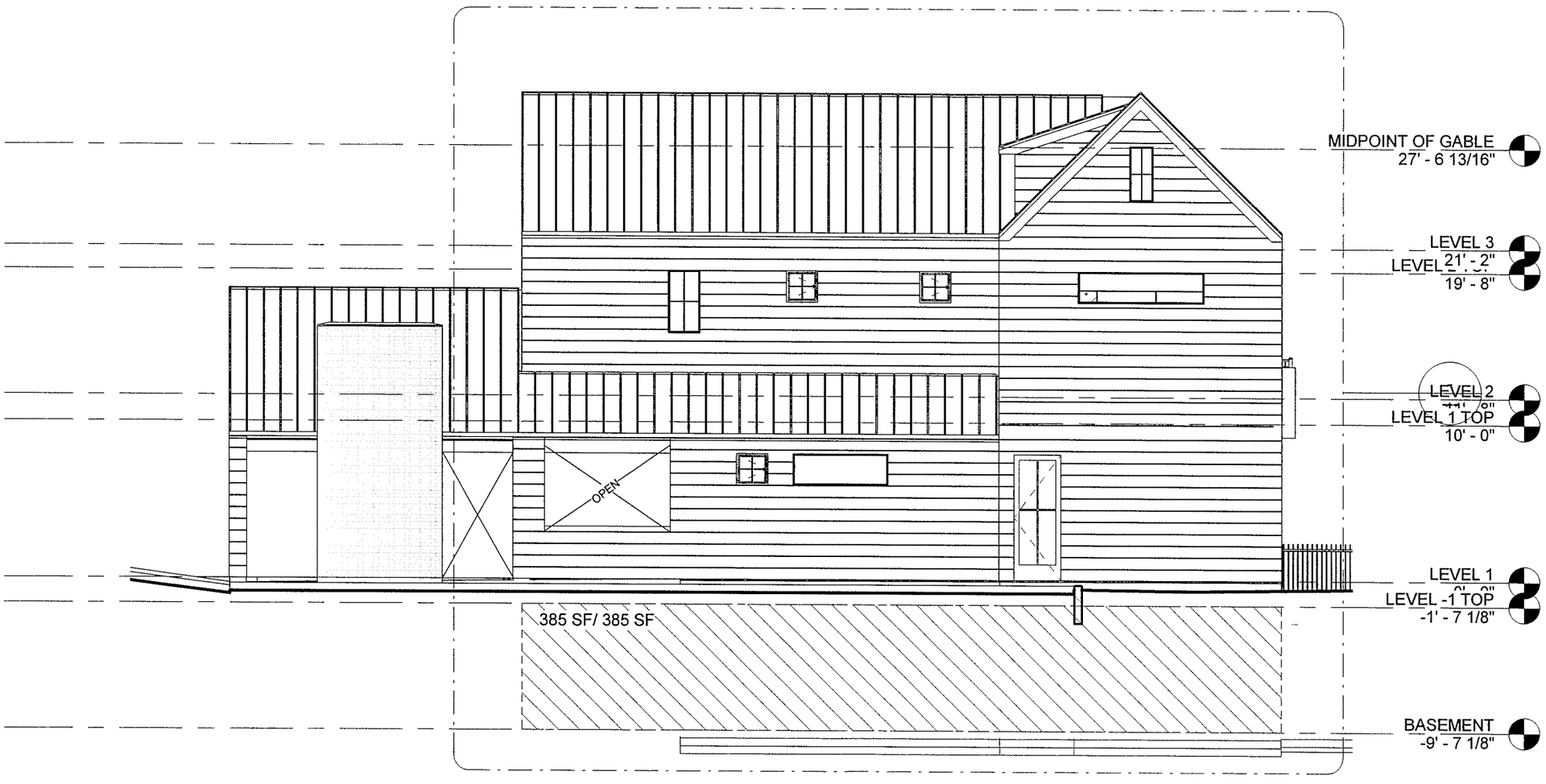

1 BASEMENT 2
1/8" = 1'-0"

REGISTERED ARCHITECT
STEPHEN W. ZAGORSKI
06-25-13
12205
STATE OF TEXAS

10/10/2017

STEVE ZAGORSKI
ARCHITECT

PRESSLER

802 PRESSLER, AUSTIN, TX 78703

PROJECT NO:	2016
DRAWN BY:	
CHECKED BY:	
ISSUE DATE:	10/10/2

DRAWING TITLE

BASEMENT CALCULATIONS

DRAWING NO

P 5.1

COPYRIGHT 2015 * STEPHEN ZAGORSKI, ARCHITECT * THESE DRAWINGS ARE INSTRUMENTS OF PROFESSIONAL SERVICE AND ARE LICENSED FOR A SINGLE CONSTRUCTION PROJECT.

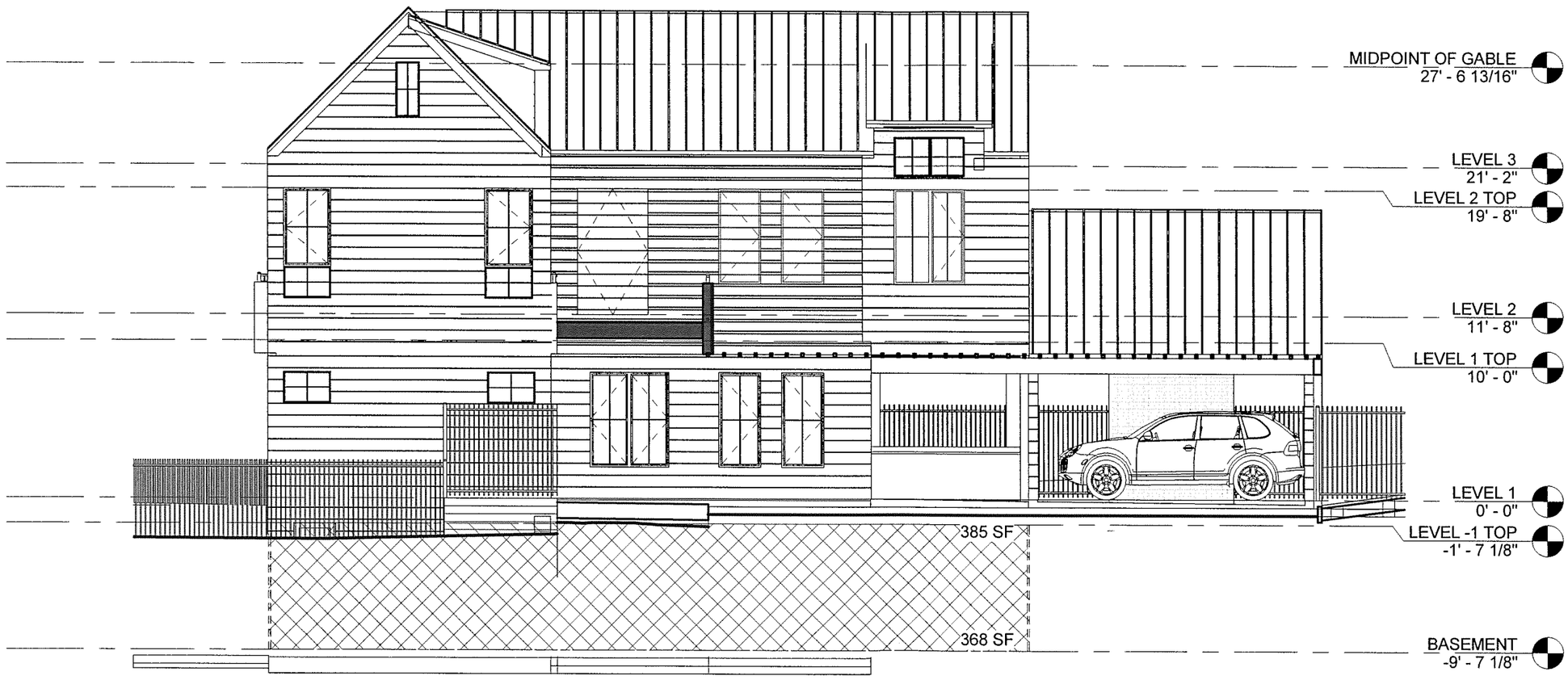

1 BASEMENT 3
1/8" = 1'-0"

REGISTERED ARCHITECT
STEPHEN W. ZAGORSKI
06-25-13
12205
STATE OF TEXAS
10/10/2017

STEVE ZAGORSKI
ARCHITECT

PRESSLER
802 PRESSLER, AUSTIN, TX 78703

PROJECT NO:	2016_
DRAWN BY:	
CHECKED BY:	
ISSUE DATE:	10/10/2

DRAWING TITLE

BASEMENT CALCULATIONS

DRAWING NO

P 5.

COPYRIGHT 2015 * STEPHEN ZAGORSKI, ARCHITECT * THESE DRAWINGS ARE INSTRUMENTS OF PROFESSIONAL SERVICE AND ARE LICENSED FOR A SINGLE CONSTRUCTION PROJECT.

REGISTERED ARCHITECT
STEPHEN W. ZAGORSKI
06-25-13
12205
STATE OF TEXAS
10/10/2017

FOR PERMITTING ONLY NOT FOR CONSTRUCTION OR BIDDING PURPOSES

COPYRIGHT 2015 * STEPHEN ZAGORSKI, ARCHITECT * THESE DRAWINGS ARE INSTRUMENTS OF PROFESSIONAL SERVICE AND ARE LICENSED FOR A SINGLE CONSTRUCTION PROJECT.

STEVE ZAGORSKI
ARCHITECT

PRESSLER

802 PRESSLER, AUSTIN, TX 78703

PROJECT NO:	2016
DRAWN BY:	
CHECKED BY:	
ISSUE DATE:	10/10/2

DRAWING TITLE

PERSPECTIVES

DRAWING NO

P 6.

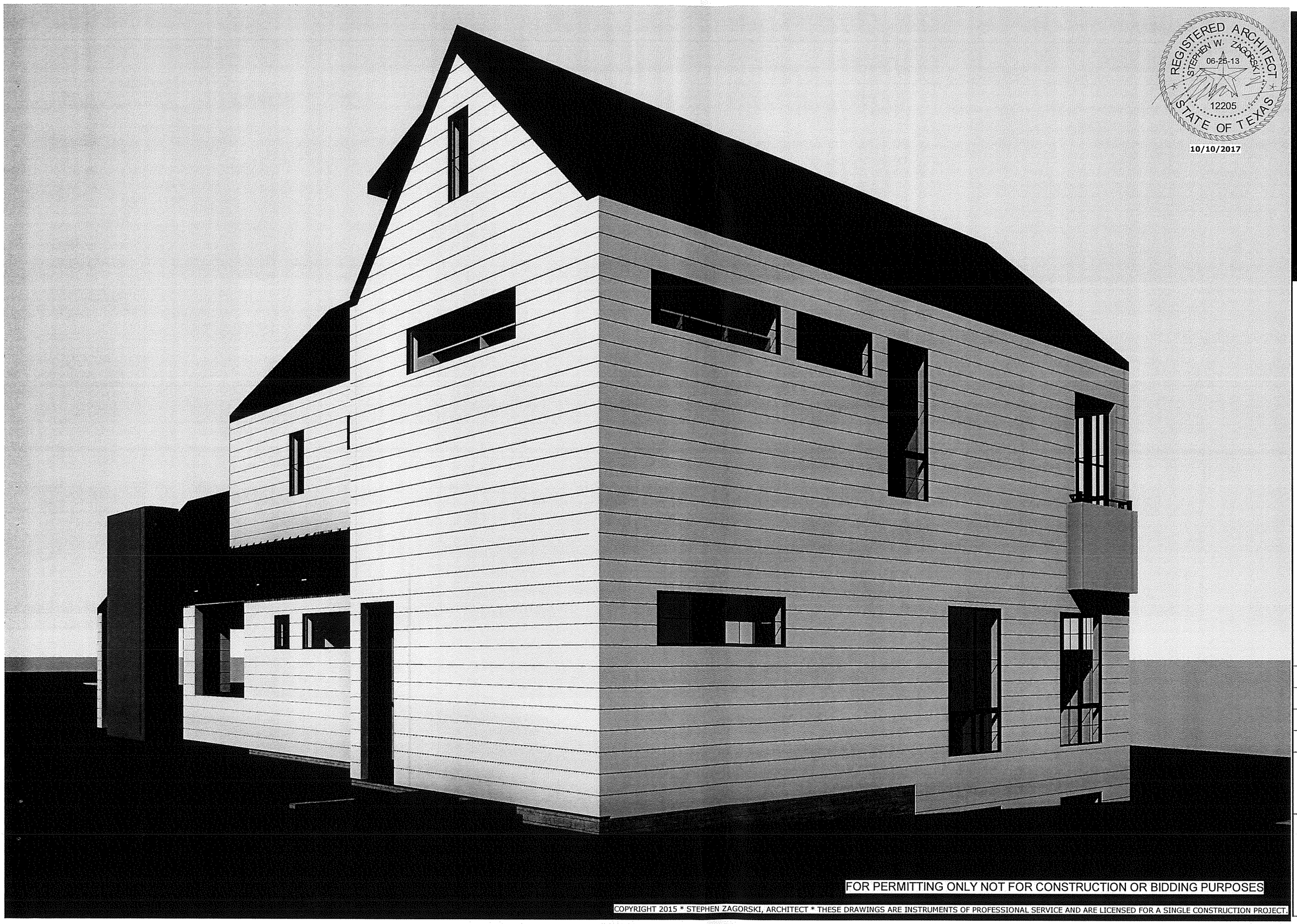

REGISTERED ARCHITECT
STEPHEN W. ZAGORSKI
06-25-13
12205
STATE OF TEXAS

10/10/2017

FOR PERMITTING ONLY NOT FOR CONSTRUCTION OR BIDDING PURPOSES

COPYRIGHT 2015 * STEPHEN ZAGORSKI, ARCHITECT * THESE DRAWINGS ARE INSTRUMENTS OF PROFESSIONAL SERVICE AND ARE LICENSED FOR A SINGLE CONSTRUCTION PROJECT.

STEVE ZAGORSKI
ARCHITECT

PRESSLER

802 PRESSLER, AUSTIN, TX 78703

PROJECT NO:	2016
DRAWN BY:	
CHECKED BY:	
ISSUE DATE:	10/10/2

DRAWING TITLE

PERSPECTIVES

DRAWING NO

P 6.1

REGISTERED ARCHITECT
STEPHEN W. ZAGORSKI
06-26-13
12205
STATE OF TEXAS

10/10/2017

FOR PERMITTING ONLY NOT FOR CONSTRUCTION OR BIDDING PURPOSES

COPYRIGHT 2015 * STEPHEN ZAGORSKI, ARCHITECT * THESE DRAWINGS ARE INSTRUMENTS OF PROFESSIONAL SERVICE AND ARE LICENSED FOR A SINGLE CONSTRUCTION PROJECT.

STEVE ZAGORSKI
ARCHITECT

PRESSLER

802 PRESSLER, AUSTIN, TX 78703

PROJECT NO:	2016
DRAWN BY:	
CHECKED BY:	
ISSUE DATE:	10/10/2

DRAWING TITLE

PERSPECTIVES

DRAWING NO

P 6.1

STRUCTURAL NOTES

FOUNDATION NOTES

CODES AND SPECIFICATIONS

1. 2015 EDITION OF THE INTERNATIONAL BUILDING CODE.
2. ASCE 7-11, MINIMUM DESIGN LOADS FOR BUILDINGS AND OTHER STRUCTURES.
3. POST-TENSION INSTITUTE (PTI), 3RD. EDITION: DESIGN OF POST-TENSION SLABS-ON-GROUND, 2008.
4. BUILDING RESEARCH ADVISORY BOARD (BRAB) REPORT #33: CRITERIAFOR SELECTION AND DESIGN OF RESIDENTIAL SLABON GROUND.
5. ACI 301-05 SPECIFICATIONS FOR STRUCTURAL CONCRETE FOR BUILDINGS AND ACI-318-08 BUILDING CODE REQUIREMENTS FOR STRUCTURAL CONCRETE.

MATERIALS

CONCRETE

1. ALL CONCRETE SHALL HAVE A MINIMUM COMPRESSIVE STRENGTH AT 28 DAYS OF 3000PSI
   - 1.1. MINIMUM CEMENT CONTENT: 4½" SACKS/C.Y.
   - 1.2. MAXIMUM WATER/CEMENT RATIO: 0.45
   - 1.3. SLUMP RANGE: 5" MIN - 8" MAX.
   - 1.4. MAX. COARSE AGGREGATE SIZE: ¾"
2. ALL REINFORCING SHALL BE ASTM A-615, GRADE 60
3. STANDARD PROTECTIVE COVER OF REINFORCING BARS UNLESS OTHERWISE NOTED SHALL BE:
   - 3.1. WHERE CAST AGAINS DIRT OR FILL .. . . . . 3"
   - 3.2. EXPOSED TO EARTH OR WATER . . . . 2"
   - 3.3. SLABS AND WALLS (EXTERIOR) . . . . 2"
4. FILL FOR PADS UNDER FOUNDATION TO BE A GRANULAR MATERIAL WITH A LIQUID LIMIT OF 37 AND A PLASTICITY INDEX OF 15.
5. VAPOR BARRIER TO BE MINIMUM OF 6 MIL.
6. WATERPROOFING FOR WALLS BELOW GRADE TO BE PER IRC 406.2.

FOUNDATION CONSTRUCTION

1. REMOVE ALL VEGETATION AND TOP 6 INCHES OF TOP SOIL PRIOR TO CONSTRUCTING FOUNDATION. REMOVE ALL NON-ENGINEERED FILL AND REPLACE WITH COMPACTED SELECT FILL.
2. FOUNDATION PADS BENEATH FOUNDATIONS, IF REQUIRED, TO BE COMPACTED TO 95% STANDARD PROCTOR PER ASTM D698.
3. FOUNDATION PADS SHALL EXTEND OUTSIDE THE FOUNDATION BY 5 FEET.
4. DRAINAGE AROUND THE PERIMETER OF THE FOUNDATION SHALL BE DONE PER IRC SUCH THAT NO WATER SHALL COLLECT UNDER OR ADJACENT TO THE SLAB.
5. HEAVY VEGETATION SUCH AS TREES WITHIN 20 FT. OF FOUNDATION MAY CAUSE EXCESSIVE WATER REMOVAL AND DAMAGE FOUNDATIONS. NO TREES SHOULD BE PLANTED WITHIN 20 FT OR THE MATURE HEIGHT OF THE TREE PLANTED.
6. BEAMS TO BE A MINIMUM OF 12 INCHES INTO UNDISTURBED SOIL OR COMPACTED SELECT FILL. WHEN CONDITIONS PROHIBIT THIS DEPTH, CONTACT THE ENGINEER OF RECORD.
7. PROVIDE A VAPOR BARRIER UNDER THE SLAB, DRAPE VAPOR BARRIER DOWN BEAM SIDES A MINIMUM OF 6 INCHES, ADJACENT SHEETS SHALL BE OVERLAPPED 6 INCHES AND PINNED OR SEALED.
8. FOR FIELD CONDITIONS NOT EXPLICITLY COVERED BY PLANS AND DETAILS, CONTACT ENGINEER OF RECORD.
9. DO NOT SET FORMS BY THE FOUNDATION PLANS, USE ARCHITECTURAL PLANS.
10. CONTRACTOR TO VERIFY ALL DROPS, DIMENSIONS, AND BRICK LEDGES.
11. EXTERIOR BEAM DEPTHS CHANGE WITH TOPOGRAPHY, REF. DETAILS.
12. REPORT ALL CONFLICTS TO THE ENGINEER OF RECORD.
13. FOR PI OF LESS THAN 15 OR SOLID ROCK, NOTIFY ENGINEER OF RECORD
14. PRE-POUR INSPECTIONS BY ENGINEER OF RECORD IS REQUIRED.

ROOF FRAMING NOTES

1. ALL FRAMING MEMBERS AND CONSTRUTION TO BE PER 2015 EDITION OF INTERNATIONAL RESIDENTIAL CODE.
2. ROOF RAFTERS ATTACHMENT TO LOAD BEARING WALLS,CEILING JOISTS AND SUPPORTING BEAMS TO BE CONTROLLED BY IRC FASTNER SCHEDULE(S) IF NOT SPECIFICALLY SHOWN ON ENGINEERING PLANS OR DETAILS.
3. ROOF DEFLECTION CRITERIA: L/240
4. FRAMING MEMBERS TO BE #2 SOUTHERN PINE. REFER TO NOTE 4 OF CEILING FRAMING NOTES.
5. ROOF RAFTERS SHALL BE 2X6 @24 IN. O.C. MIN., U.N.O.
6. PURLINS SIZE SHALL MATCH RAFTER SIZE. MAXIMUM SUPPORT SPACING: 4'-0" O.C., U.N.O.
7. ∅ INDICATES RIDGE, RAFTER OR PURLIN BRACING WITH BEARING POINT DIRECTLY BELOW.
   INDICATES RIDGE, RAFTER OR PURLIN BRACING WITH BEARING POINT LOCATION.
8. BRACES UP TO 6FT LONG SHALL BE 2X4. LONGER BRACES/POSTS SHALL BE MADE OF 2-2X6 FASTENED TOGETHER IN A "L" OR "T" PATTERN.
9. VERIFY ALL DIMENSIONS AGAINST ARCHITECTURAL DRAWINGS.
10. PLYWOOD ROOF SHEATHING OR OSB SHALL BE ½" THICK MIN. U.N.O.

CEILING FRAMING NOTES

1. ALL FRAMING MEMBERS AND CONSTRUCTION TO BE PER 2015 EDITION OF INTERNATIONAL RESIDENTIAL CODE.
2. DESIGN LOADS:
   - 2.1 LIVE LOADS:
     - A. UNINHABITABLE ATTICS W/O STORAGE. . . . . 10 PSF
     - B. UNINHABITABLE ATTICS W/ LIMITED STORAGE. . . . . 20 PSF
     - C. HABITABLE ATTICS AND SLEEPING AREAS. . . . . .30 PSF
     - D. ALL OTHER AREAS EXCEPT BALCONIES AND DECKS. . . . 40 PSF
     - E. ROOF LIVE LOAD: 20 PSF, REDUCIBLE PER LATEST IBC
3. ALL CEILING JOISTS TO BE 2X6 @ 24" O.C., TYPICAL U.N.O. CEILING DEFLECTION CRITERIA: L/240
4. DESIGN VALUES FOR VISUALLY GRADED LUMBER: ALL FRAMING MEMBERS TO BE #2 SOUTHERN YELLOW PINE AND SHOULD COMPLY WITH THE DESIGN VALUES SET BY THE AMERICAN WOOD COUNCIL (AWC) EFFECTIVE ON JUNE, 2013.

LUMBER	FB (PSI)	FV (PSI)	E (KSI)
2X6	1,000	175	1,400
2X8	925	175	1,400
2X10	800	175	1,400
2X12	750	175	1,400

5. LAMINATED VENEER LUMBER (LVL): E=2,000,000 (2.0E); FB=2600 PSI; FV=285 PSI
6. CEILING JOISTS SPACED AT 24" O.C., U.N.O.

WIND BRACING NOTES

1. WIND LOADS PER 2015 INTERNATIONAL RESIDENTIAL CODE:
   BASIC WIND SPEED: 115 MPH (3 SEC. GUST)
   EXPOSURE: B
   BUILDING CATEGORY II
   I = 1.0
2. SHEATHING TO BE 7/16" STRUCTURAL PLYWOOD OR OSB. ATTACH WITH/ FASTENERS 6" O.C. @ EDGES AND 12" O.C. INTERMEDIATE STUDS. PER 2015 IRC. TABLE R602.3 (1). 2X STUDS AT 16" O.C.. FASTEN STUDS PER LATEST IRC.
3. FASTENERS BETWEEN PANEL ENDS SHALL BE PER LATEST IRC.
4. USE DETAIL 1 & 2 (TYP. DETAIL SHEET) FOR 1X4 LET-IN BRACED WALL
5. MAXIMUM BWL SPACING: 60FT
6. FLOOR DECK SHALL BE ¾" (MIN.) PLYWOOD OR OSB FASTENED WITH 8D COMMON NAILS @ 6" O.C. (EDGES) AND 12" O.C. (INTERMEDIATE)
7. ROOF DECK SHALL BE 7/16" (MIN.) PLYWOOD OR OSB FASTENED WITH 8D COMMON NAILS @ 6" O.C. (EDGES) AND 12" O.C. (INTERMEDIATE)

LEGEND

SYMBOL	DESCRIPTION	BRACING METHOD
	7/16" PLYWOOD / OSB SHEATHING	WSP: WOOD STRUCTURAL PANEL (2)
	7/16" PORTAL FRAME (PLYWOOD/OSB)	PFH (3) / PFG (4), REFER PLAN
	STRUCTURAL GRADE T- PLY (THERMO PLY)	CS-SFB: STRUCTURAL FIBER BOARD
	GYPSUM BOARD ONE FACE	½" GYPSUM BOARD REF. TABLE R602.10.2 NAILS/SCREWS @ 7" O.C.
	GYPSUM BOARD TWO FACES	½" GYPSUM BOARD REF. TABLE R602.10.2 NAILS/SCREWS @ 7" O.C.
	1- 1x4 LET IN OR METAL X OR V BRACE (SIMPSON WB/WBC WALL BRACING)	LIB: LET IN BRACING
*	HOLD DOWN LOCATION	PFH (3) / PFG (4), (REF. DETAIL 3 ON SHEET 2 OF 2)

BRACING METHOD		THICKNESS (TABLE R602.10.4)	FASTENERS (TABLE R602.10.4)
CS-WSP	CONT. SHEATHED WALL STRUCTURAL PANEL	7/16"	1 ½" LONG x0.12" DIA. (FOR ½" THICK SHEATHING) 1 ¾" LONG x0.12" DIA. (FOR 23/32" THICK SHEATHING) GALVANIZED ROOFING NAILS OR 8d COMMON (2 ½" LONG X0.131" DIA.) NAILS.
LIB	LET-IN BRACING	1x4 (45° - 60°)	2 - 8d COMMON NAILS
GB	GYPSUM BOARD	½"	[REF. TABLE R602.3(1)]
PF	PORTAL FRAME	½"	[REF. TABLE R602.3(1)]

(1) IRC 2015: R602.10.2 / R602.10.4.1
(2) EITHER SIDE OF WALL ON INTERIOR WALLS
(3) PORTAL FRAME (INTERMITTENT) WITH HOLD DOWNS.
(4) PORTAL FRAME AT GARAGE.

9201 HWY 29
GEORGETOWN, TX 78628
(512) 215-4364
F-15009
SEC SOLUTIONS

802 PRESSLER
AUSTIN, TEXAS 78703

STATE OF TEXAS
MARCOS V. DEQUEIROGA
101049
LICENSED PROFESSIONAL ENGINEER

NO.	REVISION	DATE
1.	REVIEW SET	09-22-17

PROJECT: 16490
DATE: 09-22-17
DRAWN BY: MS

SCALE: AS NOTED

S0

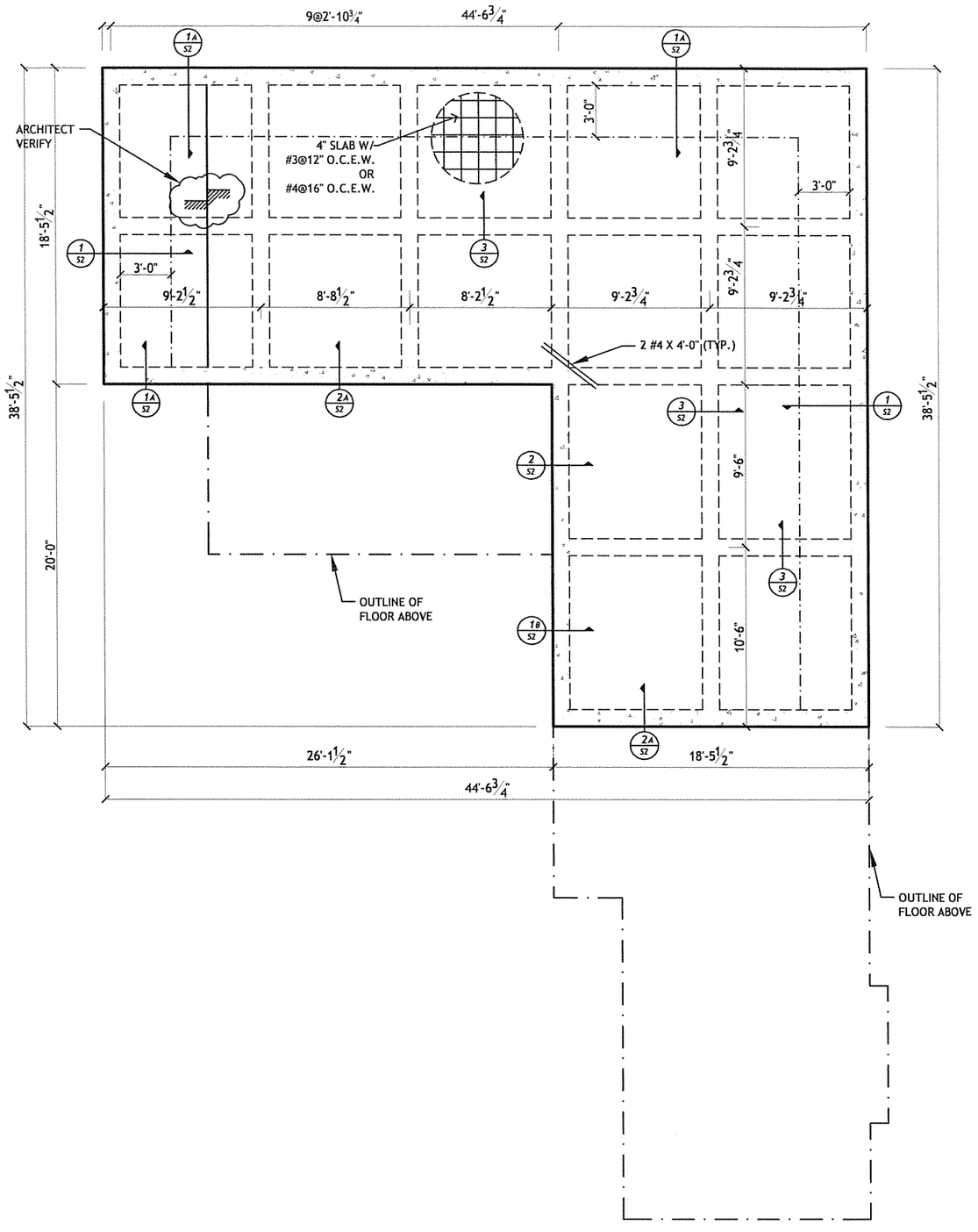

PRE-POUR AND STRESSING INSPECTIONS BY SEC REPRESENTATIVE IS REQUIRED.TO SCHEDULE CONTACT OFFICE@SECTEXAS.COM OR CALL 512-215-4364

GEOTECHNICAL SUMMARY

1. GEOTECHNICAL REPORT BY: SEC SOULITIONS LLC
2. PROJECT NUMBER: 16490
3. DESIGN PI: 28
4. ALLOWABLE BEARING CAPACITY: 1500 PSF
5. PTI DESIGN PARAMETERS (3RD ED):

e (FT)		y_m(FT)	
CENTER	EDGE	CENTER	EDGE
9.0	5.0	1.2	1.5

PLAN NOTES

1. CONCRETE CONTRACTOR MUST VERIFY ALL DIMENSIONS AND COORDINATE STRUCTURAL PLANS AND DETAILS WITH ARCHITECTURAL DRAWINGS BEFORE CONCRETE WORK.
2. THE ENGINEER OF RECORD SHALL BE NOTIFIED OF ANY DISCREPANCIES PRIOR TO CONSTRUCTION.
3. REFER TO ARCHITECTURAL DRAWINGS FOR SLAB DROPS & ACCESSIBILITY REQUIREMENTS
4. PERIMETER BEAM TO PENETRATE A MINIMUM OF 12" INTO NATURAL GRADE

DESIGN SUMMARY

1. CONCRETE COMPRESSIVE STRENGTH (28 DAYS): 3000 PSI
2. SLAB THICKNESS: 4 IN
3. INTERIOR BEAM DIMENSIONS:
   WIDTH:12"
   DEPTH: 28"
4. EXTERIOR BEAM DIMENSIONS:
   WIDTH: 12"
   DEPTH: 30" REF PLAN NOTE 4

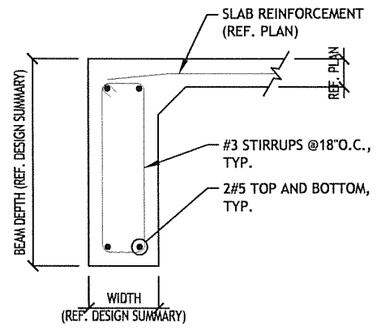

BEAM REINFORCEMENT

LOWER FOUNDATION PLAN

SCALE: 1/8"=1'-0"
SLAB AREA: 1192 SF

9201 HWY 29
GEORGETOWN, TX 78628
(512) 215-4364
F-15009
SEC SOLUTIONS

802 PRESSLER
AUSTIN,TEXAS 78703

STATE OF TEXAS
MARCOS V. DEQUEIROGA
101049
LICENSED PROFESSIONAL ENGINEER

NO.	REVISION	DATE
1.	REVIEW SET	09-22-17

PROJECT: 16490
DATE: 09-22-17
DRAWN BY: MS

SCALE: AS NOTED

S1.1

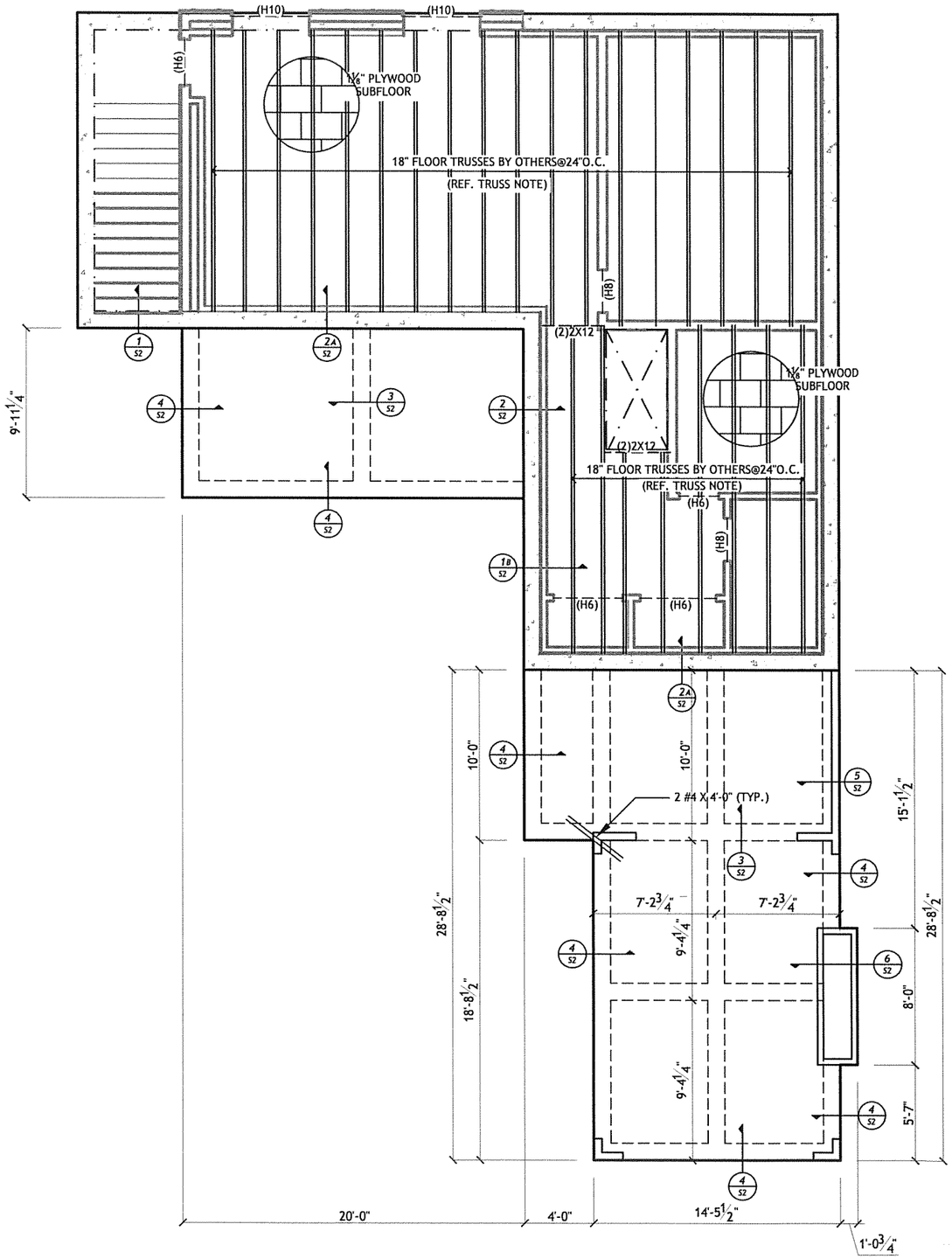

PLAN NOTES

1. CONCRETE CONTRACTOR MUST VERIFY ALL DIMENSIONS AND COORDINATE STRUCTURAL PLANS AND DETAILS WITH ARCHITECTURAL DRAWINGS BEFORE CONCRETE WORK.
2. THE ENGINEER OF RECORD SHALL BE NOTIFIED OF ANY DISCREPANCIES PRIOR TO CONSTRUCTION.
3. REFER TO ARCHITECTURAL DRAWINGS FOR SLAB DROPS & ACCESSIBILITY REQUIREMENTS
4. PERIMETER BEAM TO PENETRATE A MINIMUM OF 12" INTO NATURAL GRADE

GEOTECHNICAL SUMMARY

1. GEOTECHNICAL REPORT BY: SEC SOULITIONS LLC
2. PROJECT NUMBER: 16490
3. DESIGN PI: 28
4. ALLOWABLE BEARING CAPACITY: 1500 PSF
5. PTI DESIGN PARAMETERS (3RD ED):

e (FT)		y_m(FT)	
CENTER	EDGE	CENTER	EDGE
9.0	5.0	1.2	1.5

DESIGN SUMMARY

1. CONCRETE COMPRESSIVE STRENGTH (28 DAYS): 3000 PSI
2. SLAB THICKNESS: 4 IN
3. INTERIOR BEAM DIMENSIONS:
   WIDTH:12"
   DEPTH: 28"
4. EXTERIOR BEAM DIMENSIONS:
   WIDTH: 12"
   DEPTH: 30" REF PLAN NOTE 4

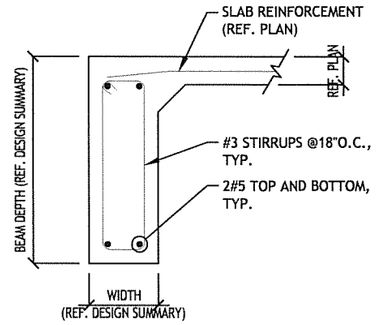

BEAM REINFORCEMENT

PRE-POUR INSPECTION BY SEC REPRESENTATIVE IS REQUIRED. TO SCHEDULE CONTACT OFFICE@SECTEXAS.COM OR CALL 512-215-4364

UPPER FOUNDATION PLAN

SCALE: 1/8"=1'-0"
SLAB AREA: 711 SF

9201 HWY 29
GEORGETOWN, TX 78628
(512) 215-4364
F-15009
SEC SOLUTIONS

802 PRESSLER
AUSTIN, TEXAS 78703

STATE OF TEXAS
MARCOS V. DEQUEIROGA
101049
LICENSED PROFESSIONAL ENGINEER

NO.	REVISION	DATE
1.	REVIEW SET	09-22-17

PROJECT: 16490
DATE: 09-22-17
DRAWN BY: MS

SCALE: AS NOTED

S1.2

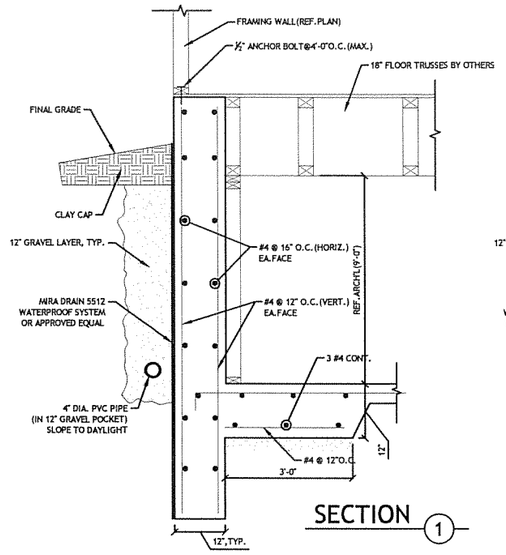

SECTION 1

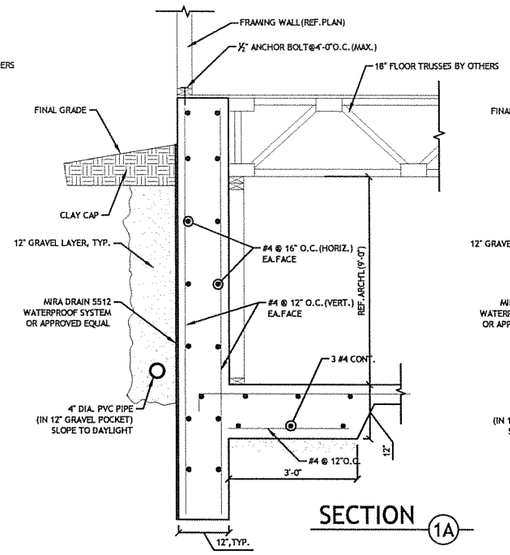

SECTION 1A

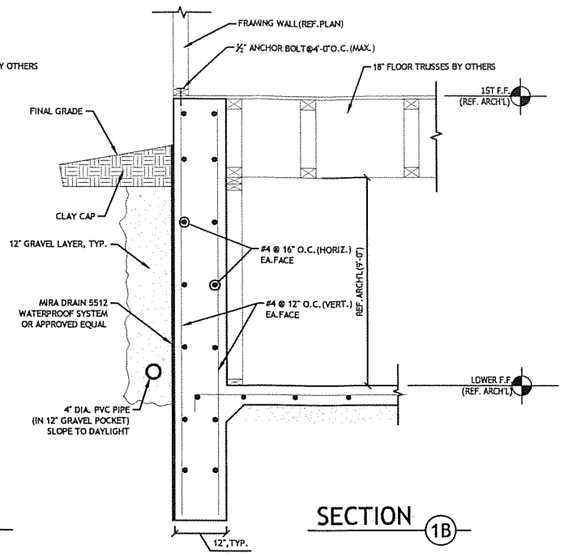

SECTION 1B

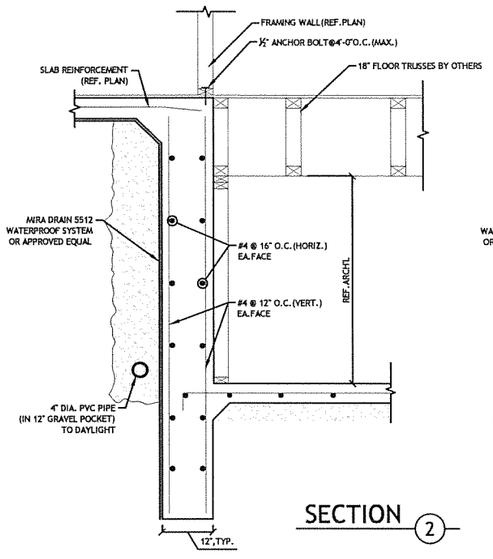

SECTION 2

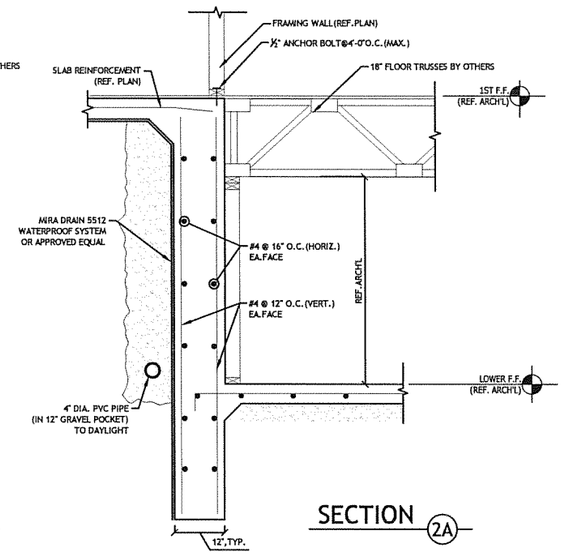

SECTION 2A

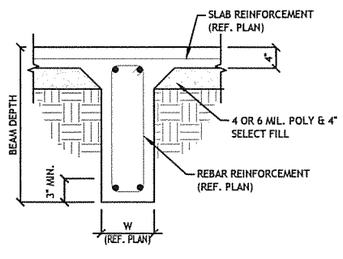

SECTION 3

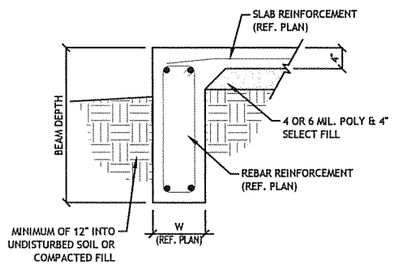

SECTION 4

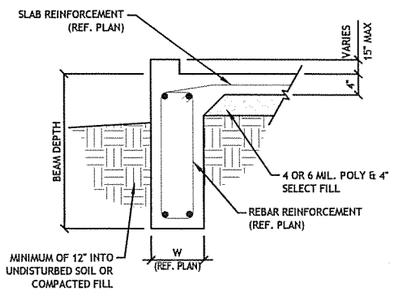

SECTION 5

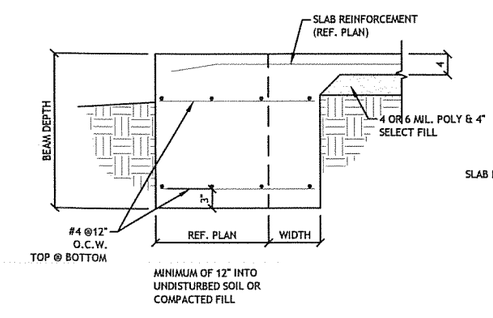

SECTION AT FIRE PLACE 6

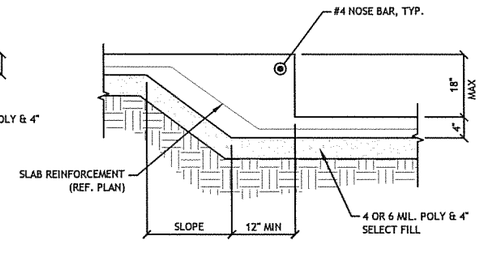

SECTION AT DROPPED SLAB 7

9201 HWY 29
GEORGETOWN, TX 78628
(512) 215-4364
F-15009
SEC SOLUTIONS

802 PRESSLER
AUSTIN, TEXAS 78703

STATE OF TEXAS
MARCOS V. DEQUEIROGA
101049
LICENSED PROFESSIONAL ENGINEER

NO.	REVISION	DATE
1.	REVIEW SET	09-22-17

PROJECT: 16490
DATE: 09-22-17
DRAWN BY: MS

SCALE: AS NOTED

S2

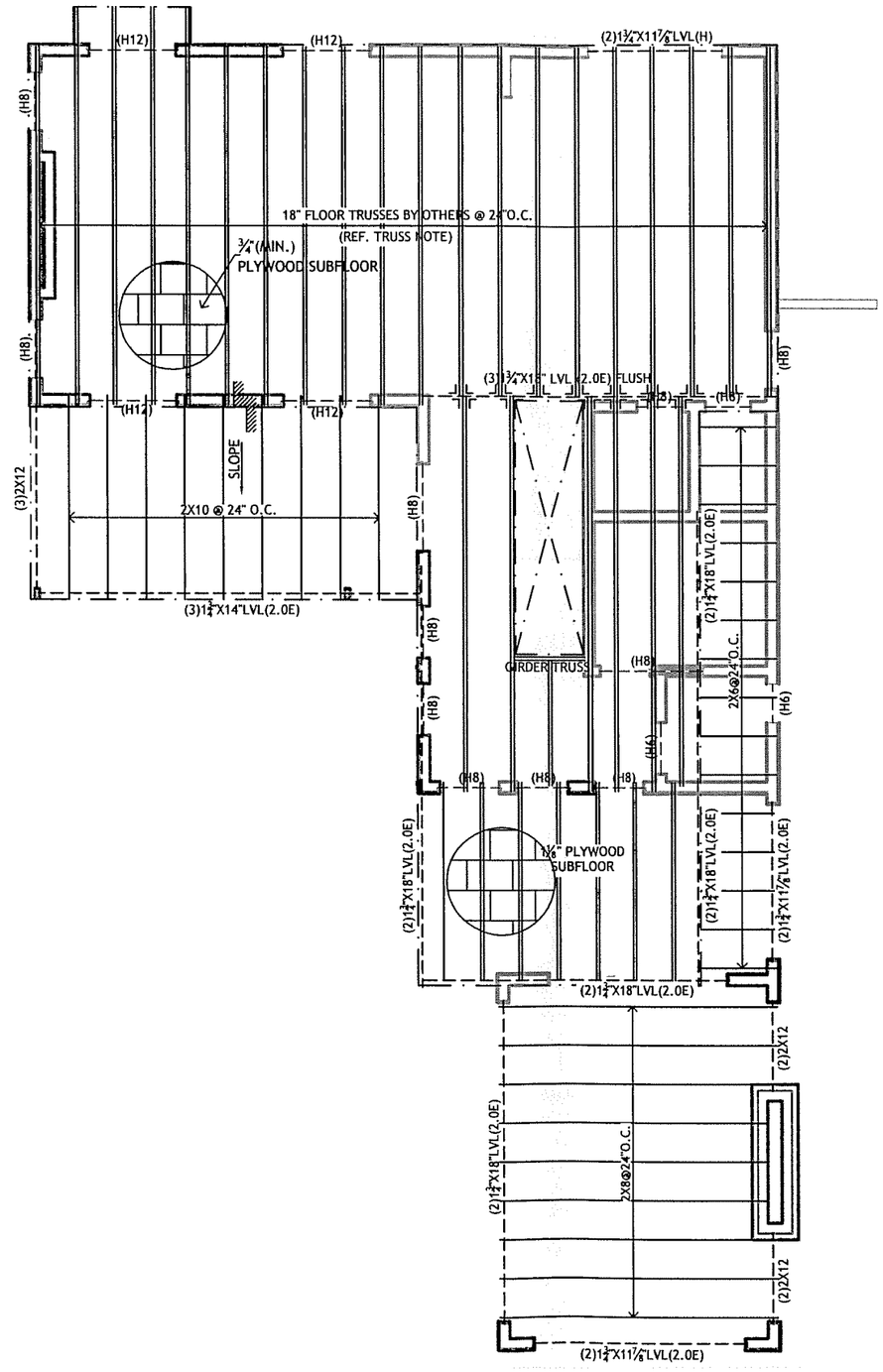

TRUSS NOTES

1. ALL FRAMING MEMBERS AND CONSTRUCTION TO BE PER 2015 EDITION OF INTERNATIONAL RESIDENTIAL CODE.
2. TRUSS SPACING SHOWN ON PLANS IS FOR REFERENCE ONLY. FINAL TRUSS LOCATIONS AND SPACING TO BE PROVIDED BY TRUSS SUPPLIER.

PLAN NOTES

1. ALL CONSTRUCTION PER CURRENT EDITION OF THE INTERNATIONAL RESIDENTIAL CODE (IRC).
2. VERIFY PLAN DIMENSIONS AND FLOOR/CEILING ELEVATIONS(T.O.P.) WITH ARCHITECTURAL PLANS. NOTIFY ENGINEER OF RECORD OF DISCREPANCIES.
3. REFER TO GENERAL NOTES (S0) FOR MATERIAL PROPERTIES AND CONSTRUCTION RECOMMENDATIONS.
4. AT A MINIMUM, DOUBLE JOISTS AT HVAC UNIT LOCATIONS.
5. NOTIFY THE ENGINEER OF RECORD IF FIELD CONDITIONS DON'T ALLOW FRAMING MEMBERS TO BE PLACED AS SHOWN ON PLANS.
6. REFER TO TYPICAL DETAIL SHEET FOR MULTIPLE MEMBER CONNECTION DETAIL(S).

HEADER LEGEND	
LABEL	FRAMING
(H4)	(2) 2X4 (H)
(H6)	(2) 2X6 (H)
(H8)	(2) 2X8 (H)
(H10)	(2) 2X10 (H)
(H12)	(2) 2X12 (H)

LEGEND	
SYMBOL	DESCRIPTION
	OUTLINE OF FLOOR AREA
	2.0E MICRO\LLAM LVL BEAM
	#2 SOUTHERN YELLOW PINE 2x HEADER
	CEILING JOISTS (REF. PLAN)
	FLOOR TRUSSES BY OTHERS

1ST FLOOR - CEILING FRAMING

SCALE: 1/8"=1'-0"

9201 HWY 29
GEORGETOWN, TX 78628
(512) 215-4364
F-15009
SEC SOLUTIONS

802 PRESSLER
AUSTIN, TEXAS 78703

STATE OF TEXAS
MARCOS V. DEQUEIROGA
101049
LICENSED PROFESSIONAL ENGINEER

NO.	REVISION	DATE
1.	REVIEW SET	09-22-17

PROJECT: 16490
DATE: 09-22-17
DRAWN BY: MS

SCALE: AS NOTED

S3.1

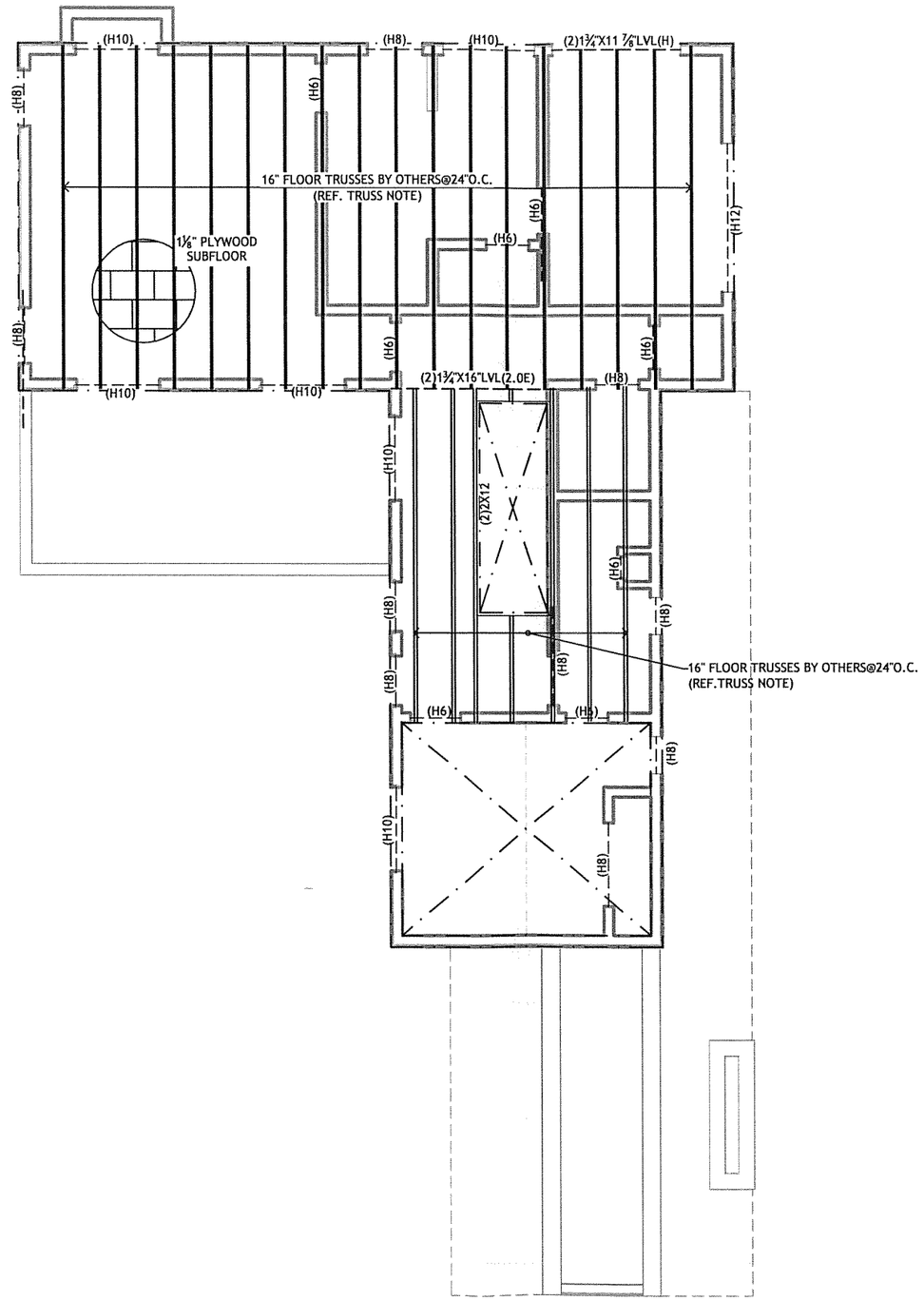

TRUSS NOTES

1. ALL FRAMING MEMBERS AND CONSTRUCTION TO BE PER 2015 EDITION OF INTERNATIONAL RESIDENTIAL CODE.
2. TRUSS SPACING SHOWN ON PLANS IS FOR REFERENCE ONLY. FINAL TRUSS LOCATIONS AND SPACING TO BE PROVIDED BY TRUSS SUPPLIER.

PLAN NOTES

1. ALL CONSTRUCTION PER CURRENT EDITION OF THE INTERNATIONAL RESIDENTIAL CODE (IRC).
2. VERIFY PLAN DIMENSIONS AND FLOOR/CEILING ELEVATIONS(T.O.P.) WITH ARCHITECTURAL PLANS. NOTIFY ENGINEER OF RECORD OF DISCREPANCIES.
3. REFER TO GENERAL NOTES (S0) FOR MATERIAL PROPERTIES AND CONSTRUCTION RECOMMENDATIONS.
4. AT A MINIMUM, DOUBLE JOISTS AT HVAC UNIT LOCATIONS.
5. NOTIFY THE ENGINEER OF RECORD IF FIELD CONDITIONS DON'T ALLOW FRAMING MEMBERS TO BE PLACED AS SHOWN ON PLANS.
6. REFER TO TYPICAL DETAIL SHEET FOR MULTIPLE MEMBER CONNECTION DETAIL(S).

HEADER LEGEND	
LABEL	FRAMING
(H4)	(2) 2X4 (H)
(H6)	(2) 2X6 (H)
(H8)	(2) 2X8 (H)
(H10)	(2) 2X10 (H)
(H12)	(2) 2X12 (H)

LEGEND	
SYMBOL	DESCRIPTION
— — —	2.0E MICROLLAM LVL BEAM
— — —	#2 SOUTHERN YELLOW PINE 2x HEADER
———	CEILING JOISTS (REF. PLAN)

2ND FLOOR - CEILING FRAMING

SCALE: 1/8"=1'-0"

9201 HWY 29
GEORGETOWN, TX 78628
(512) 215-4364
F-15009
SOLUTIONS

802 PRESSLER
AUSTIN, TEXAS 78703

STATE OF TEXAS
MARCOS V. DEQUEIROGA
101049
LICENSED PROFESSIONAL ENGINEER

NO.	REVISION	DATE
1.	REVIEW SET	09-22-17

PROJECT: 16490
DATE: 09-22-17
DRAWN BY: MS

SCALE: AS NOTED

S3.2

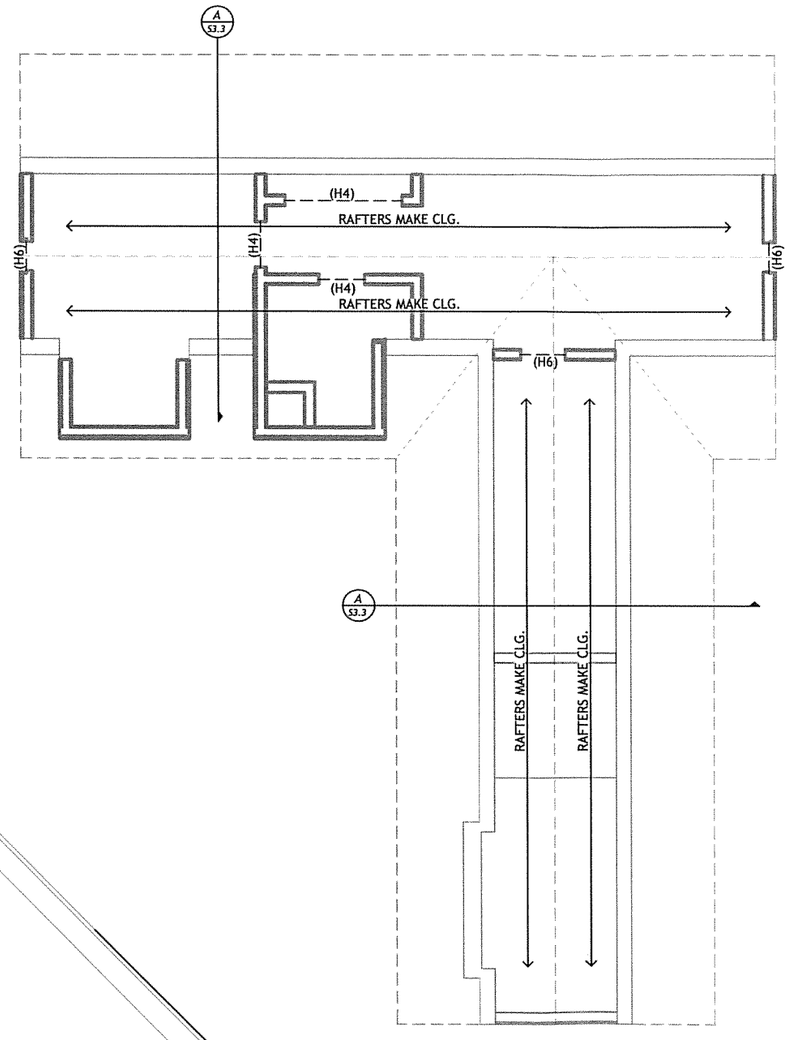

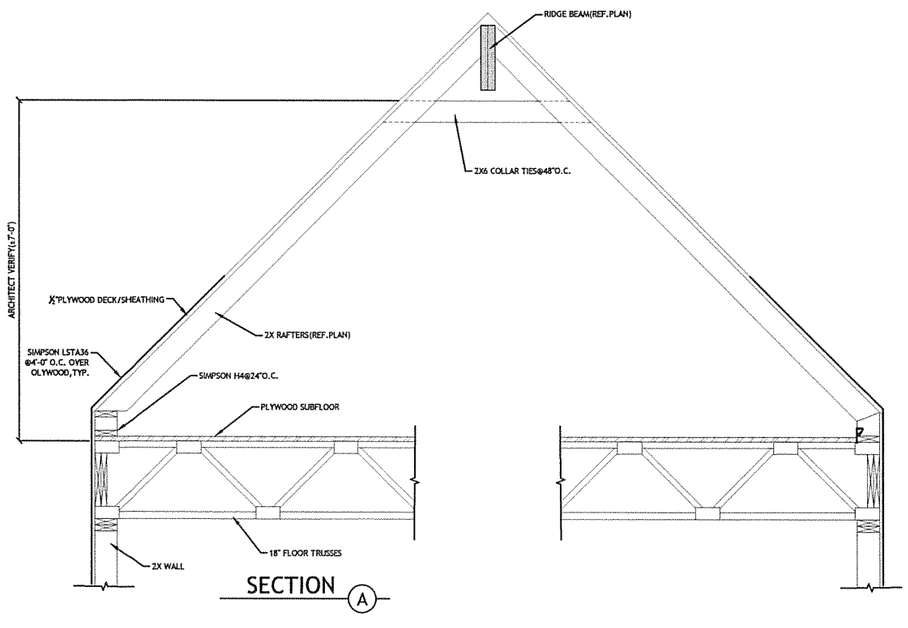

SECTION A

PLAN NOTES

1. ALL CONSTRUCTION PER CURRENT EDITION OF THE INTERNATIONAL RESIDENTIAL CODE (IRC).
2. VERIFY PLAN DIMENSIONS AND FLOOR/CEILING ELEVATIONS(T.O.P.) WITH ARCHITECTURAL PLANS. NOTIFY ENGINEER OF RECORD OF DISCREPANCIES.
3. REFER TO GENERAL NOTES (S0) FOR MATERIAL PROPERTIES AND CONSTRUCTION RECOMMENDATIONS.
4. AT A MINIMUM, DOUBLE JOISTS AT HVAC UNIT LOCATIONS.
5. NOTIFY THE ENGINEER OF RECORD IF FIELD CONDITIONS DON'T ALLOW FRAMING MEMBERS TO BE PLACED AS SHOWN ON PLANS.
6. REFER TO TYPICAL DETAIL SHEET FOR MULTIPLE MEMBER CONNECTION DETAIL(S).

3RD FLOOR - CEILING FRAMING

SCALE: 1/8"=1'-0"

9201 HWY 29
GEORGETOWN, TX 78628
(512) 215-4364
F-15009
SEC SOLUTIONS

802 PRESSLER
AUSTIN, TEXAS 78703

STATE OF TEXAS
MARCOS V. DEQUEIROGA
101049
LICENSED
PROFESSIONAL ENGINEER

NO.	REVISION	DATE
1.	REVIEW SET	09-22-17

PROJECT:	16490
DATE:	09-22-17
DRAWN BY:	MS

SCALE: AS NOTED

S3.3

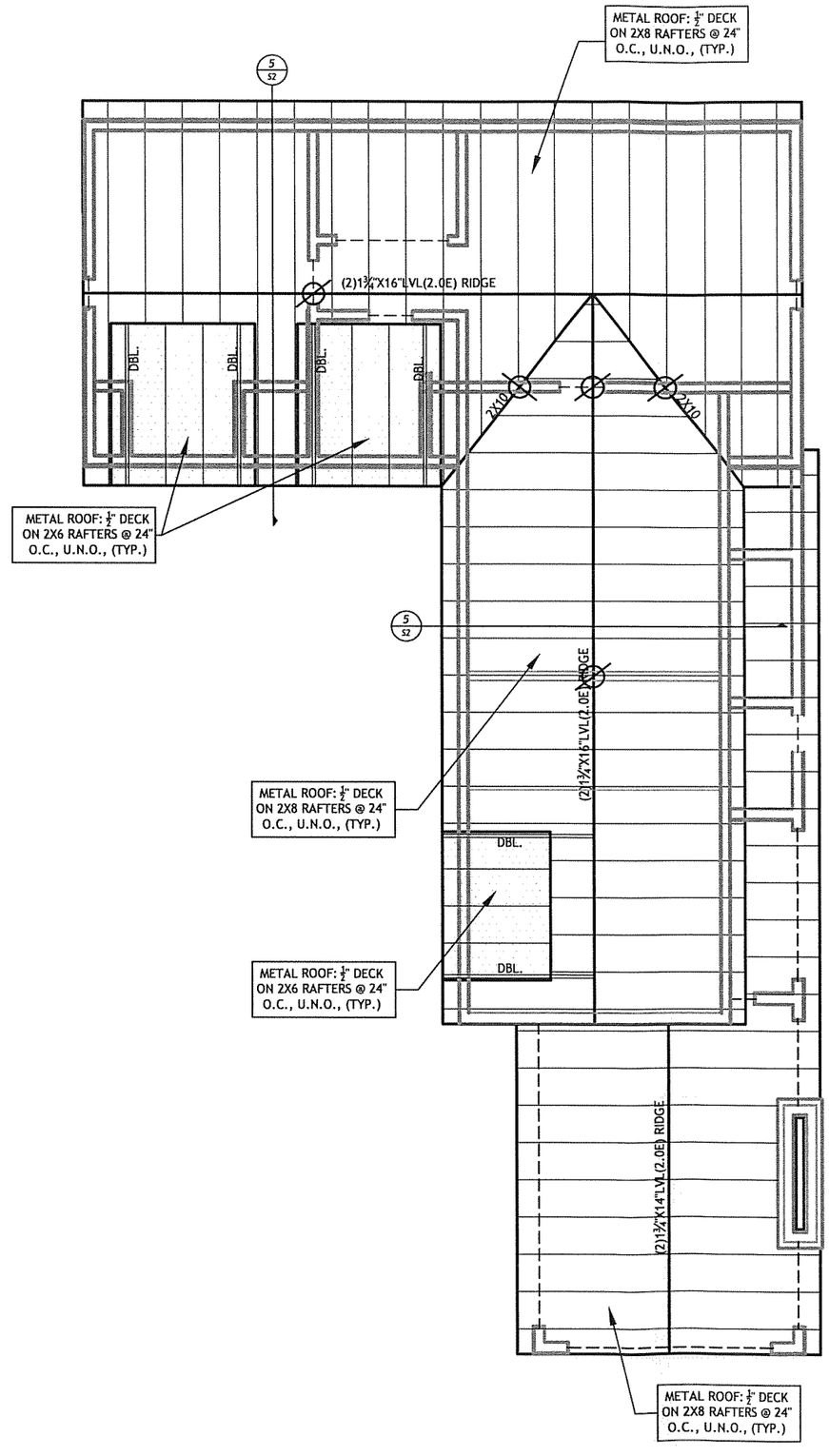

LEGEND	
SYMBOL	DESCRIPTION
	ROOF BRACE
Ø	ROOF BRACE DIRECTLY BELOW
—— · ——	2x ROOF PURLIN
———	ROOF RAFTERS (REF. PLAN)

ROOF FRAMING

SCALE: 1/8"=1'-0"

9201 HWY 29
GEORGETOWN, TX 78628
(512) 215-4364
F-15009
SEC SOLUTIONS

802 PRESSLER
AUSTIN, TEXAS 78703

STATE OF TEXAS
MARCOS V. DEQUEIROGA
101049
LICENSED
PROFESSIONAL ENGINEER

NO.	REVISION	DATE
1.	REVIEW SET	09-22-17

PROJECT: 16490
DATE: 09-22-17
DRAWN BY: MS

SCALE: AS NOTED

S4

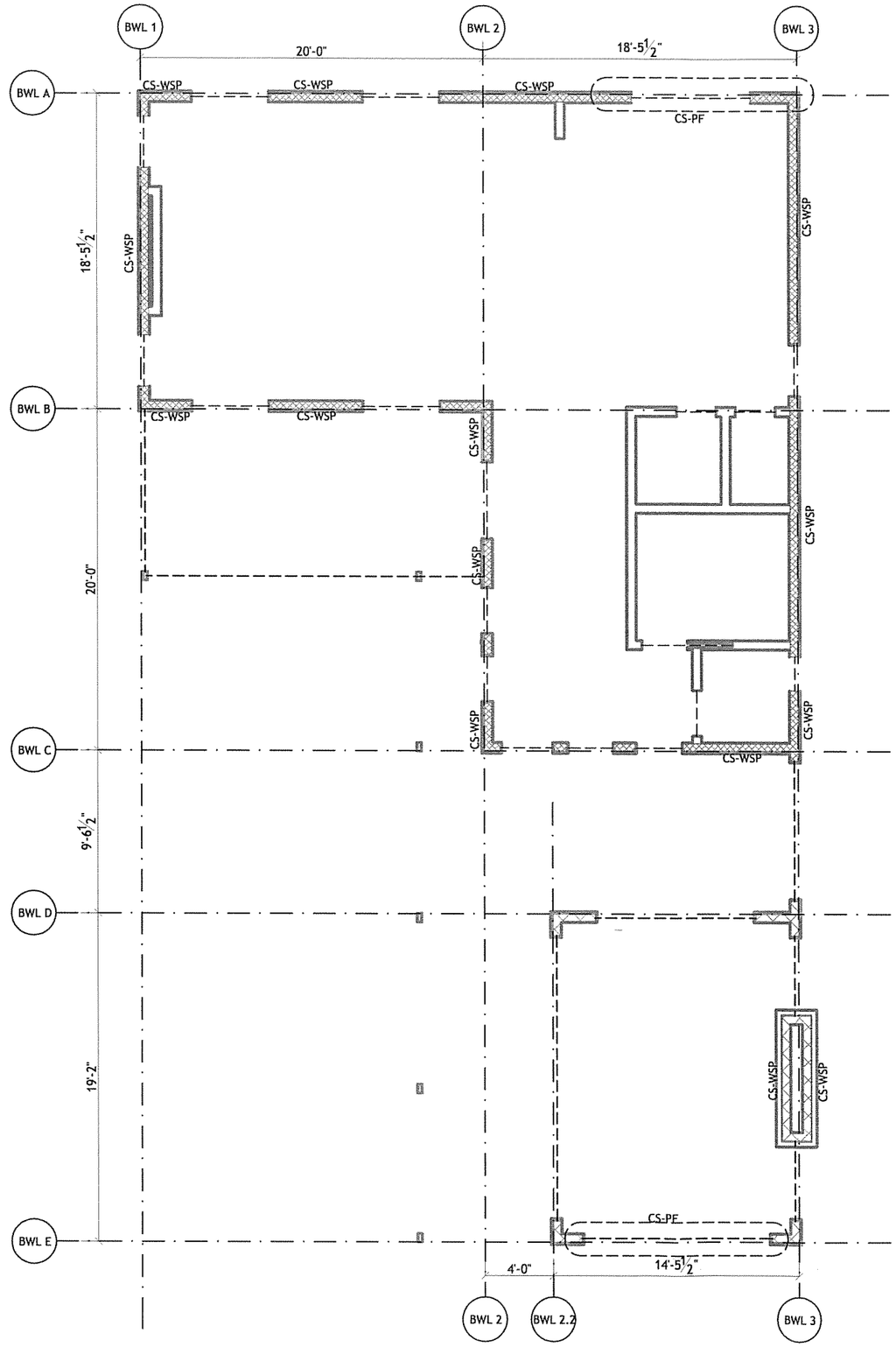

1ST FLOOR WIND BRACING PLAN

SCALE: 1/8"=1'-0"

9201 HWY 29
GEORGETOWN, TX 78628
(512) 215-4364
F-15009
SK SOLUTIONS

802 PRESSLER
AUSTIN, TEXAS 78703

STATE OF TEXAS
MARCOS V. DEQUEIROGA
101049
LICENSED PROFESSIONAL ENGINEER

NO.	REVISION	DATE
1.	REVIEW SET	09-22-17

PROJECT: 16490
DATE: 09-22-17
DRAWN BY: MS

SCALE: AS NOTED

S5.1

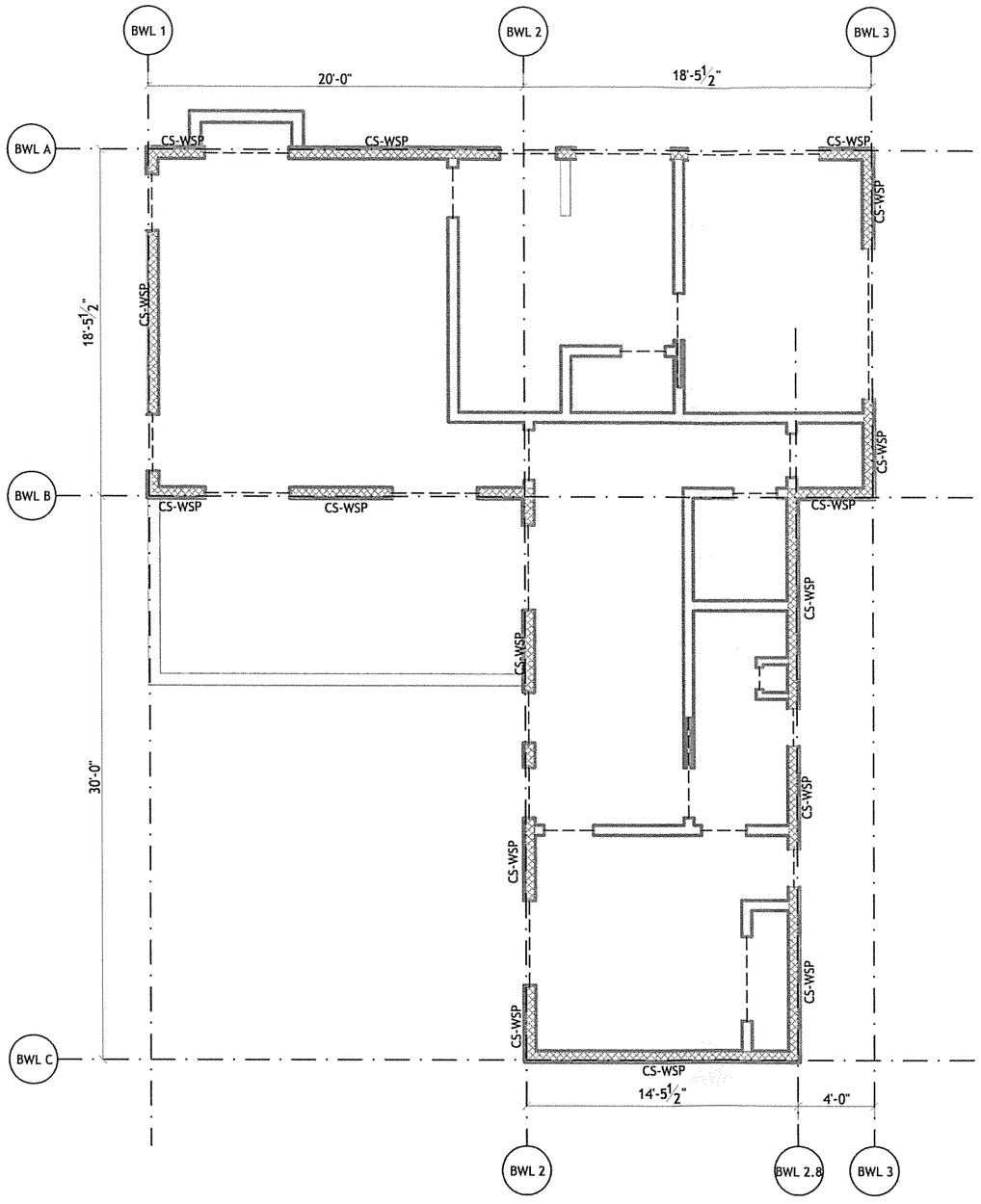

2ND FLOOR WIND BRACING PLAN

SCALE: 1/8"=1'-0"

9201 HWY 29
GEORGETOWN, TX 78628
(512) 215-4364
F-15009
SEC SOLUTIONS

802 PRESSLER
AUSTIN, TEXAS 78703

STATE OF TEXAS
MARCOS V. DEQUEIROGA
101049
LICENSED
PROFESSIONAL ENGINEER

NO.	REVISION	DATE
1.	REVIEW SET	09-22-17

PROJECT: 16490
DATE: 09-22-17
DRAWN BY: MS

SCALE: AS NOTED

S5.2

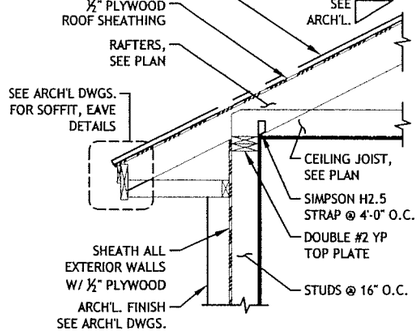

SECTION A

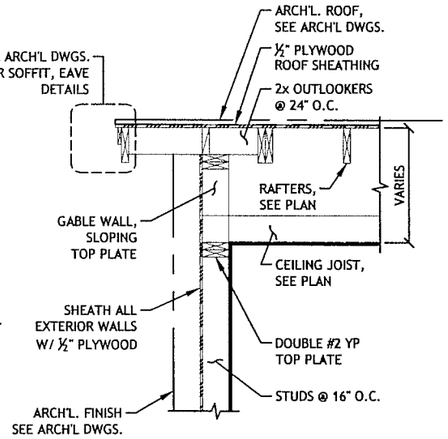

SECTION B

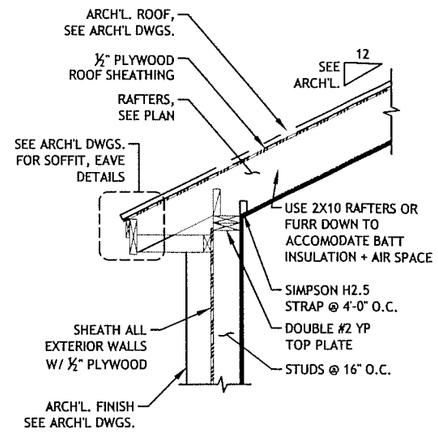

SECTION C

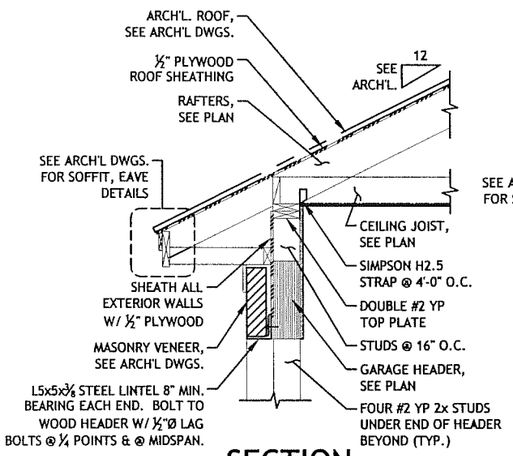

SECTION D

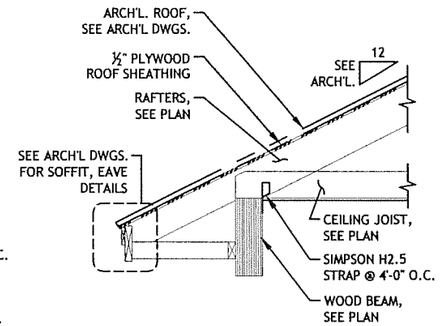

SECTION E

ALL MULTIPLE PLY-MEMBERS TO BE BOLTED OR NAILED TOGETHER, AS PER DETAIL

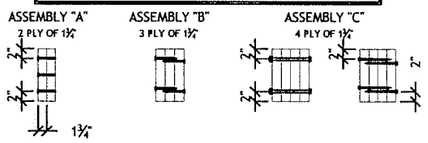

MULTIPLE MEMBER CONNECTION DETAIL

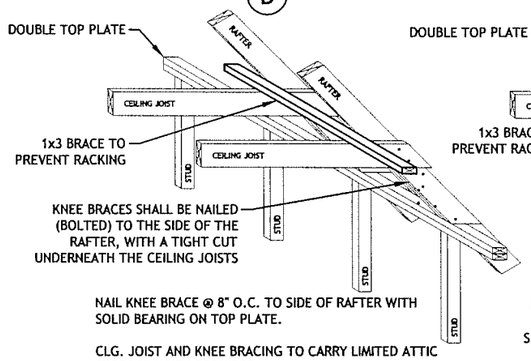

CLG. JOIST AND KNEE BRACING TO CARRY LIMITED ATTIC STORAGE WHEN REQUIRED.

LOAD IS NOT TO TRANSFER TO RAFTERS.

GAMBREL CEILING W/ KNEE BRACE

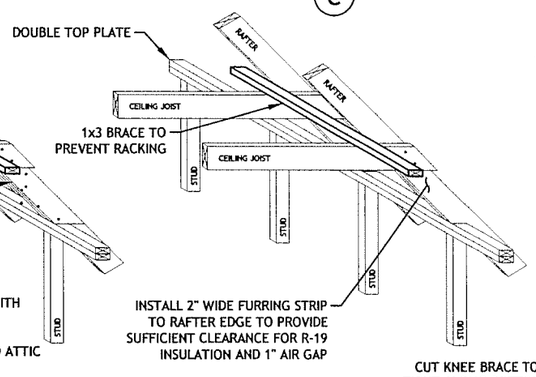

GAMBREL CEILING W/ FURRING STRIP

SECTION F

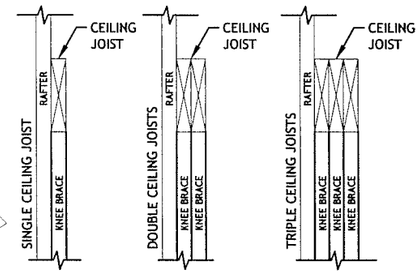

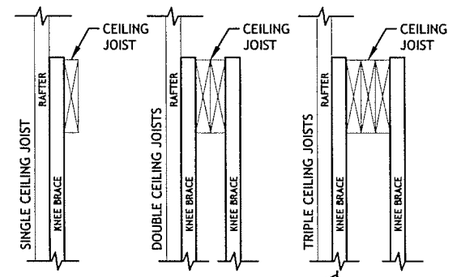

JOIST HANGER SCHEDULE	
JOIST SIZES	SIMPSON STRONG-TIE * HANGER SIZE
2X4	LU24; LUS24; U24; HU26
2X6	LUS26; LU26; U26
2X8	LUS26; LU26; LUS28; LU28; U26; HU28
2X10	LUS28; LU28; LUS210; LU210; U210; HU210
2X12	LUS210; LU210; U210; HU210; HUS210
2-2X4	LUS24-2; U24-2
2-2X6	LUS26-2; U26-2; HUS26-2
2-2X8	LUS26-2; LUS28-2; U26-2; HUS28-2
2-2X10	LUS28-2; LUS210-2; U210-2; HUS210-2
2-2X12	LUS210-2; U210-2; LUS214-2; HUS210-2; HU212-2
3-2X6	LUS26-3; U26-3; HUS26-3
3-2X8	LUS28-3; U26-3; HU26-3
3-2X10	LUS28-3; LUS210-3; U210-3; HU210-3
4-2X10	HU210-4; HUC210-4
3-2X12	LUS210-3; U210-3; HU212-3

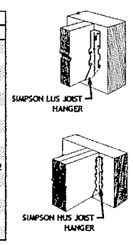

LVL BEAM HANGER SCHEDULE		
THICKNESS (IN)	DEPTH (IN)	SIMPSON STRONG-TIE * HANGER SIZE
1¾"	7¼"	HU7
	9¼" – 9½"	HU9; HUS1.81/10
	11¼" - 11¾"	HU11; HUS1.81/10
	14"	HU14; U14
3¼"	7¼"	HU48; HUS48; HGUS46; HHUS48
	9¼" – 9½"	U410; HUS410; HU410; HHUS410
	11¼" - 11¾"	U410; HUS412; HU412; HHUS410
	14"	U414; HU416; HHUS410
	16"	HU416; HGUS410; HGUS412; HGUS414
	18"	HU416; HGUS412; HGUS414
	24"	HIGH CAPACITY (HHGU)
5¼"	7¼"	HU68; HGUS5.50/8
	9¼" – 9½"	HU610; HHUS5.50/10
	11¼" - 11¾"	HU612; HHUS5.50/10
	14"	HU616; HHUS5.50/10
	16"	HU616; HHUS5.50/10
	18"	HU616; HHUS5.50/10
	24"	HIGH CAPACITY (HHGU)
7"	9¼" – 9½"	HU410-2; HHUS7.25/10
	11¼" - 11¾"	HU412-2; HHUS7.25/10
	14"	HU414-2; HHUS7.25/10
	16"	HU414-2; HHUS7.25/10
	18"	HU414-2; HHUS7.25/10
	24"	HIGH CAPACITY (HHGU)

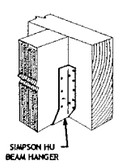

DISCLAIMER:THE DETAILS SHOWN ON THE TYPICAL DETAIL SHEET(S) ARE GENERIC AND MAY NOT BE APPLICABLE TO THIS SPECIFIC PROJECT. PLEASE VERIFY APPLICABILITY OF EACH DETAIL BEFORE USE.

ROOF FRAMING NOTES

1. ALL FRAMING MEMBERS AND CONSTRUTION TO BE PER 2015 EDITION OF INTERNATIONAL RESIDENTIAL CODE.
2. ROOF LIVE LOAD = 20 psf, REDUCIBLE PER LATEST IBC.
3. ROOF DEFLECTION CRITERIA: L/240
4. FOR FRAMING MEMBERS REFER TO NOTE 4 OF CEILING FRAMING NOTE
5. ROOF RAFTERS SHALL BE 2x8 @24 IN. O.C., U.N.O.
6. PURLINS SHALL BE 2x6 BRACED @ 4'-0" O.C., U.N.O.
7. ∅ INDICATES RIDGE, RAFTER OR PURLIN BRACING WITH BEARING POINT DIRECTLY BELOW.
   INDICATES RIDGE, RAFTER OR PURLIN BRACING WITH BEARING POINT LOCATION.
8. BRACES UP TO 6FT LONG SHALL BE 2X4. LONGER BRACES/POSTS SHALL BE MADE OF 2-2X6 FASTENED TOGETHER IN A "L" OR "T" PATTERN.
9. VERIFY ALL DIMENSIONS AGAINST ARCHITECTURAL DRAWINGS
10. PLYWOOD ROOF SHEATHING OR OSB SHALL BE ½" THICK MIN. U.N.O.
11. CLD - INDICATES CONCEALED/FLOATING BEAM. ALL OTHER BEAMS SHOWN ON PLAN TO BE DROPPED U.N.O.

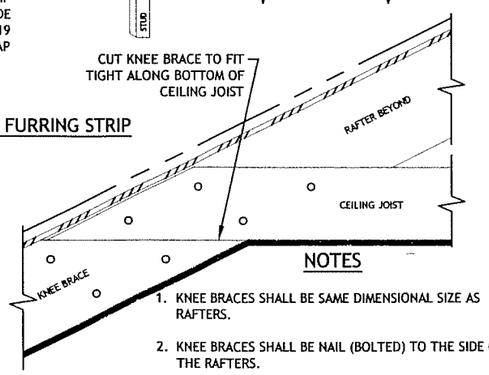

NOTES

1. KNEE BRACES SHALL BE SAME DIMENSIONAL SIZE AS RAFTERS.
2. KNEE BRACES SHALL BE NAIL (BOLTED) TO THE SIDE OF THE RAFTERS.
3. USE A MINIMUM OF 8- 16d NAILS BETWEEN EACH MEMBER, OR 4½" DIAMETER LAG SCREWS, SCREWED ALL THE WAY THROUGH THE MEMBERS.

TYP. KNEE BRACE CONNECTION DETAIL G

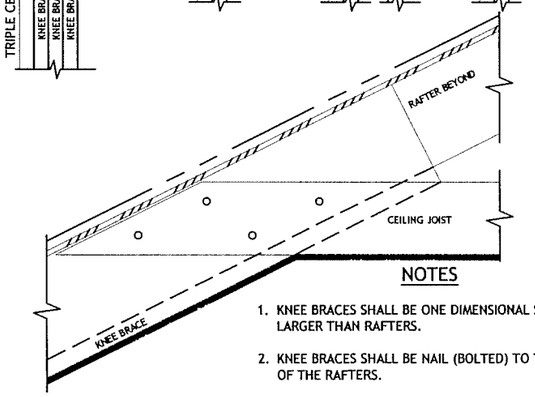

NOTES

1. KNEE BRACES SHALL BE ONE DIMENSIONAL SIZE LARGER THAN RAFTERS.
2. KNEE BRACES SHALL BE NAIL (BOLTED) TO THE SIDE OF THE RAFTERS.
3. USE A MINIMUM OF 8- 16d NAILS BETWEEN EACH MEMBER, OR 4½" DIAMETER LAG SCREWS, SCREWED ALL THE WAY THROUGH THE MEMBERS.

OPT. KNEE BRACE CONNECTION DETAIL H

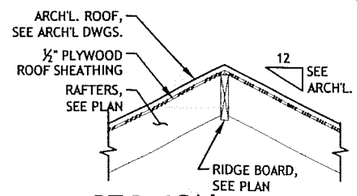

SECTION I

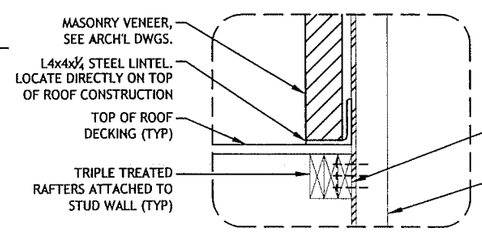

NOTE:
3x3x1/4 STEEL PLATE STOPS WELDED TO ANGLE @24" O.C.
FOR ROOF PITCH GREATER THAN 7:12 BUT NO MORE THAN 12:12

TYPICAL MASONRY OVER ROOF J

9201 HWY 29
GEORGETOWN, TX 78628
(512) 215-4364
F-15009
SEC SOLUTIONS

802 PRESSLER
AUSTIN, TEXAS 78703

STATE OF TEXAS
MARCOS V. DEQUEIROGA
101049
LICENSED PROFESSIONAL ENGINEER

NO.	REVISION	DATE
1.	REVIEW SET	09-22-17

PROJECT: 16490
DATE: 09-22-17
DRAWN BY: MS

SCALE: AS NOTED

S6.1

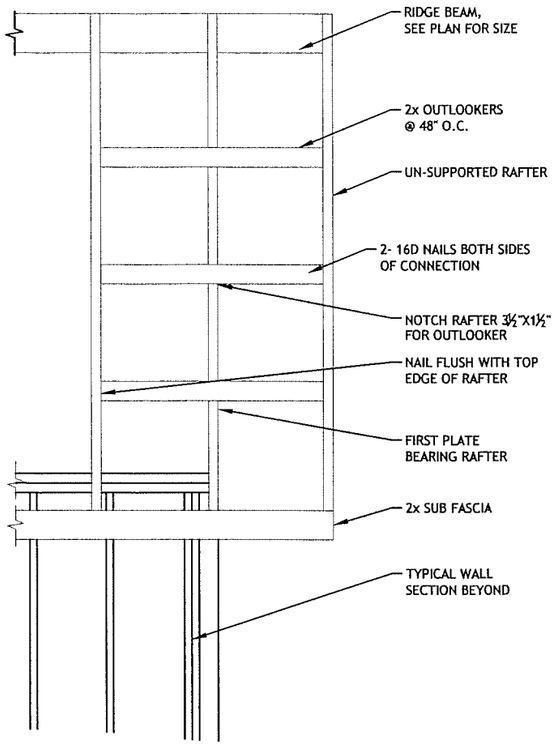

TYP. OUTLOOKER DETAIL (1)

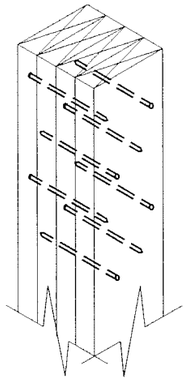

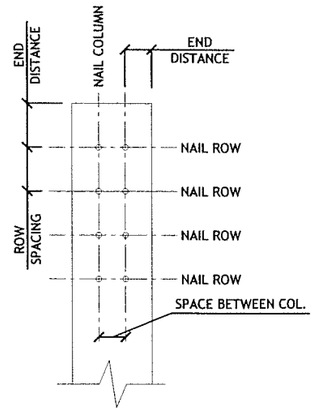

	(3) 2x4	(4) 2x4	(3) 2x6	(4) 2x6	(6) 2x6
# OF NAILS PER ROW	1	1	2	2	2
NAIL SIZE	30d	30d	50d	50d	50d
END DISTANCE	3.5"	3.75"	3.5"	3.75"	3.5"
EDGE DISTANCE	1.5"	1.5"	1.5"	1.5"	1.5"
SPACE BETWEEN ROWS	8	9	8	9	6
SPACE BETWEEN COLUMNS	0.5"	0.5"	2.5"	2.5"	2.5"

WHEN ONE NAIL PER ROW IS SPECIFIED, NAILS IN ADJACENT ROWS SHALL BE DRIVEN FROM OPPOSITE SIDES IN OPPOSITE COLUMNS.

4 1/2" SIMPSON SDS SCREWS MAY REPLACE 30D NAILS & 6" SIMPSON SDS SCREWS MAY REPLACE 50D NAILS.

SOLID TIMBER MEMBERS OF EQUAL OR GREATER SIZE MAY BE USED INSTEAD OF SPECIFIED STUD PACKS.

STUD PACK CONN. (2)

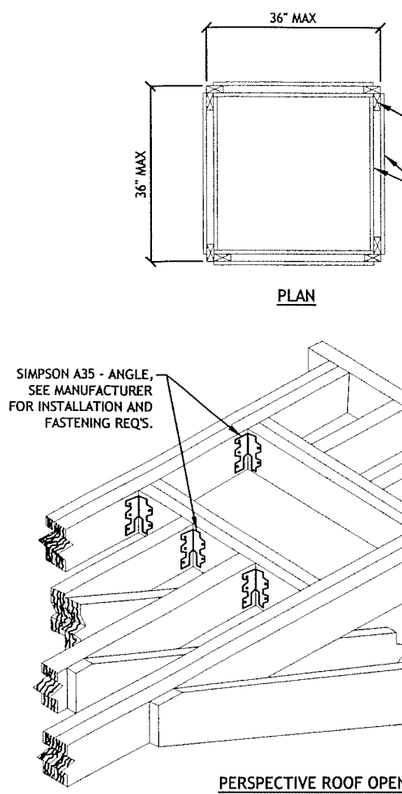

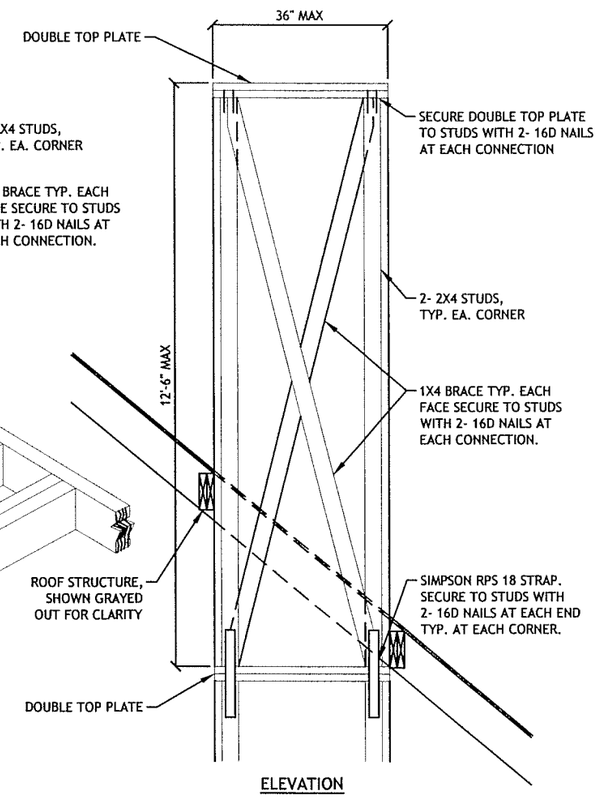

CHIMNEY FRAMING DETAIL (3)

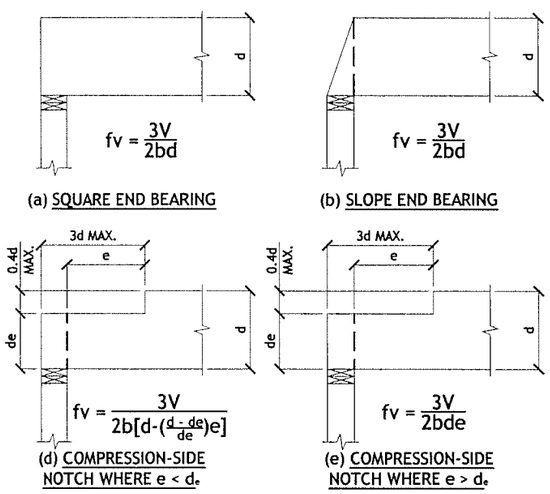

f_v= SHEAR STRESS (psi) V= SHEAR FORCE AT NOTCH LOCATION (lbs) b= WIDTH OF BEAM
d= DEPTH OF BEAM d_e= EFFECTIVE DEPTH AS SHOWN (inches) e= LENGTH AS SHOWN (inches)

SHEAR WALL DESIGN EQUATIONS FOR NOTCHED AND TAPERED BEAMS (4)

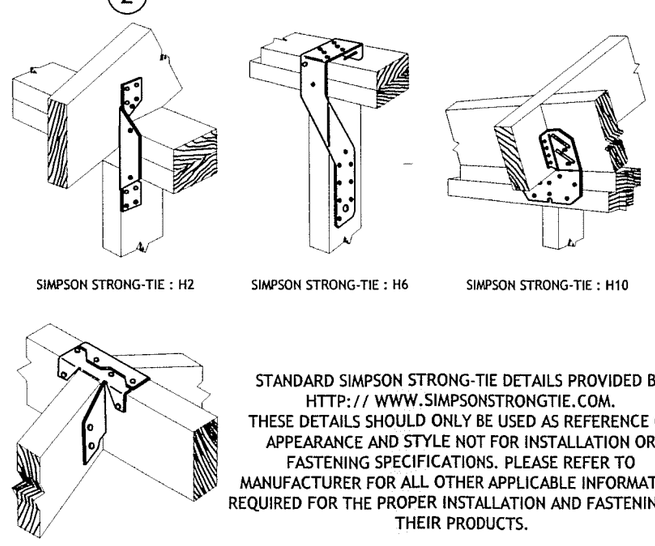

STANDARD SIMPSON STRONG-TIE DETAILS PROVIDED BY HTTP:// WWW.SIMPSONSTRONGTIE.COM. THESE DETAILS SHOULD ONLY BE USED AS REFERENCE OF APPEARANCE AND STYLE NOT FOR INSTALLATION OR FASTENING SPECIFICATIONS. PLEASE REFER TO MANUFACTURER FOR ALL OTHER APPLICABLE INFORMATION REQUIRED FOR THE PROPER INSTALLATION AND FASTENING OF THEIR PRODUCTS.

SIMPSON STRONG-TIE DETAILS (5)

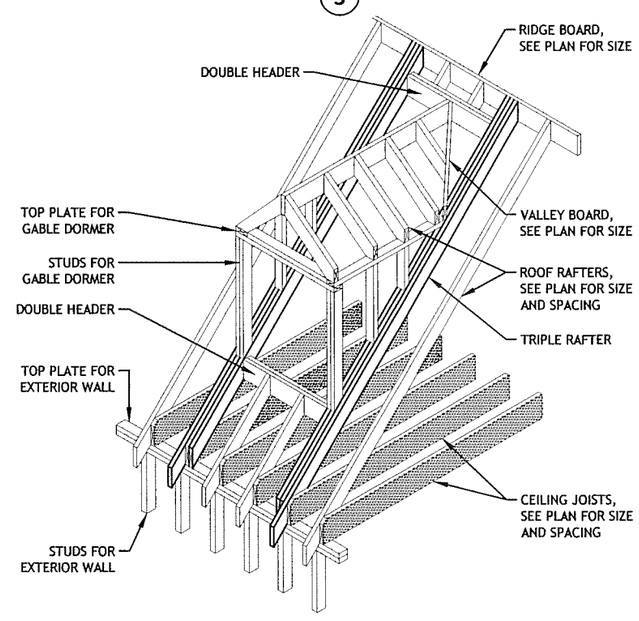

TYPICAL DORMER FRAMING (6)

9201 HWY 29
GEORGETOWN, TX 78628
(512) 215-4364
F-15009
SEC SOLUTIONS

802 PRESSLER
AUSTIN, TEXAS 78703

STATE OF TEXAS
MARCOS V. DEQUEIROGA
101049
LICENSED PROFESSIONAL ENGINEER

NO.	REVISION	DATE
1.	REVIEW SET	09-22-17

PROJECT:	16490
DATE:	09-22-17
DRAWN BY:	MS

SCALE: AS NOTED

S6.2

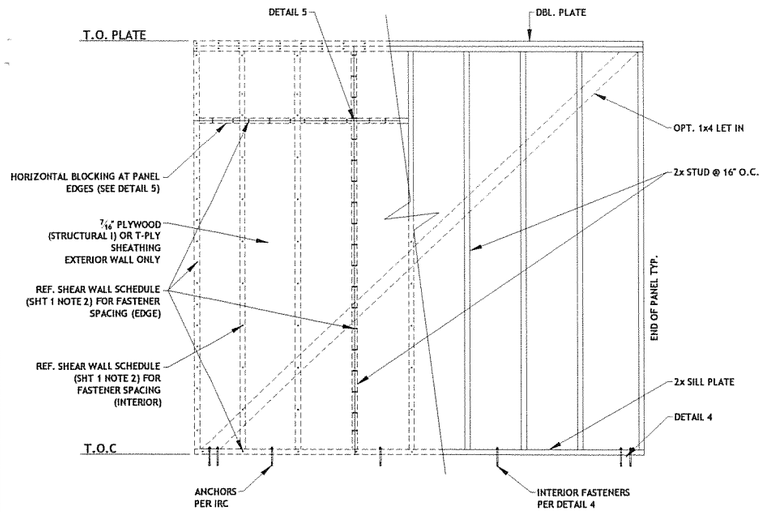

ONE STORY WALL PANEL (1)

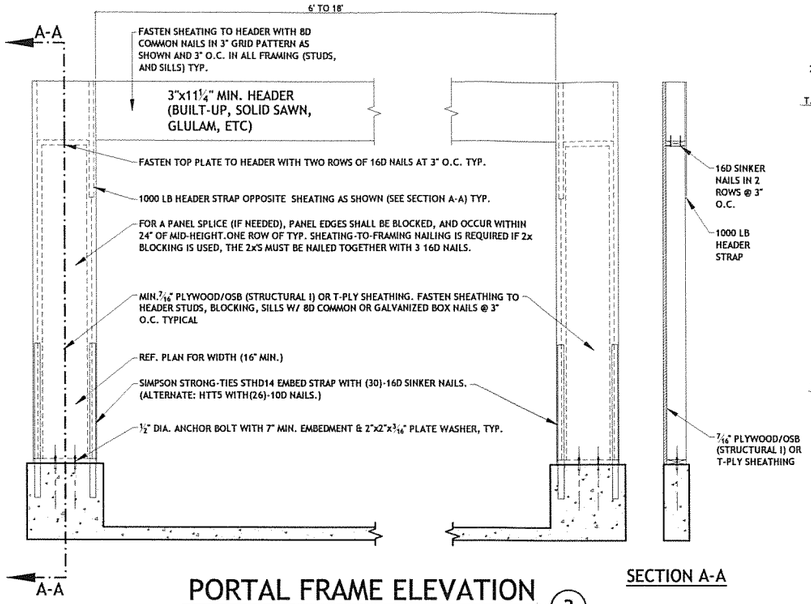

PORTAL FRAME ELEVATION (3)

SECTION A-A

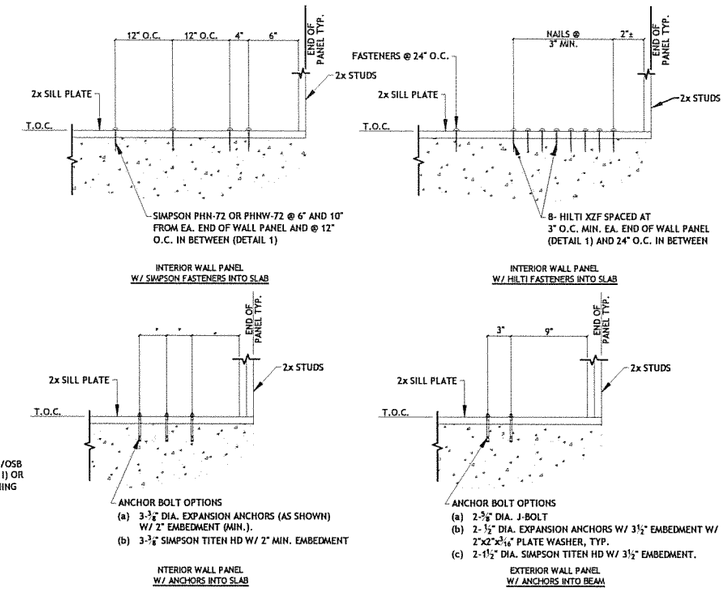

SHEAR WALL TO FOUNDATION (4)

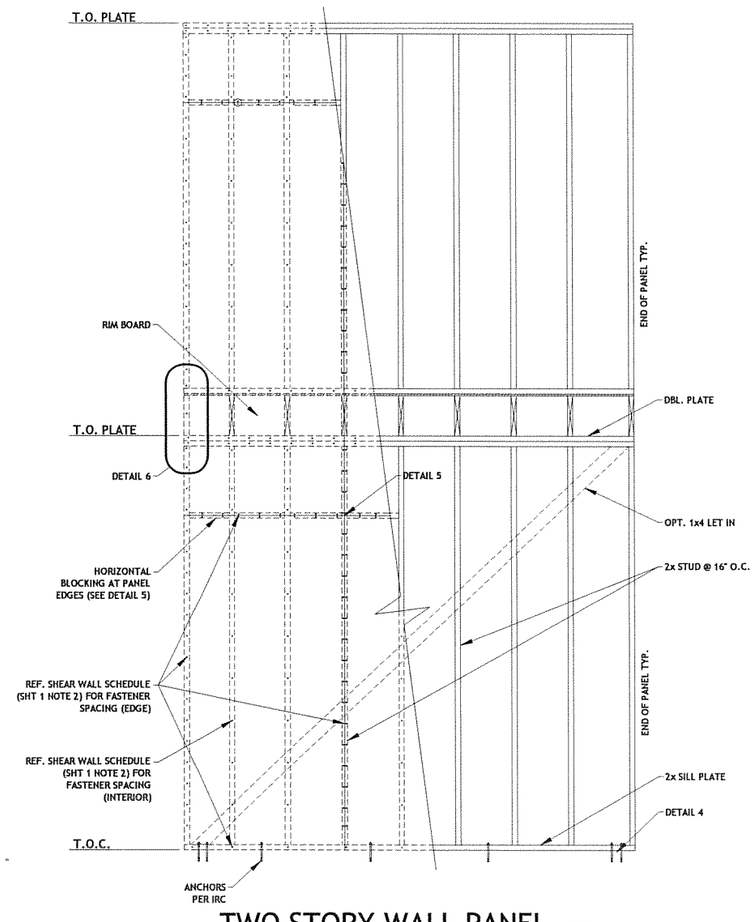

TWO STORY WALL PANEL (2)

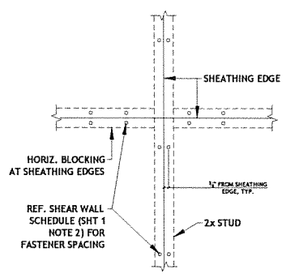

SHEAR WALL PANEL DETAIL (5)

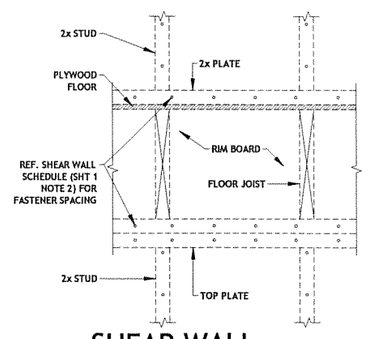

SHEAR WALL CONNECTION (6)

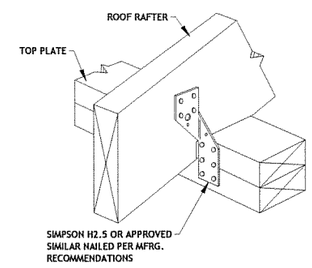

RAFTER @ PERIMETER WALL (7)

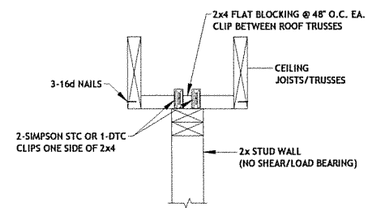

TYPICAL NON SHEAR/ BEARING WALL CONN. (8)

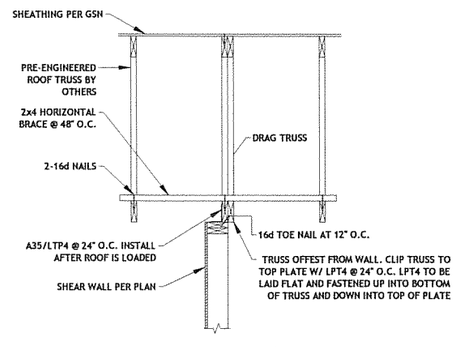

DRAG TRUSS AT SHEAR WALL (9)

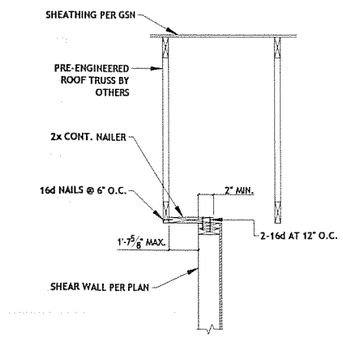

DRAG TRUSS AT SHEAR WALL (10)

PLYWOOD / OSB

NOTES:

1. WIND LOADS PER 2012 INTERNATIONAL BUILDING CODE:
   BASIC WIND SPEED: 90 MPH (3 SEC. GUST)
   EXPOSURE: B
   BUILDING CATEGORY II
   I = 1.0
2. SHEATHING TO BE 7/16"STRUCTURAL PLYWOOD OR OSB.
   ATTACH WITH/ FASTENERS 6" O.C. @ EDGES AND 12" O.C. INTERMEDIATE STUDS. PER 2012 IRC. TABLE R602.3 (1).
   2x STUDS AT 24" O.C.. FASTEN STUDS PER LATEST IRC.
3. FASTENERS BETWEEN PANEL ENDS SHALL BE PER LATEST IRC.
4. USE SECTION 1 FOR 1x4 LET-IN BRACED WALL

9201 HWY 29
GEORGETOWN, TX 78628
(512) 215-4364
F-15009
SOLUTIONS

802 PRESSLER
AUSTIN, TEXAS 78703

STATE OF TEXAS
MARCOS V. DEQUEIROGA
101049
LICENSED PROFESSIONAL ENGINEER

NO.	REVISION	DATE
1.	REVIEW SET	09-22-17

PROJECT: 16490
DATE: 09-22-17
DRAWN BY: MS

SCALE: AS NOTED

S6.3