C01/1

CITY OF AUSTIN
Board of Adjustment
Decision Sheet

DATE: JULY 9, 2018 **CASE NUMBER: C16-2018-0003**

_____ Brooke Bailey
_____ William Burkhardt
_____ Christopher Covo
_____ Eric Golf
_____ Melissa Hawthorne
_____ Bryan King
_____ Don Leighton-Burwell
_____ Rahm McDaniel OUT
_____ Martha Gonzalez (Alternate)
_____ Veronica Rivera
_____ James Valdez
_____ Michael Von Ohlen
_____ Kelly Blume (Alternate)
_____ Pim Mayo (Alternate)

APPLICANT: Phil Moncada

OWNER: Greg Cervenka

ADDRESS: 1044 NORWOOD PARK BLVD Unit C-6

VARIANCE REQUESTED: The applicant has requested a variance(s) to Section 25-10-123(B)(3)(Expressway Corridor Sign District Regulations) to increase the maximum allowable sign height from 35 feet (required/permitted) to 50 feet (requested, existing) in order to erect a sign at this site in the Expressway Corridor Sign District within a "CH-NP", Commercial Highway Services – Neighborhood Plan zoning district. (Heritage Hills)

BOARD'S DECISION: BOA meeting June 11, 2018 The public hearing was closed on Board Member Brooke Bailey motion to Postpone to July 9, 2018, Board Member Eric Goff second on a 10-0 vote; POSTPONED TO July 9, 2018 (RE-NOTICE); July 9, 2018 POSTPONED TO AUGUST 13, 2018 BY APPLICANT

FINDING:

1. The Zoning regulations applicable to the property do not allow for a reasonable use because:
2. (a) The hardship for which the variance is requested is unique to the property in that:
   (b) The hardship is not general to the area in which the property is located because:
3. The variance will not alter the character of the area adjacent to the property, will not impair the use of adjacent conforming property, and will not impair the purpose of the regulations of the zoning district in which the property is located because:

C01/2

Leane Heldenfels
Executive Liaison

William Burkhardt
Chairman

CITY OF AUSTIN
Board of Adjustment
Decision Sheet

DATE: June 11, 2018 **CASE NUMBER: C16-2018-0003**

___Y____ Brooke Bailey
___Y____ William Burkhardt
___Y____ Christopher Covo
___Y____ Eric Golf
___-____ Melissa Hawthorne OUT
___Y____ Bryan King
___Y____ Don Leighton-Burwell
___-____ Rahm McDaniel OUT
___-____ Martha Gonzalez (Alternate) OUT
___Y____ Veronica Rivera
___Y____ James Valdez
___Y____ Michael Von Ohlen
___Y____ Kelly Blume (Alternate)
___-____ Pim Mayo (Alternate) OUT

APPLICANT: Phil Moncada

OWNER: Greg Cervenka

ADDRESS: 1044 NORWOOD PARK BLVD Unit C-6

VARIANCE REQUESTED: The applicant has requested a variance(s) to Section 25-10-123(B)(3)(Expressway Corridor Sign District Regulations) to increase the maximum allowable sign height from 35 feet (required/permitted) to 50 feet (requested, existing) in order to erect a sign at this site in the Expressway Corridor Sign District within a "CH-NP", Commercial Highway Services – Neighborhood Plan zoning district. (Heritage Hills)

BOARD'S DECISION: BOA meeting June 11, 2018 The public hearing was closed on Board Member Brooke Bailey motion to Postpone to July 9, 2018, Board Member Eric Goff second on a 10-0 vote; POSTPONED TO July 9, 2018 (RE-NOTICE)

FINDING:

1. The Zoning regulations applicable to the property do not allow for a reasonable use because:
2. (a) The hardship for which the variance is requested is unique to the property in that:
   (b) The hardship is not general to the area in which the property is located because:
3. The variance will not alter the character of the area adjacent to the property, will not impair the use of adjacent conforming property, and will not impair the purpose of the regulations of the zoning district in which the property is located because:

C01/4

From: [redacted]
To: Heldenfels, Leane
Subject: Re: Can request postpone NOrwood/Wal Mart today to the 8/13 hearing and I can re-send corrected notice for the 8/13 hearing instead - if you"d like
Date: Monday, June 25, 2018 1:58:18 PM
Attachments: image001.png

Leane,

Can we postpone this so we can get more time.

Thank you,

Phil Moncada

Phil Moncada
Moncada Enterprises, LLC
1301 S IH 35 Ste. 204
Austin, TX 78741
512.627.8815 (c)
512.474.7377(o)

On Mon, Jun 25, 2018 at 12:10 PM, Heldenfels, Leane <Leane.Heldenfels@austintexas.gov> wrote:

> FYi –
>
> **Leane Heldenfels**
>
> *Planner Senior – Board of Adjustment Liaison*
>
> City of Austin Development Services Department
>
> One Texas Center, 505 Barton Springs Road, 1st Floor, Development Assistance Center
>
> Walk-in hours 9a-12p M-F
>
> Office: 512.974.2202 Cell: 512.567.0106 *(personal, for meeting day & after hours emergency use only)*

C01/5

From: Heldenfels, Leane
To: Ramirez, Diana
Subject: c16-2018-0003, 1044 Norwood Park july late back up request for postponement
Date: Monday, July 09, 2018 11:36:27 AM

From: [redacted]
Sent: Monday, July 09, 2018 7:40 AM
To: Heldenfels, Leane
Cc: [redacted]
Subject: 1044 Norwood Park

Good Morning Leane,

We are requesting a postponement for the above referenced address because the owner's representative is out of town and wanted to attend the meeting. In addition, he is in discussions with the property owner of that parcel regarding the location of the sign.

Thank you,

Phil Moncada
Moncada Enterprises, LLC
1301 S IH 35 Ste. 204
Austin, TX 78741
512.627.8815 (c)
512.474.7377(o)

C01/6

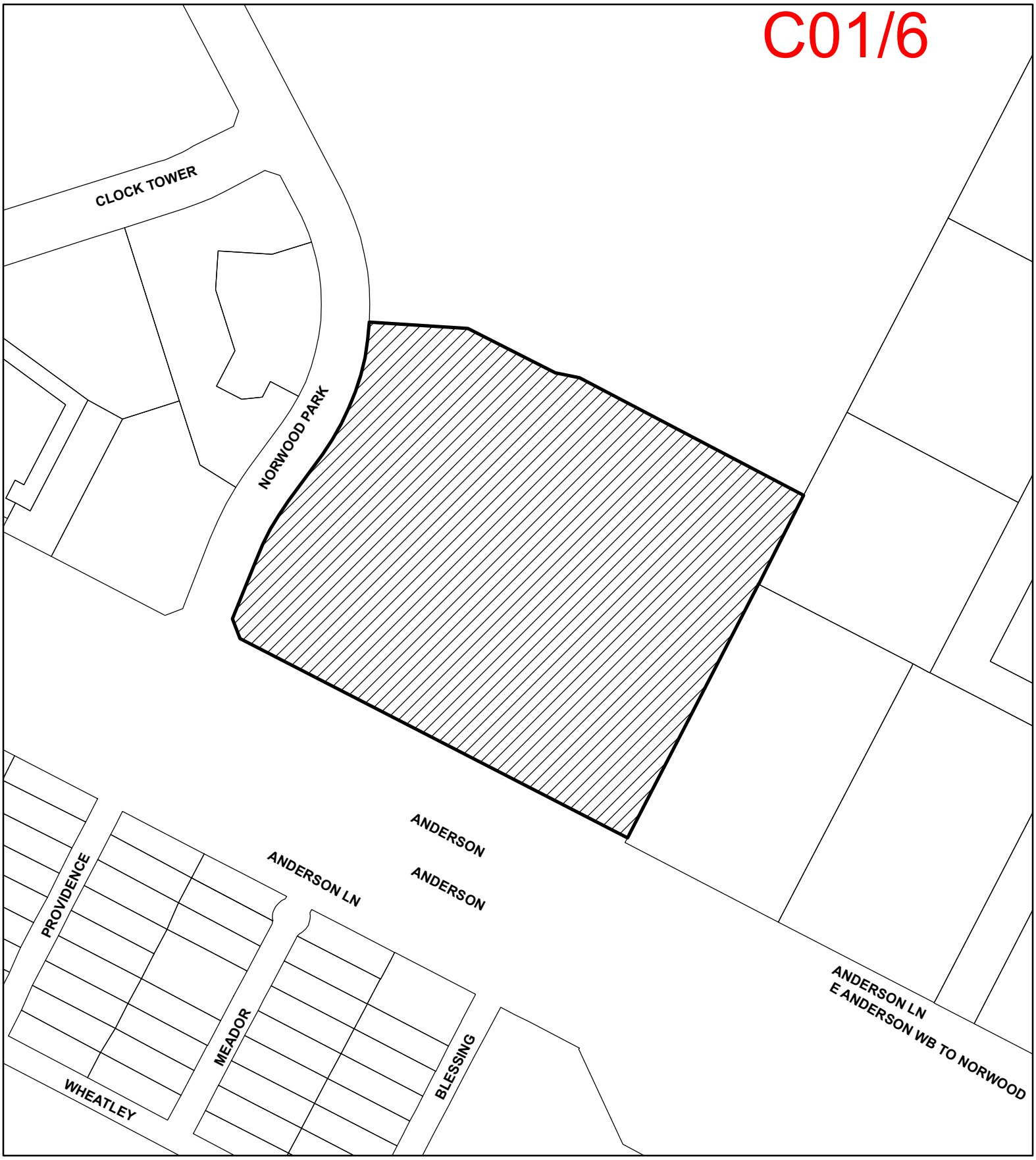

N

SUBJECT TRACT

PENDING CASE

ZONING BOUNDARY

1 " = 225 '

NOTIFICATIONS

CASE#: C16-2018-0003

LOCATION: 1044 Norwood Park Boulevard

This product is for informational purposes and may not have been prepared for or be suitable for legal, engineering, or surveying purposes. It does not represent an on-the-ground survey and represents only the approximate relative location of property boundaries.

This product has been produced by CTM for the sole purpose of geographic reference. No warranty is made by the City of Austin regarding specific accuracy or completeness.

C01/7

Board of Adjustment Sign Variance Application

WARNING: Filing of this appeal stops all affected construction activity.

This application is a fillable PDF that can be completed electronically. To ensure your information is saved, click here to Save the form to your computer, then open your copy and continue.

The Tab key may be used to navigate to each field; Shift + Tab moves to the previous field. The Enter key activates links, emails, and buttons. Use the Up & Down Arrow keys to scroll through drop-down lists and check boxes, and hit Enter to make a selection.

The application must be complete and accurate prior to submittal. All information is required (if applicable).

For Office Use Only

Case # C16-2018-0003 ROW # 11946473 Tax # 0231180607 TCAD

Section 1: Applicant Statement

Street Address: 1044 Norwood Park Blvd.

Subdivision Legal Description:

LOT 5 LESS .2464 AC WAL-MART AT NORWOOD PARK SUBD RESUB OF LOTS 1A,1B & 1C & LOT 2 REPLAT OF NORWOOD PARK

Lot(s): Block(s):

Outlot: Division:

Zoning District: CH-NP (Heritage Hills)

Sign District:

I/We Phil Moncada on behalf of myself/ourselves as authorized agent for Norwood Park Association, Inc affirm that on Month April , Day 25 , Year 2018 , hereby apply for a hearing before the Board of Adjustment for consideration to (select appropriate option below):

○ Erect ○ Attach ○ Complete ○ Remodel ○ Maintain ◉ Other: relocate/height increase

Type of Sign: pylon

Portion of the City of Austin Land Development Code applicant is seeking a variance from:

25-10

Section 2: Variance Findings

The Board must determine the existence of, sufficiency of, and weight of evidence supporting the findings described below. In order to grant your request for a variance, the Board must first make one or more of the findings described under 1, 2, and 3 below; the Board must then make the finding described in item 4 below. If the Board cannot make the required findings, it cannot approve a sign variance.

Therefore, you must complete each of the applicable Findings Statements as part of your application. Failure to do so may result in your application being rejected as incomplete. Please attach any additional supporting documents.

I contend that my entitlement to the requested variance is based on the following findings:

1. The variance is necessary because strict enforcement of the Article prohibits any reasonable opportunity to provide adequate signs on the site, considering the unique features of the site such as dimensions, landscaping, or topography, because:

TXDOT ROW Condemnation process has already removed signage for additional ROW. In addition, existing trees and speed limit an access road, hinder view of pylon sign unless additional height is granted.

—OR—

2. The granting of this variance will not have a substantially adverse impact upon neighboring properties, because:

Sign is on access and surrounded by commercial properties.

—OR—

3. The granting of this variance will not substantially conflict with the stated purposes of this sign ordinance, because:

Sign was existing at this location and height increase is warranted due to line and sight associated with access road.

AND,

4. Granting a variance would not provide the applicant with a special privilege not enjoyed by others similarly situated or potentially similarly situated, because:

This board has previously granted height increase on signs associated with trees impacting visibility for the motoring public.

Section 3: Applicant Certificate

I affirm that my statements contained in the complete application are true and correct to the best of my knowledge and belief.

Applicant Signature: Phil Moncada Digitally signed by Phil Moncada Date: 2018.04.10:35:15 -05'00' Date: 04/19/2018

Applicant Name (typed or printed): Phil Moncada

Applicant Mailing Address: 1301 S IH 35, Ste 204

City: Austin State: TX Zip: 78741

Phone (will be public information): (512) 627-8815

Email (optional – will be public information): [redacted]

Section 4: Owner Certificate

I affirm that my statements contained in the complete application are true and correct to the best of my knowledge and belief.

Owner Signature: Greg Cervenka, Boardmember Date: 4/24/18

Owner Name (typed or printed): Norwood Park Association, Inc.

Owner Mailing Address: PO Box 161150

City: Austin State: TX Zip: 78716

Phone (will be public information): (512) 485-4334

Email (optional – will be public information):

Section 5: Agent Information

Agent Name: Greg Cervenka

Agent Mailing Address: PO BOX 161150

City: Austin State: TX Zip: 78716

Phone (will be public information): (512) 485-4335

Email (optional – will be public information):

SAVE

Section 3: Applicant Certificate

I affirm that my statements contained in the complete application are true and correct to the best of my knowledge and belief.

Applicant Signature: _____ Date: _____

Applicant Name (typed or printed): _____

Applicant Mailing Address: _____

City: _____ State: _____ Zip: _____

Phone (will be public information): _____

Email (optional – will be public information): _____

Section 4: Owner Certificate

I affirm that my statements contained in the complete application are true and correct to the best of my knowledge and belief.

Owner Signature: William S Harris Date: _____

Owner Name (typed or printed): Strategic Housing Finance Corporation of Travis County, a Texas housing Finance corporation

Owner Mailing Address: 502 East Highland Mall Blvd. Ste 106-B Austin, TX 78752

City: Austin State: TX Zip: 78752

Phone (will be public information): 502-931-5795

Email (optional – will be public information): _____

Section 5: Agent Information

Agent Name: _____

Agent Mailing Address: _____

City: _____ State: _____ Zip: _____

Phone (will be public information): _____

Email (optional – will be public information): _____

SAVE

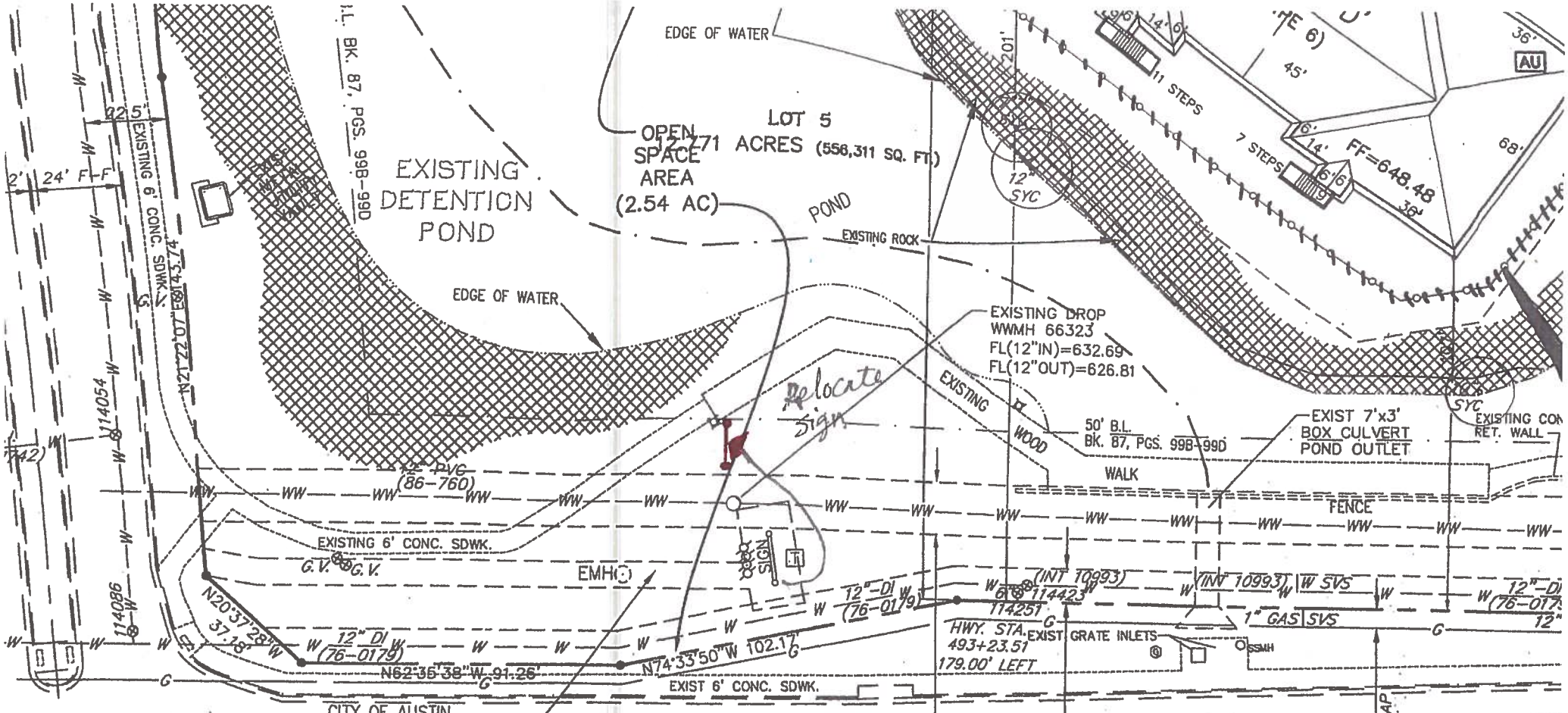

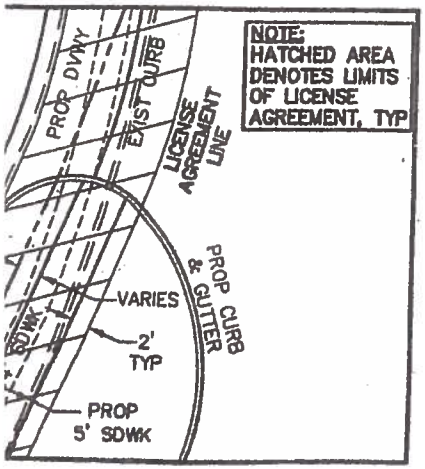

ETAIL 'A'

SCALE: 1"=20'

PARKING REQUIRED

UNIT	NUMBER	PARKING REQUIREMENT	TOTAL SPACES REQUIRED
1 BEDROOM	36	1.5 SPACES PER UNIT	54
2 BEDROOM	108	2.0 SPACES PER UNIT	216
3 BEDROOM	84	2.5 SPACES PER UNIT	210
		TOTAL	480

PARKING PROVIDED

FULL SIZED	329
COMPACT	137
HANDICAPPED	14
TOTAL	480

C01/11

C01/12

Y.J INC. SIGN ENGINEER

April 19, 2018

Structural Calculations

Prepared For:

Facility Solutions Group
10212 Metric Blvd.
Austin, TX. 78758

Project:

JTS_74218
Norwood Assn – Pylon A
1030 Norwood Park Blvd.
Austin, TX

Prepared By:

YJ Inc.
P.O. Box 802050
Santa Clarita, CA 91380

STATE OF TEXAS
TONY JACOB
117533
LICENSED
PROFESSIONAL ENGINEER

APR 19 2018

YJ Inc.
F-19272

Total 4 - pages including cover

C01/13

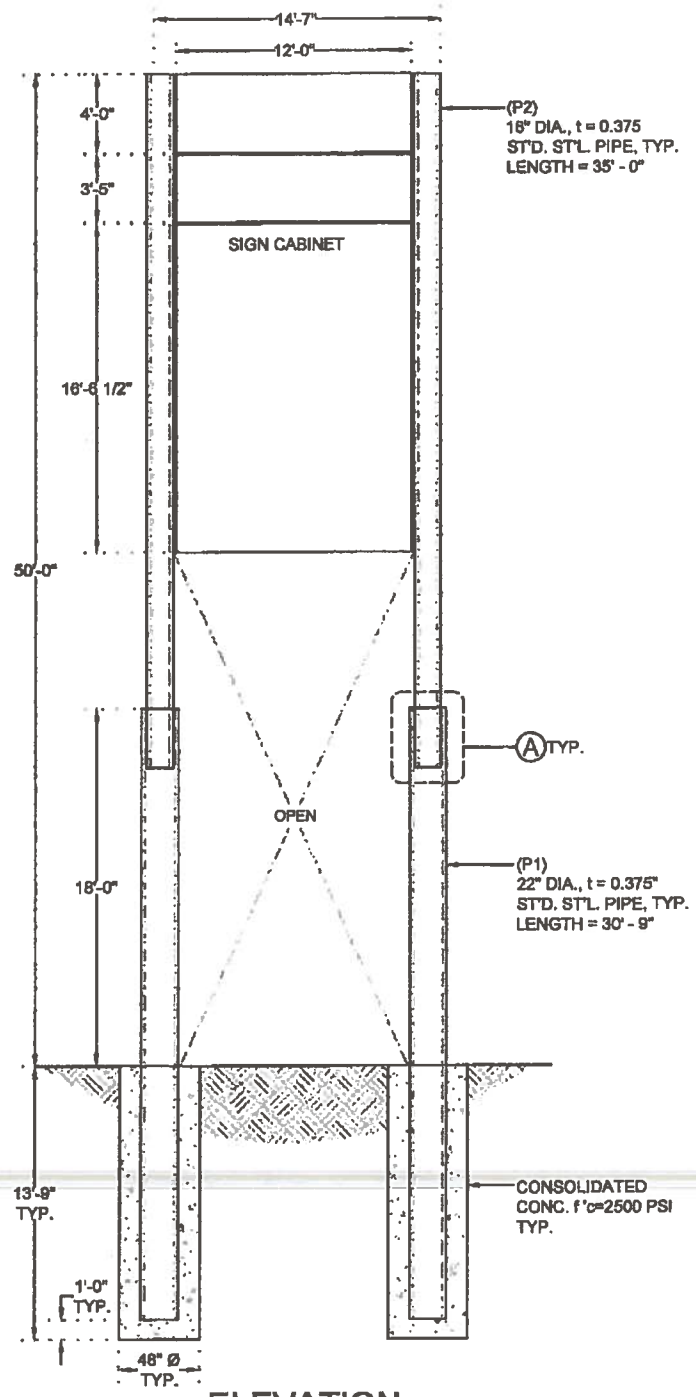

ELEVATION

N.T.S.

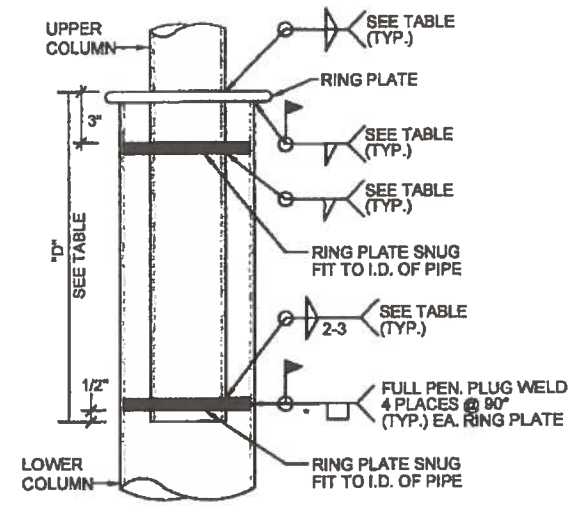

UPPER COL. DIA.	"D"	WELD SIZE	RING PL.
16" Ø	36"	1/4"	1/2"

* LENGTH OF PLUG WELDS TO BE 1/8 OF LOWER COLUMN DIA., MINIMUM 1/2"
* SPECIAL INSPECTION REQUIRED FOR FIELD WELD

Ⓐ STEP DOWN

N.T.S.

Sign Design Based on 2015 IBC

Job #	JTS_74218				
Project	Norwood Assn - Pylon A				
Job Location	1030 Norwood Park Blvd.				
	Austin, TX				

INPUT DATA

Exposure category (B, C or D)		=	C	
Risk Category		=	II	
Basic wind speed (3 sec. gust wind)	V	=	115	mph
Topographic factor	K_{zt}	=	1	Flat
Height of the sign	h	=	50	ft
Vertical dimension (for wall, s = h)	s	=	29.86	ft
Horizontal dimension	B	=	14.25	ft
Dimension of return corner	L_r	=	1	ft

ANALYSIS

Velocity pressure

$q_h = 0.00256\ K_h K_{zt} K_d V^2$ = 31.37 psf

where:

q_h = velocity pressure at height h. (Eq. 29.3-1, page 307)

K_h = velocity pressure exposure coefficient = 1.09

evaluated at height above ground level, h (Tab. 29.3-1, pg 310)

K_d = wind directionality factor. (Tab. 26.6-1, page 250) = 0.85

Wind Force Case A: resultant force though the geometric center (Sec. 29.4.1 & Fig. 29.4-1)

Max horizontal wind pressure = $p = q_h G C_f$ = 46.11 psf

where: G = gust effect factor. (Sec. 26.9, page 254). = 0.85

C_f = net force coefficient. (Fig. 29.4-1, page 308) 1.73

A_s = B s = the gross area = 425.5 ft^2

Estimated sign weight = 4255 Lbs

Footing Design *(See attached Enercalc calcs)*

Unfactored Windforce, F = 46.11 x As = 19.62 kips

Unfactored Moment = F x moment arm = 644.7 kip-ft

48 in. Dia. Depth = 13' -9"

DESIGN SUMMARY

Allowable Stress Design Wind Factor = 0.6

Design Wind Pressure = 0.6 x p = 27.67 psf

Design Windforce, F = 27.67 x As = 11.77 kips

Moment Arm = 32.86 ft

Design Moment = F x moment arm = 386.8 kip-ft

Pole (P1) Design St'd. Steel Pipe

Sec. Mod. Req'd. USE A53 Grade B

S = 110.52 22" Dia., t=0.375 S=126.40

Pole (P2) Design St'd. Steel Pipe

Sec. Mod. Req'd. USE A53 Grade B

S = 54.67 16" Dia., t=0.375 S=65.67

STATE OF TEXAS
TONY JACOB
117533
LICENSED
PROFESSIONAL ENGINEER
APR 1 3 2018

Y.J. Inc.
F-19272

NOTES :

GENERAL :

- SIGN DESIGN IS BASED ON ADEQUATE EXISTING SUPPORT ELEMENTS.
- PROVIDE ISOLATION OF DISSIMILAR MATERIALS.
- COAT ALUMINUM IN CONTACT WITH CONCRETE WITH ZINC RICH PAINT.
- THERE IS NO PROTECTION ZONE AS DEFINED IN AISC 341-10.
- PROVIDE FULLY WELDED END CAPS AT EXPOSED OPEN ENDS OF STEEL / ALUM. TUBES, MATCH THICKNESS LIKE FOR LIKE.
- CABINETS SHALL BE CONSTRUCTED OF NONCOMBUSTIBLE MATERIALS
- SLOPE TOP OF EXPOSED FOOTING AWAY FROM DIRECT BURIAL POSTS

ANCHORS :

- BRAND NAME APPROVED POST INSTALLED ANCHORS SPECIFIED ON PLANS MAY BE SUBSTITUTED BY APPROVED EQUAL.

STEEL :

DESIGN AND FABRICATION ACCORDING TO 2015 IBC

- PLATE, ANGLE, CHANNEL TEE, AND WIDE FLANGE: ASTM A36
- ROUND PIPE: ASTM A53 GRADE B OR EQUIVALENT.
- HSS ROUND, SQUARE, AND RECTANGULAR TUBE: ASTM A500 GRADE B OR EQUIVALENT
- ALL ANCHORS BOLTS SHOULD BE: ASTM F1554
- ALL STEEL MACHINED BOLTS SHOULD BE: ASTM A307
- ALL STAINLESS STEEL MACHINED BOLTS SHOULD BE: ASTM F593
- ZINC COATED (HOT DIPPED) PER: ASTM A153 OR F2329
- BEARING TYPE CONNECTION REINFORCING REBAR: ASTM A615 GRADE 60 DEFORMED BARS

ALUMINUM :

DESIGN AND FABRICATION ACCORDING TO 2015 ALUM. DESIGN MANUAL

- PLATES, ANGLES, CHANNELS, TEE, AND SQUARE TUBING: ALUMINUM ALLOY 6061 - T6 WITH 0.098 LBS PER CUBIC INCH.

WELDING :

STEEL

DESIGN AND FABRICATION ACCORDING TO AWS D1.1.

- AWS CERTIFICATION REQUIRED FOR ALL STRUCTURAL WELDERS.
- WELDING PER AISC 341-10
- E70 XX ELECTRODE FOR SMAW PROCESS.
- E70S XX ELECTRODE FOR GMAW PROCESS.
- ER7 XX ELECTRODE FOR GTAW PROCESS.
- E70T XX ELECTRODE FOR FCAW PROCESS.

ALL WELDS SHALL BE MADE WITH A FILLER METAL THAT CAN PRODUCE WELDS THAT HAVE A MINIMUM CHARPY V-NOTCH TOUGHNESS OF 20FT-LB AT ZERO 0° AS DETERMINED BY THE APPROPRIATE AWS A5 CLASSIFICATION TEST METHOD OR MFG'S. CERTIFICATION.

ALUMINUM

ALL WELDING IN ACCORDANCE WITH THE LATEST EDITION OF THE AWS A.5.10. FILLER ALLOYS PER TABLES M.9.1 & M.9.2 OF 2015 ALUMINUM DESIGN MANUAL.

CONCRETE :

DESIGN AND CONSTRUCTION ACCORDING TO ACI 318-14

- COMPRESSIVE STRENGTH AT 28 DAYS, f'c=2500 PSI MINIMUM.
- CEMENT TYPE II OR IV. W/C RATIO 0.45 BY WEIGHT FOR PIER AND CAISSON FOOTINGS
- CONCRETE MUST BE POURED AGAINST UNDISTURBED EARTH.
- MAINTAIN A MINIMUM 3" CONCRETE COVER OVER ALL EMBEDDED STEEL.

SOIL:

LATERAL SOIL BEARING PER IBC CLASS 5 TABLE 1806.2 (100 PSF/FT).

www.yjinc.com
P.O. BOX 802050
SANTA CLARITA, CA. 91380
TEL. (661)259-0700 FAX. (661)259-0900

SHEET TITLE:

NORWOOD ASSN PYLON A

DRN BY: A.W.	DATE LAST REVISED: Apr 18, 2018	REV. NO.	REV. DATE	REVISED BY
CHK BY: R.T.	PROJ. START DATE: Apr 17, 2018	1	-/-/-	--
REV BY: T.J.	SCALE: AS SHOWN	2	-/-/-	--
plotted by: yjinc on 4.18.2018 @ 2:00 PM		3	-/-/-	--

PROJECT JOB #: JTS_74218_Norwood Assn_Pylons_Norwood Park Blvd_Austin_TX.dwg

PROJECT LOCATION : NORWOOD ASSN
1030 NORWOOD PARK BLVD.
AUSTIN, TX

SHEET # 1 OF 1

C01/14

Printed: 18 APR 2018, 8:23AM

Pole Footing Embedded in Soil

File = Z:\YJSIGN~3\2018JT~1\74218_~1\JTS_74~1 EC6
ENERCALC, INC. 1983-2017, Build:10.17.8.29, Ver 10 17 8.29
Licensee : YJ INC.

Lic. # : KW-06009182

Description : Pylon A Concrete Footing

Code References

Calculations per IBC 2015 1807.3, CBC 2016, ASCE 7-10
Load Combinations Used : IBC 2015

General Information

Pole Footing Shape	Circular
Pole Footing Diameter	48.0 in
Calculate Min. Depth for Allowable Pressures	
No Lateral Restraint at Ground Surface	
Allow Passive	200.0 pcf
Max Passive	1,500.0 psf

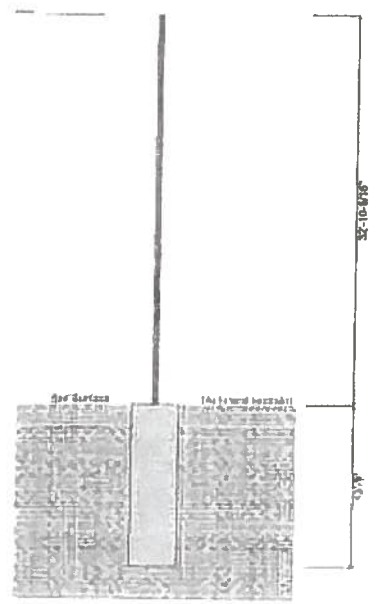

Controlling Values

Governing Load Combination : +D+0.60W

Lateral Load	5.886 k
Moment	193.414 k-ft
NO Ground Surface Restraint	
Pressures at 1/3 Depth	
Actual	910.90 psf
Allowable	911.90 psf
Minimum Required Depth	**13.750 ft**
Footing Base Area	12.566 ft^2
Maximum Soil Pressure	0.1016 ksf

Applied Loads

Lateral Concentrated Load (k)		Lateral Distributed Loads (klf)		Vertical Load (k)
D : Dead Load	k		k/ft	1.277 k
Lr : Roof Live	k		k/ft	k
L : Live	k		k/ft	k
S : Snow	k		k/ft	k
W : Wind	9.810 k		k/ft	k
E : Earthquake	k		k/ft	k
H : Lateral Earth	k		k/ft	k
Load distance above ground surface	32.860 ft	TOP of Load above ground surface	ft	
		BOTTOM of Load above ground surface	ft	

Load Combination Results

Load Combination	Forces @ Ground Surface Loads - (k)	Moments - (ft-k)	Required Depth - (ft)	Pressure at 1/3 Depth Actual - (psf)	Allow - (psf)	Soil Increase Factor
D Only	0.000	0.000	0.13	0.0	0.0	1.000
+D+0.60W	5.886	193.414	13.75	910.9	911.9	1.000
+D-0.60W	5.886	193.414	13.75	910.9	911.9	1.000
+D+0.450W	4.415	145.060	12.38	820.4	820.6	1.000
+D-0.450W	4.415	145.060	12.38	820.4	820.6	1.000
+0.60D+0.60W	5.886	193.414	13.75	910.9	911.9	1.000
+0.60D-0.60W	5.886	193.414	13.75	910.9	911.9	1.000
+0.60D	0.000	0.000	0.13	0.0	0.0	1.000

C01/15

Printed: 18 APR 2018, 8:24AM

Pole Footing Embedded in Soil

File = Z:\YJSIGN~3\2018JT~1\74218_~1\JTS_74~1 EC6
ENERCALC, INC. 1983-2017, Build:10.17.8.29, Ver.10.17.8.29

Lic. # : KW-06009182 Licensee : YJ INC.

Description : Pylon B Concrete Footing

Code References

Calculations per IBC 2015 1807.3, CBC 2016, ASCE 7-10
Load Combinations Used : IBC 2015

General Information

Pole Footing Shape	Circular
Pole Footing Diameter	30.0 in
Calculate Min. Depth for Allowable Pressures	
No Lateral Restraint at Ground Surface	
Allow Passive	200.0 pcf
Max Passive	1,500.0 psf

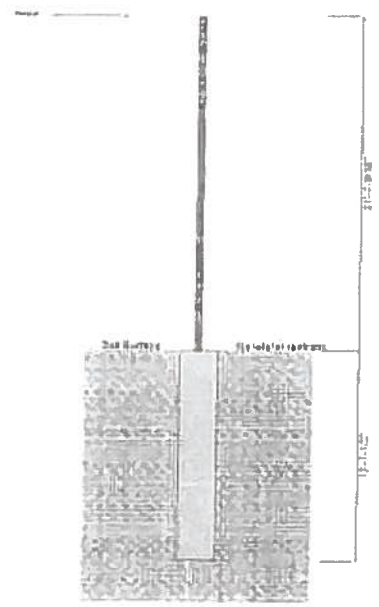

Controlling Values

Governing Load Combination : +D+0.60W

Lateral Load	4.806 k
Moment	103.954 k-ft
NO Ground Surface Restraint	
Pressures at 1/3 Depth	
Actual	905.66 psf
Allowable	905.76 psf
Minimum Required Depth	**13.625 ft**
Footing Base Area	4.909 ft^2
Maximum Soil Pressure	0.2375 ksf

Applied Loads

Lateral Concentrated Load (k)		Lateral Distributed Loads (klf)		Vertical Load (k)
D : Dead Load	k		k/ft	1.166 k
Lr : Roof Live	k		k/ft	k
L : Live	k		k/ft	k
S : Snow	k		k/ft	k
W : Wind	8.010 k		k/ft	k
E : Earthquake	k		k/ft	k
H : Lateral Earth	k		k/ft	k
Load distance above ground surface	21.630 ft	TOP of Load above ground surface	ft	
		BOTTOM of Load above ground surface	ft	

Load Combination Results

Load Combination	Forces @ Ground Surface Loads - (k)	Moments - (ft-k)	Required Depth - (ft)	Pressure at 1/3 Depth Actual - (psf)	Allow - (psf)	Soil Increase Factor
D Only	0.000	0.000	0.13	0.0	0.0	1.000
+D+0.60W	4.806	103.954	13.63	905.7	905.8	1.000
+D-0.60W	4.806	103.954	13.63	905.7	905.8	1.000
+D+0.450W	3.605	77.965	12.25	812.2	812.6	1.000
+D-0.450W	3.605	77.965	12.25	812.2	812.6	1.000
+0.60D+0.60W	4.806	103.954	13.63	905.7	905.8	1.000
+0.60D-0.60W	4.806	103.954	13.63	905.7	905.8	1.000
+0.60D	0.000	0.000	0.13	0.0	0.0	1.000