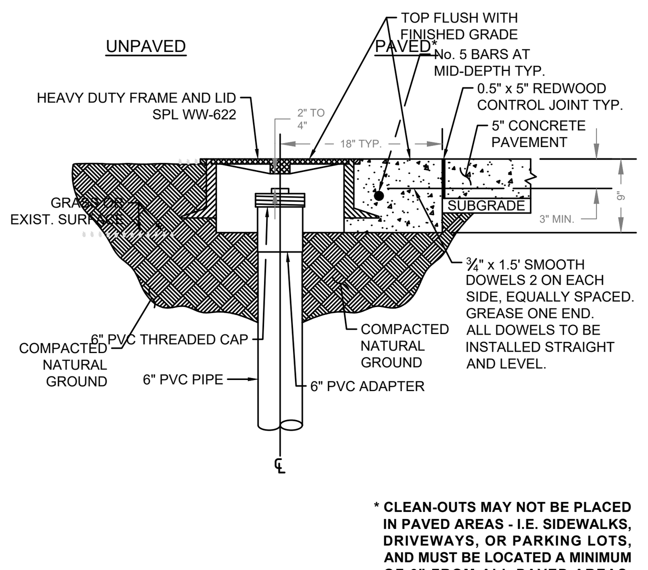

*** CLEAN-OUTS MAY NOT BE PLACED IN PAVED AREAS - I.E. SIDEWALKS, DRIVEWAYS, OR PARKING LOTS, AND MUST BE LOCATED A MINIMUM OF 6" FROM ALL PAVED AREAS.**

NOTES:

1. SUB-GRADE SHALL BE COMPACTED AS PER STD. SPEC. 201S, SUB-GRADE PREPARATION.
2. REINFORCING STEEL SHALL MEET ITEM 406S, REINFORCING STEEL.
3. CONCRETE SHALL MEET ITEM 403S CLASS "A".
4. ALL PVC SHALL BE SDR 26.

CLEAN-OUT FRAME AND LID

CITY OF AUSTIN AUSTIN WATER	WASTEWATER CLEAN-OUT FRAME AND LID	
RECORD COPY SIGNED BY KATHI L FLOWERS 05/18/2016 DATE	THE ARCHITECT/ENGINEER ASSUMES RESPONSIBILITY FOR APPROPRIATE USE OF THIS STANDARD.	STANDARD NO. 520-AW-03 1 OF 2

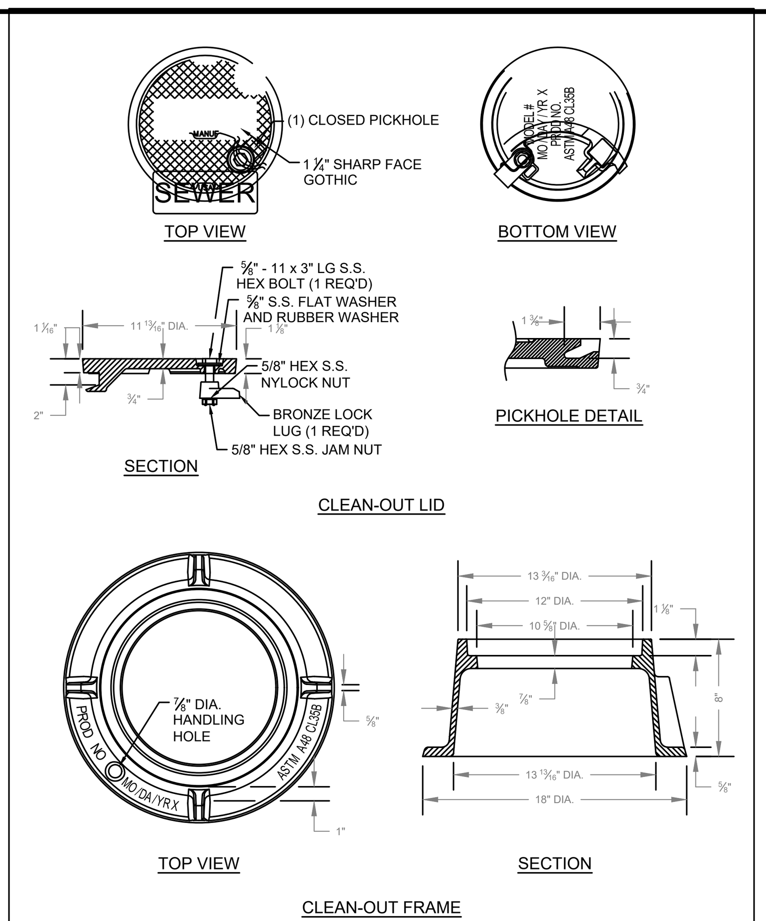

CITY OF AUSTIN AUSTIN WATER	WASTEWATER CLEAN-OUT FRAME AND LID	
RECORD COPY SIGNED BY KATHI L FLOWERS 05/18/2016 DATE	THE ARCHITECT/ENGINEER ASSUMES RESPONSIBILITY FOR APPROPRIATE USE OF THIS STANDARD.	STANDARD NO. 520-AW-03 2 OF 2

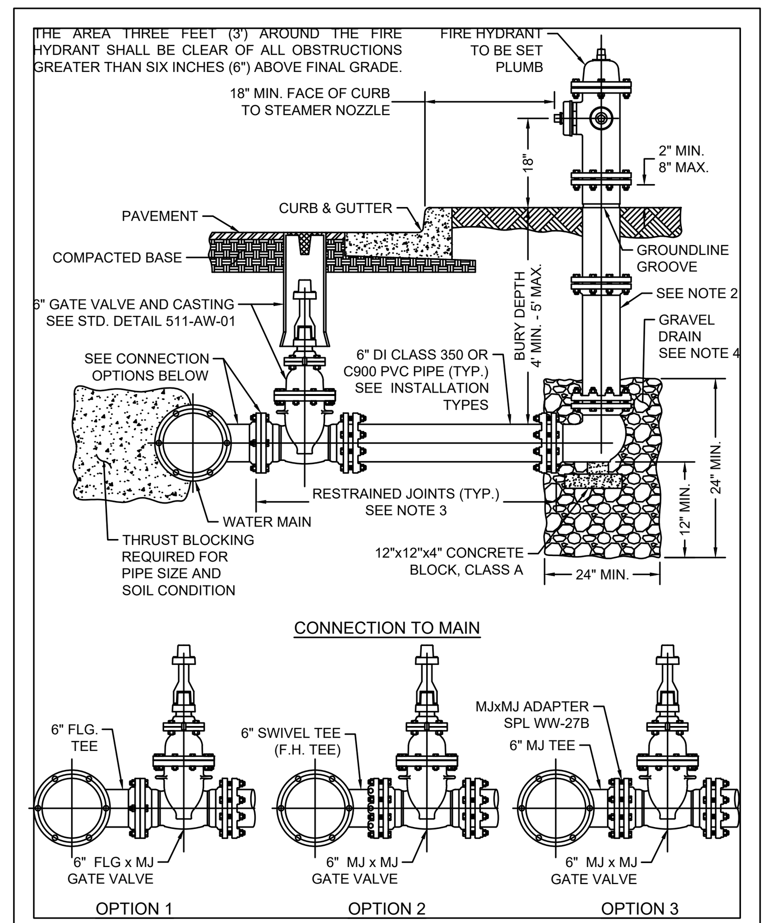

CITY OF AUSTIN AUSTIN WATER	FIRE HYDRANT	
RECORD COPY SIGNED BY KATHI L FLOWERS 05/18/2016 ADOPTED	THE ARCHITECT/ENGINEER ASSUMES RESPONSIBILITY FOR APPROPRIATE USE OF THIS STANDARD.	STANDARD NO. 511-AW-02 1 OF 3

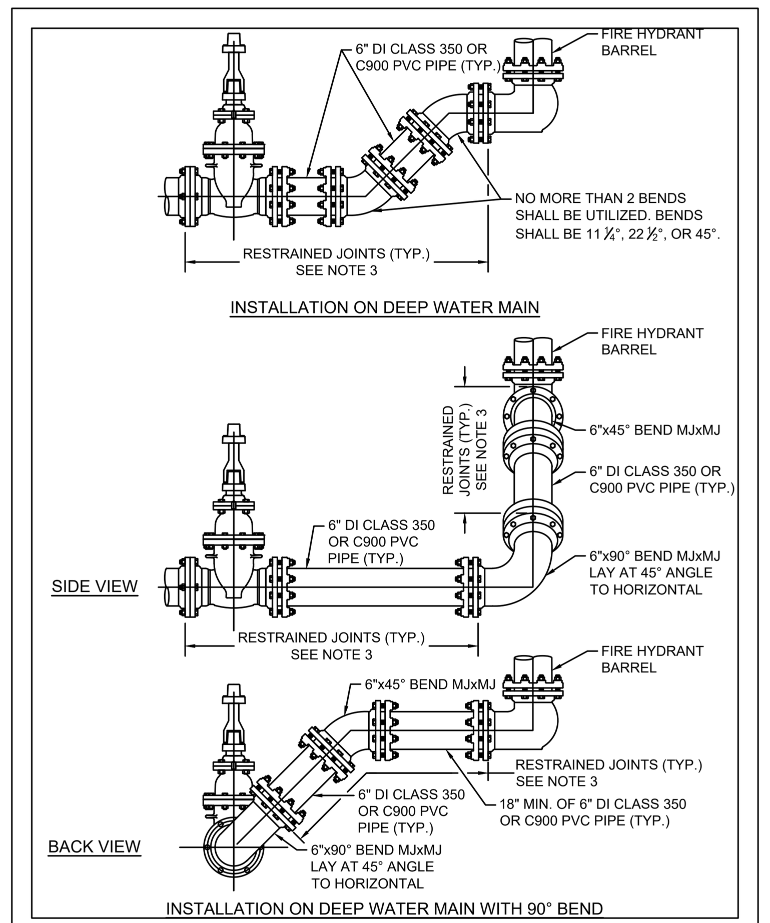

CITY OF AUSTIN AUSTIN WATER	FIRE HYDRANT	
RECORD COPY SIGNED BY KATHI L FLOWERS 05/18/2016 ADOPTED	THE ARCHITECT/ENGINEER ASSUMES RESPONSIBILITY FOR APPROPRIATE USE OF THIS STANDARD.	STANDARD NO. 511-AW-02 2 OF 3

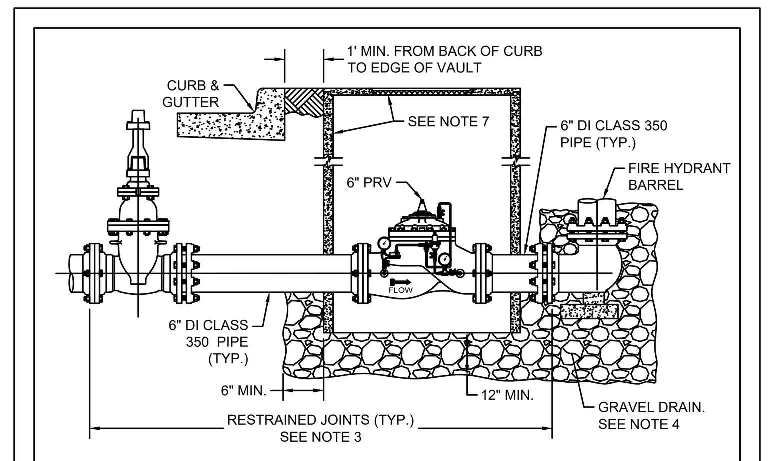

INSTALLATION ON WATER MAIN WITH PRESSURE REDUCING VALVE (PRV)

NOTES: APPLICABLE TO ALL INSTALLATION TYPES.

1. NO PART OF A HYDRANT OR ITS NOZZLE CAPS SHALL BE WITHIN 6" OF ANY SIDEWALK OR PEDESTRIAN RAMP. ANY FIRE HYDRANT PLACED NEAR A STREET CORNER SHALL BE LOCATED OUTSIDE THE CURVE RADIUS AND A MINIMUM OF 4' FROM RAMPS.
2. ONE BARREL EXTENSION NOT EXCEEDING 2' LENGTH MAY BE INSTALLED DIRECTLY BELOW THE FIRE HYDRANT IN ORDER TO MEET THE REQUIRED BURY DEPTH OF 4' - 5'. BREAK AWAY BOLTS (SHOE TYPES) SHALL BE PROPERLY SPACED AND PLACED.
3. FIRE LINE SHALL HAVE ALL JOINTS RESTRAINED FROM MAIN TO FIRE HYDRANT. JOINTS SHOWN MAY VARY. SEE SPL WW-27, WW-27A, AND WW-27B FOR RESTRAINT OPTIONS.
4. BELOW EACH HYDRANT, A DRAINAGE PIT 24" IN DIAMETER AND 12" DEEP SHALL BE EXCAVATED AND FILLED WITH COMPACTED COARSE GRAVEL OR BROKEN STONE MIXED WITH COARSE SAND UNDER AND AROUND THE BOWL OF THE HYDRANT, AND TO A LEVEL 12" ABOVE THE HYDRANT DRAIN OPENING (SEE STD. SPEC. 510). THE HYDRANT DRAINAGE PIT SHALL NOT BE CONNECTED TO A SANITARY SEWER. THE DRAIN GRAVEL SHALL BE COVERED WITH FILTER FABRIC PER STD. SPEC. 620S. FOR PRV, GRAVEL SHALL EXTEND UNDER THE PRV VAULT 12" MIN. DEPTH UNDER THE VAULT AND 6" MIN. BEYOND VAULT.
5. FOR FIRE HYDRANT LEADS AT A MAIN OUTLET LARGER THAN 6" DIAMETER, OUTLET SHALL BE FLANGED AND A FLG x FLG REDUCER SHALL BE INSTALLED DIRECTLY ON THE OUTLET.
6. WRAP 8 MIL. POLY-FILM WRAP ON ALL BURIED PIPE AND FITTINGS.
7. FOR HYDRANTS WITH PRV: CLASS III RCP VAULT 60" MIN. I.D. WITH REINFORCED PRECAST CONCRETE LID (AASHTO H-20 LOADING) WITH COA FRAME AND 32" COVER WITH LETTERING MODIFIED FOR WATER.

CITY OF AUSTIN AUSTIN WATER	FIRE HYDRANT	
RECORD COPY SIGNED BY KATHI L FLOWERS 05/18/2016 ADOPTED	THE ARCHITECT/ENGINEER ASSUMES RESPONSIBILITY FOR APPROPRIATE USE OF THIS STANDARD.	STANDARD NO. 511-AW-02 3 OF 3

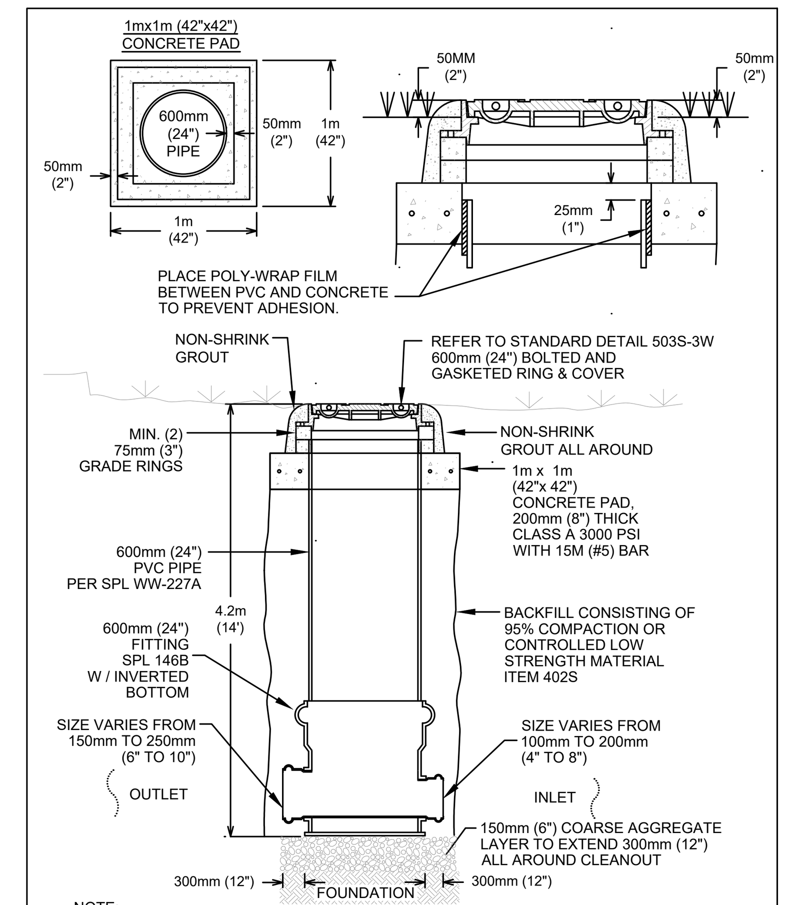

NOTE:
1. CLEAN OUT FOUNDATION SHALL MEET OR EXCEED STD, SPEC 506.5B.

CITY OF AUSTIN AUSTIN WATER UTILITY	LARGE DIAMETER CLEANOUT	
RECORD COPY SIGNED BY KATHI L FLOWERS 08/31/2011	THE ARCHITECT/ENGINEER ASSUMES RESPONSIBILITY FOR APPROPRIATE USE OF THIS STANDARD.	STANDARD NO. 506S-14

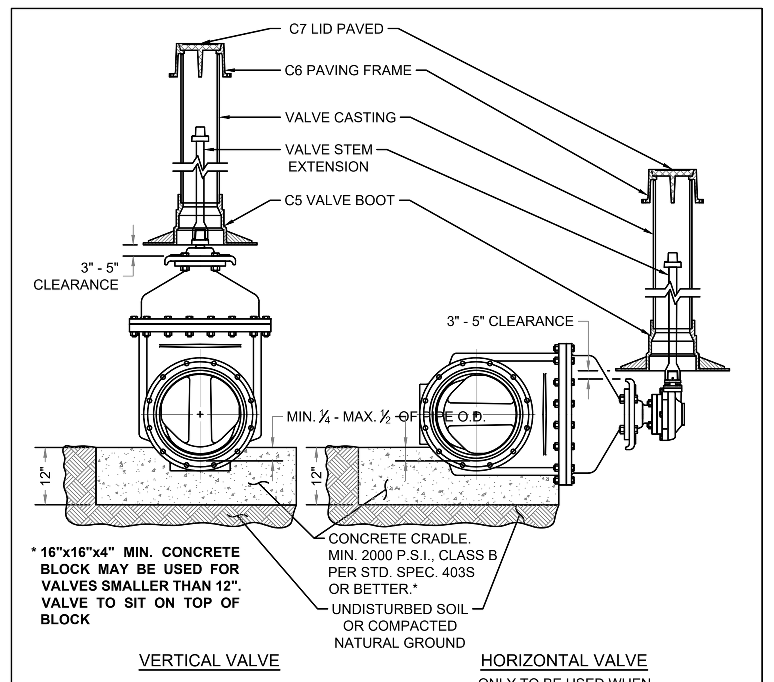

NOTES:

1. WELD SOCKET 2½" x 2" DEEP TO 1" SCH. 40 CARBON STEEL ROUND STEM EXTENSION, FITTED ON OPERATING NUT, [SCH. 80 FOR LENGTHS OVER 10'.]
2. VALVE CASTING SHALL BE 6" DI PIPE WITH BELL OR COLLAR CENTERED OVER VALVE BOOT.
3. NUT AT TOP OF VALVE EXTENSION ROD SHALL BE SQUARE 2" LONG WELDED TO TOP OF ROD.
4. VALVE STEM EXTENSIONS ARE REQUIRED ON ALL VALVES THAT EXCEED 3' DEEP FROM FINISHED GRADE. VALVE EXTENSIONS SHALL BE PLACED SUCH THAT THE EXTENSION NUT IS BETWEEN 12" AND 18" FROM FINISHED GRADE.

RECLAIMED WATER: ALL RECLAIMED PVC PIPE SHALL BE MANUFACTURED PURPLE PIPE. HDPE PIPE SHALL BE MANUFACTURED WITH PURPLE STRIPES. ALL OTHER PIPE AND APPURTENANCES SHALL BE MANUFACTURED PURPLE IF AVAILABLE. ALL PIPE AND FITTINGS THAT ARE NOT AVAILABLE FROM THE MANUFACTURER IN PURPLE SHALL BE PAINTED PURPLE PER SPL WW-3C. ALL BURIED DI AND CI PIPE AND FITTINGS SHALL ALSO BE WRAPPED IN PURPLE POLYETHYLENE PER SPL WW-27D. ALL COVERS SHALL HAVE **"RECLAIMED WATER"** CAST INTO THEM.

CITY OF AUSTIN AUSTIN WATER	TYPICAL GATE VALVE 4" - 16"	
RECORD COPY SIGNED BY KATHI L FLOWERS 05/18/2016 ADOPTED	THE ARCHITECT/ENGINEER ASSUMES RESPONSIBILITY FOR APPROPRIATE USE OF THIS STANDARD.	STANDARD NO. 511-AW-01 1 OF 4

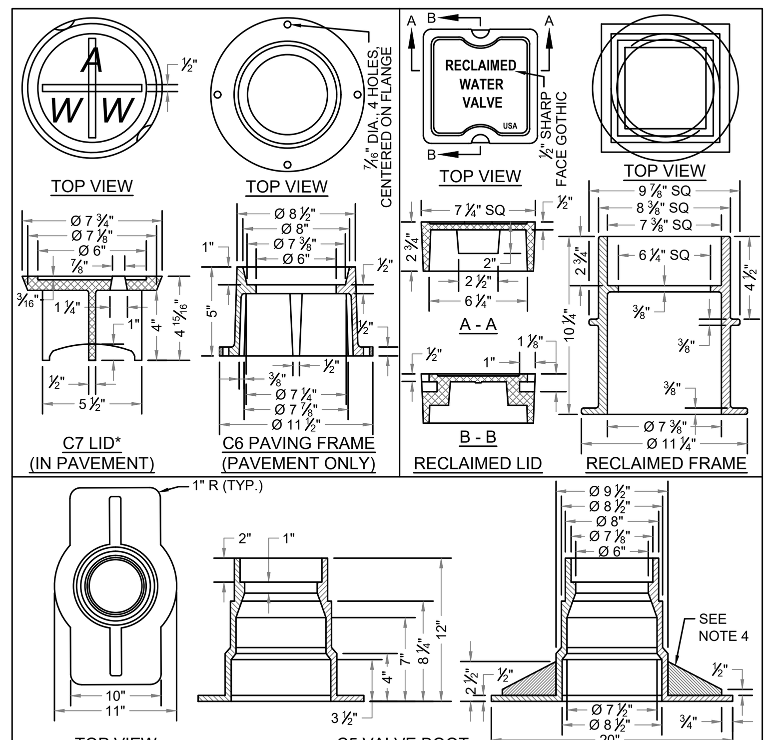

NOTES:

1. MATERIAL SHALL BE GRAY CAST IRON, ASTM A48, GRADE 30B.
2. THE MANUFACTURER'S IDENTIFICATION AND CASTING NUMBER, AND THE COUNTRY WHERE CAST, SHALL BE DISTINCTLY CAST ONTO EACH LID, FRAME, COLLAR AND BASE.
3. DRAFT AND SHRINKAGE ALLOWANCE SHALL BE IN ACCORDANCE WITH NORMAL FOUNDRY PRACTICE.
4. CASTING FINISH BY MANUFACTURER SHALL INCLUDE REMOVAL OF FINS AND FLASHING, AND PAINT WITH BLACK ASPHALT COATING.

WEIGHTS:

C7 LID: 13 LBS
RECLAIMED LID: 15 LBS
C6 FRAME: 23 LBS
RECLAIMED FRAME: 33 LBS
C5 BASE: 78 LBS

* LETTERING SHALL BE 1½"
2 PICK BAR SLOTS REQUIRED

CITY OF AUSTIN AUSTIN WATER	TYPICAL GATE VALVE 4" - 16"	
RECORD COPY SIGNED BY KATHI L FLOWERS 05/18/2016 ADOPTED	THE ARCHITECT/ENGINEER ASSUMES RESPONSIBILITY FOR APPROPRIATE USE OF THIS STANDARD.	STANDARD NO. 511-AW-01 2 OF 4

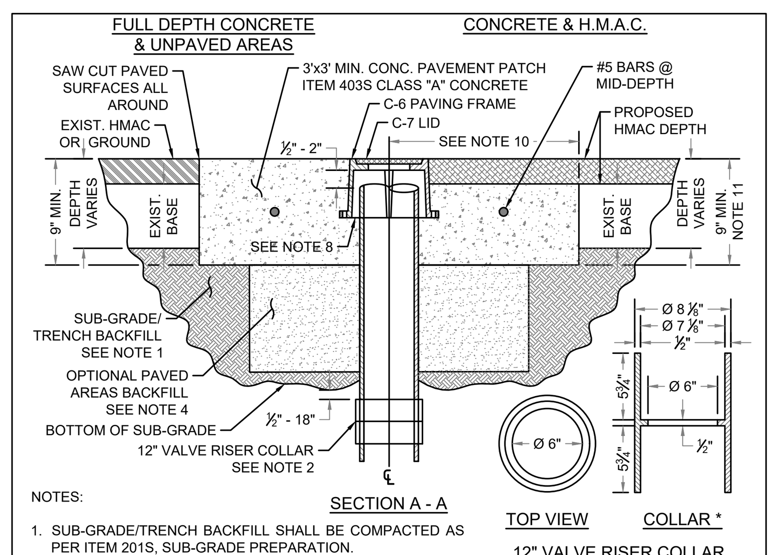

NOTES:

1. SUB-GRADE/TRENCH BACKFILL SHALL BE COMPACTED AS PER ITEM 201S, SUB-GRADE PREPARATION.
2. TO ADJUST VALVE CASTINGS TO FINAL GRADE, REMOVE RISER PIPE BELOW SUB-GRADE AND INSTALL APPROPRIATE LENGTH OF NEW RISER PIPE TO ACHIEVE FINAL GRADE. CONNECT THE TWO PIECES OF RISER PIPE WITH A 6" COLLAR MIN. 12" LENGTH APPROXIMATELY CENTERED ON THE JOINT WITH THE TOP OF SLEEVE LOCATED ½" - 18" BELOW SUB-GRADE. THE INSIDE "LIP" OF COLLAR TO BE PAINTED WITH FLUORESCENT WHITE PAINT OR COVERED WITH FLUORESCENT WHITE TAPE. ALTERNATE: FOR OPTIONAL SINGLE PIECE RISER INSTALLATION SEE SHEET 4 OF 4.
3. CLEAN VALVE BOX OF ALL DEBRIS DOWN TO THE NUT OF THE VALVE; NUT SHALL OPERATE WITH NO OBSTRUCTION.
4. WHERE CASTINGS TO BE REMOVED REQUIRE EXCAVATION GREATER THAN 20" DEEP, CONTRACTOR MAY ELECT TO FILL EXCAVATION WITH CONTROLLED LOW STRENGTH MATERIAL (SPEC. ITEM 402S) TO THE UNDERSIDE OF THE CONCRETE. PAVEMENT PATCH IN LIEU OF COMPACTED BACKFILL.
5. REINFORCING STEEL SHALL MEET SPEC. ITEM 406S.7.
6. NO MORE THAN 2 SECTIONS OF PIPE SHALL BE USED FROM VALVE TO FINAL GRADE.
7. BELL AND SPIGOT IS ACCEPTABLE FOR DEPTH OVER 18'.

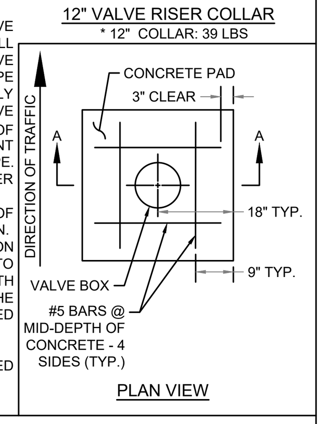

CITY OF AUSTIN AUSTIN WATER	TYPICAL GATE VALVE 4" - 16"	
RECORD COPY SIGNED BY KATHI L FLOWERS 05/18/2016 ADOPTED	THE ARCHITECT/ENGINEER ASSUMES RESPONSIBILITY FOR APPROPRIATE USE OF THIS STANDARD.	STANDARD NO. 511-AW-01 3 OF 4

NOTES (CON'T):

8. PAVING FRAME SHALL BE FLUSH WITH THE CONC. PAD AND PLACED ½" - 2" ABOVE RISER PIPE (FRAME SHALL NOT REST ON RISER.)
9. IN UNPAVED AREAS, INSTALL ONE DELINEATOR STAKE IMMEDIATELY ADJACENT TO THE EDGE OF THE CONCRETE PAD. DELINEATOR SHALL BE BLUE FOR POTABLE WATER AND PURPLE FOR RECLAIMED WATER AND SHALL EXTEND AT LEAST 60" ABOVE GROUND. DELINEATORS SHALL HAVE 2" WIDE, WHITE IN COLOR, TYPE I REFLECTIVE TAPE MOUNTED DIAGONALLY AT 12" SPACING ON BOTH SIDES.
10. VALVE SHALL TYPICALLY BE CENTERED IN CONCRETE DIAMOND BUT MAY BE OFFSET WITH A MIN. OF 12" FROM CENTER OF VALVE LID TO EDGE OF CONCRETE IN ALL DIRECTIONS.
11. MIN. TOTAL DEPTH OF ASPHALT PLUS CONC. IS 9" AND MIN. DEPTH OF CONC. PAD SHALL BE 5"

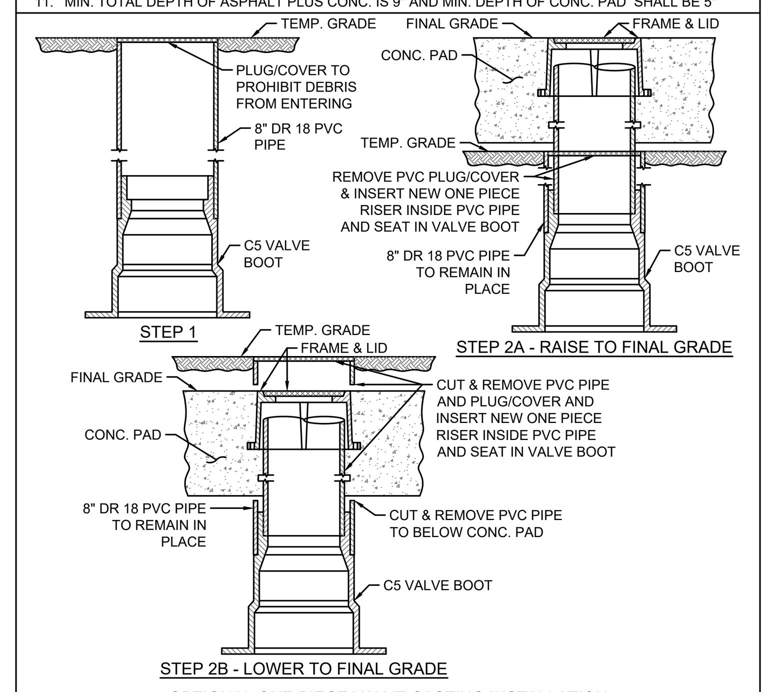

OPTIONAL ONE PIECE VALVE CASTING INSTALLATION

CITY OF AUSTIN AUSTIN WATER	TYPICAL GATE VALVE 4" - 16"	
RECORD COPY SIGNED BY KATHI L FLOWERS 05/18/2016 ADOPTED	THE ARCHITECT/ENGINEER ASSUMES RESPONSIBILITY FOR APPROPRIATE USE OF THIS STANDARD.	STANDARD NO. 511-AW-01 4 OF 4

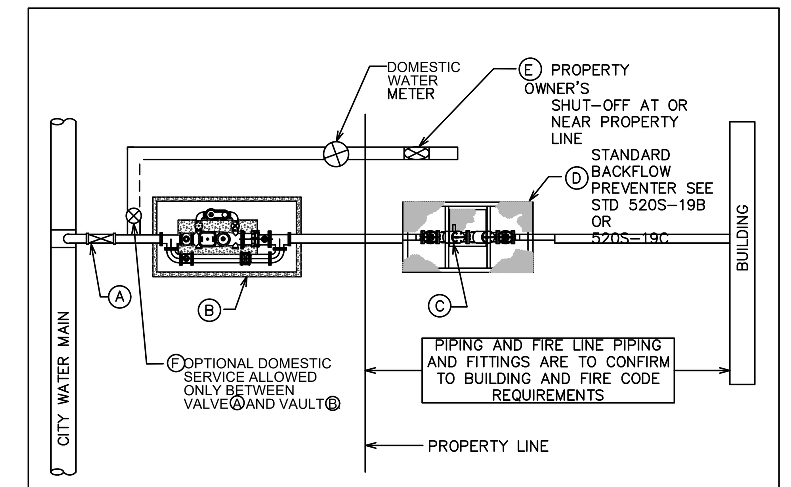

MATERIALS:

Ⓐ TAPPING, RESTRAINED OR FLANGED VALVE (GATE, IRON BODY WITH MJ OUTLET). SEE SPL WW-243, WW-27, WW-27A, AND/OR WW-27B.
Ⓑ FIRELINE OR MASTER METER, SEE STD. DETAIL 520S-17.
Ⓒ CUSTOMER'S BACKFLOW PREVENTION ASSEMBLY AS REQUIRED BY CROSS CONNECTION ORDINANCES. SEE SPL WW-293 OR APPROVEL EQUAL.
Ⓓ VAULT AND ACCESS DOOR SHALL BE PER SPL WW-298 OR SPL WW-614, RESPECTIVELY, OR APPROVED EQUAL. SEE STD. DETAIL 520S-19B OR 19C. VAULT SHALL NOT BE LOCATED IN A TRAFFIC AREA.
Ⓔ CUSTOMER'S SHUT-OFF VALVE ON DOMESTIC WATER LINE.
Ⓕ DOMESTIC WATER SERVICE LINE VALVE.

NOTES:

1. FIRE LINE SHALL BE A MINIMUM OF 150 mm (6") & GREATER THAN OR EQUAL TO METER SIZE IN THE STREET RIGHT-OF-WAY. PLANS SHALL BE PREPARED BY A LICENSED ENGINEER.
2. ALL BURIED PIPE SHALL BE WRAPPED COMPLETELY WITH A MINIMUM OF 0.2 mm (8 MIL) POLYETHYLENE FILM.
3. PIPING AND TUBING IN STREET RIGHT-OF-WAY SHALL BE BEDDED IN GRANULAR MATERIALS AS REQUIRED BY SECTION 510.3 (14) OF THE CITY OF AUSTIN STANDARD SPECIFICATIONS: BACKFILL ABOVE GRANULAR BEDDING AS REQUIRED BY SECTION 510.3 (25).
4. FOR STD. DETAILS 520S-19A, 19B, AND 19C, MASTER METER MEANS METER FOR FIRE AND DOMESTIC SERVICE.
5. THE TOP OF THE METER VAULT SHALL BE AT AN ELEVATION SUCH THAT THE SURROUNDING GROUND SLOPES AWAY FROM THE VAULT. ADDITIONAL DRAINAGE CONSIDERATION SUCH AS CONNECTION OF VAULT TO STORM SEWER, LATERAL DRAIN LINES FROM GRAVEL BED OR OTHER MEANS SHALL BE REQUIRED IF CONDITIONS CAUSE WATER TO COLLECT IN VAULT.

CITY OF AUSTIN AUSTIN WATER UTILITY	STANDARD FIRE LINE INSTALLATION WITH OR WITHOUT MASTER METER	
RECORD COPY SIGNED BY KATHI L FLOWERS 08/31/2011	THE ARCHITECT/ENGINEER ASSUMES RESPONSIBILITY FOR APPROPRIATE USE OF THIS STANDARD.	STANDARD NO. 520S-19A

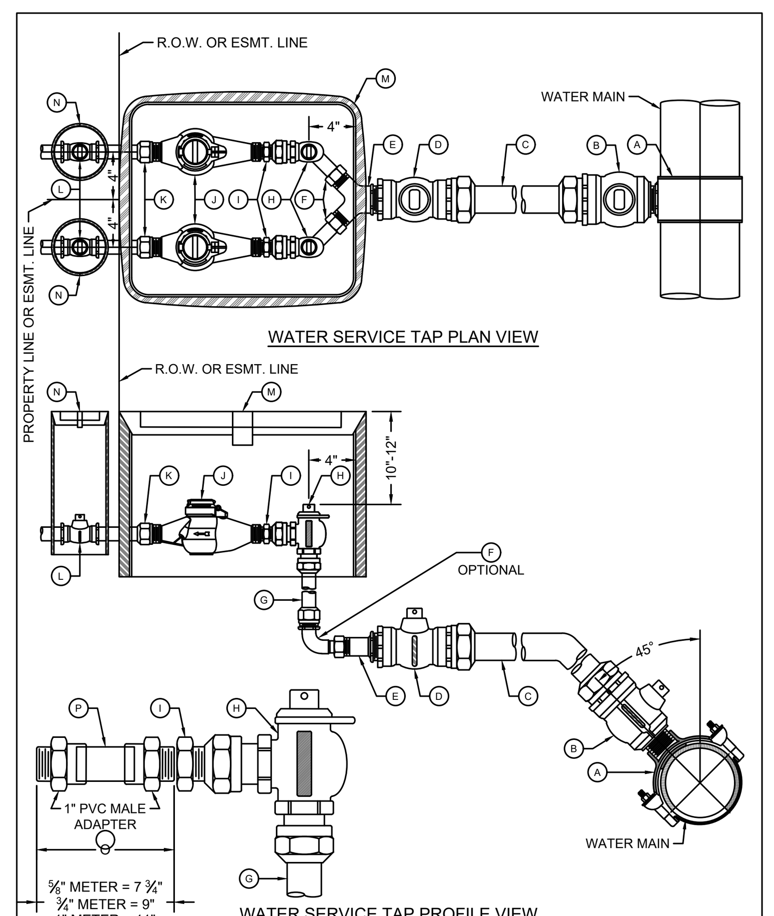

CITY OF AUSTIN AUSTIN WATER	WATER SERVICE & METER INSTALLATION - 1" & SMALLER METERS	
RECORD COPY SIGNED JEFF A. KYLE 11/07/2018 ADOPTED	THE ARCHITECT/ENGINEER ASSUMES RESPONSIBILITY FOR APPROPRIATE USE OF THIS STANDARD.	STANDARD NO. 520-AW-01B 1 OF 2

MATERIALS LIST:

A. 2" SERVICE CLAMP, SPL WW-264
B. 2" CORPORATION STOP, SPL WW-68
C. 2" HDPE WATER SERVICE TUBING, SPL WW-65
D. 2" BALL VALVE, SPL WW-68
E. COPPER FLARE SINGLE SERVICE FITTING, SPL WW-68
COPPER FLARE DOUBLE SERVICE WYE, SPL WW-68
F. 1" SWIVEL NUT x 1" COMPRESSION 90° BEND, SPL WW-68 (OPTIONAL - NOT NEEDED IF MOUNTING BALL VALVE VERTICALLY UNDER ANGLE METER STOP)
G. 1" HDPE WATER SERVICE TUBING, SPL WW-65
H. ANGLE METER STOP, SPL WW-68

MATERIALS TO BE INSTALLED BY PLUMBER:

I. BRASS METER BUSHING - SIZE AS NEEDED TO CONNECT ANGLE STOP TO METER
J. WATER METER PURCHASED FROM AUSTIN WATER
K. BRASS WATER METER COUPLING MALE IPT x SWIVEL COUPLING NUT:
⅝" AND ¾" METERS: 8½" LONG x ¾" DIA.
1" METERS: 8½" LONG x 1" DIA.
L. PROPERTY OWNER'S CUT-OFF VALVE, SPL WW-276
M. METER BOX AND COVER, SPL WW-145A;
FOR DUAL 1" METERS: USE TWO SINGLE METER BOXES
N. PROPERTY OWNER'S VALVE BOX AND PO CUTOFF LID
O. TEMPORARY METER SPACER (REQUIRED TO ASSURE METER WILL FIT APPROPRIATELY)
P. 1" WOODEN DOWEL (SHOW ADDRESS ON DOWEL USING WATERPROOF MARKER)

NOTES:

1. SERVICE CLAMP SHALL BE WRAPPED COMPLETELY WITH 8 MIL. POLYETHYLENE FILM, SPL WW-27D.
2. BRANCH CONNECTIONS AND ALL ANGLE METER STOPS MUST BE INSTALLED PRIOR TO ANY METER INSTALLATION.
3. TOP OF METER BOXES SHOULD BE 4" ABOVE GROUND.
4. PIPING AND TUBING IN STREET RIGHT-OF-WAY SHALL BE BEDDED IN GRANULAR MATERIALS AS REQUIRED BY SECTION 510.3 (14) OF THE CITY OF AUSTIN STANDARD SPECIFICATIONS; BACKFILL ABOVE GRANULAR BEDDING AS REQUIRED BY SECTION 510.3 (25).
5. METER BOX MUST BE BEHIND CURB NEXT TO PROPERTY LINE OR EASEMENT AND OUT OF VEHICULAR TRAFFIC AREA AND SIDEWALK.
6. BALL VALVE "D" SHALL NOT BE LOCATED UNDER SIDEWALK, CURB, OR PAVEMENT, AND NOT BE LOCATED MORE THAN 36" BELOW FINAL GRADE.
7. METER SIZES TO BE SHOWN ON PLANS.
8. METER BOX CUT OUTS SHALL NOT EXCEED TWO TIMES THE PIPE DIAMETER.
9. INSTALL METALLIC WARNING TAPE, SPL WW-597, MINIMUM 1' ABOVE TUBING FROM SERVICE SADDLE TO BALL VALVE "D".
10. TUBING SHALL BE PLACED IN A STRAIGHT ALIGNMENT AND ALLOWED TO RELAX AND "SNAKE" LOOSELY IN THE TRENCH. TUBING BEHIND CURB AND GUTTER SHALL BE INSTALLED WITH A MINIMUM 2' DEPTH OF COVER.
11. 1" TUBING, WHEN BENT, SHALL HAVE A RADIUS NO SMALLER THAN 3'. 2" TUBING, WHEN BENT, SHALL HAVE A RADIUS NO SMALLER THAN 5'. BRASS FITTINGS SHALL NOT BE CONNECTED TO A BENT SECTION OF TUBING.
12. INSERT STIFFENERS FOR HDPE TUBING (PER SPL WW-65B) TO BE INSTALLED INSIDE TUBING AT ALL COMPRESSION FITTINGS.
13. FOR RECLAIMED WATER SERVICES AND METERS, ALL RECLAIMED TUBING SHALL BE MANUFACTURED SOLID PURPLE, SPL WW-65A. ALL APPURTENANCES SHALL BE MANUFACTURED PURPLE IF AVAILABLE. ALL FITTINGS THAT ARE NOT AVAILABLE FROM THE MANUFACTURER IN PURPLE SHALL BE PAINTED PURPLE PER SPL WW-3C. ALL METER BOX COVERS SHALL BE PURPLE AND HAVE **"RECLAIMED WATER"** CAST INTO THEM, SPL WW-145A.

CITY OF AUSTIN AUSTIN WATER	WATER SERVICE & METER INSTALLATION - 1" & SMALLER METERS	
RECORD COPY SIGNED JEFF A. KYLE 11/07/2018 ADOPTED	THE ARCHITECT/ENGINEER ASSUMES RESPONSIBILITY FOR APPROPRIATE USE OF THIS STANDARD.	STANDARD NO. 520-AW-01B 2 OF 2

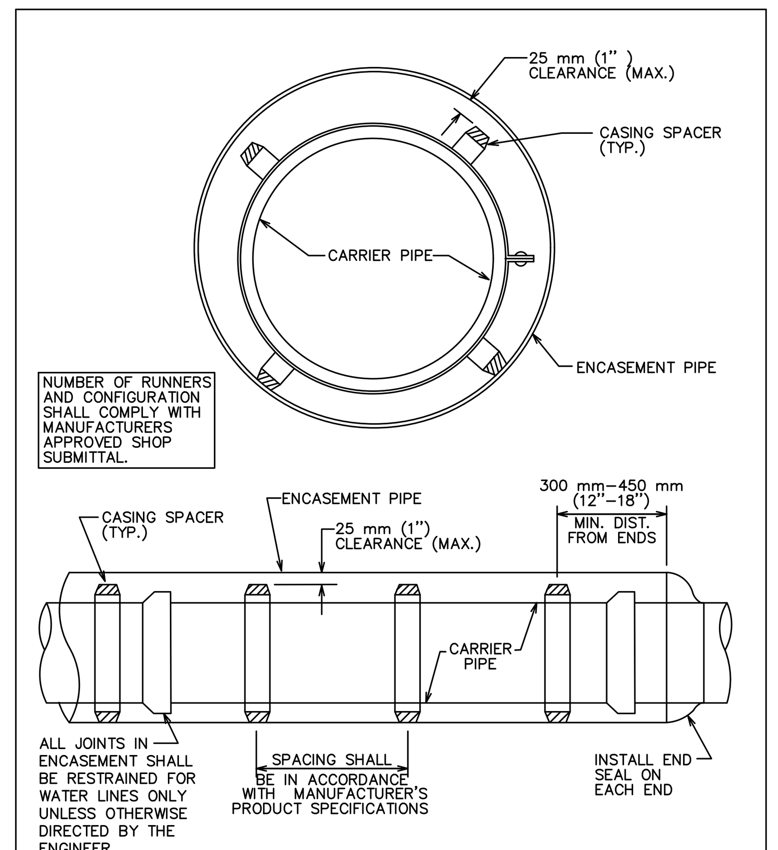

APPLICABLE REFERENCES

STANDARD SPECIFICATION: ITEM 510S.3 (19) W/WW STANDARD PRODUCTS LIST: SPLWW-575 FOR CASING SPACER AND SPLWW-575A FOR END SEAL.

AUSTIN WATER UTILITY	ENCASEMENT DETAIL W/ CASING SPACERS	
RECORD COPY SIGNED BY KATHI L. FLOWERS 2/28/05 ADOPTED	THE ARCHITECT/ENGINEER ASSUMES RESPONSIBILITY FOR APPROPRIATE USE OF THIS STANDARD.	STANDARD NO. 501S-1

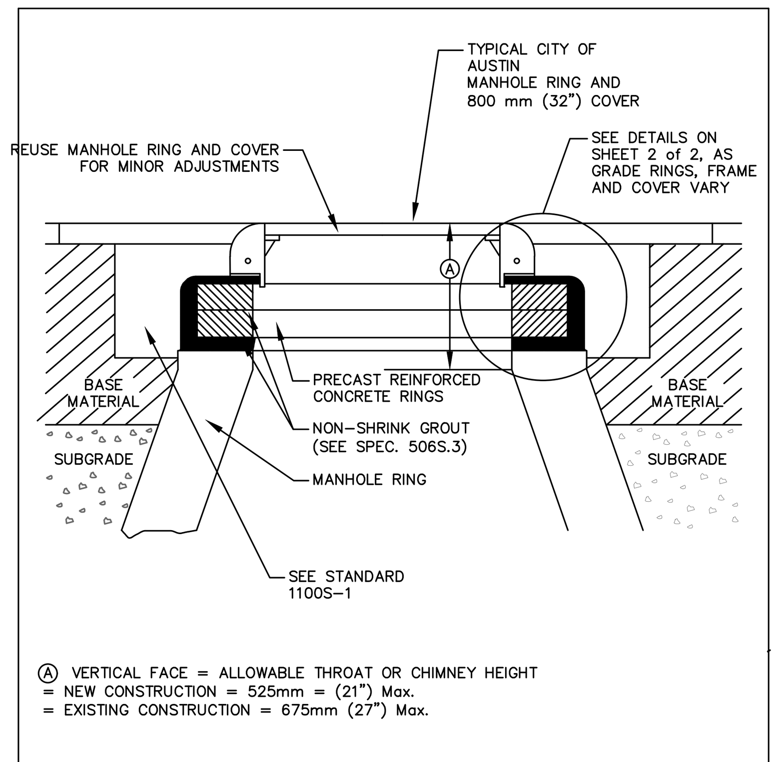

Ⓐ VERTICAL FACE = ALLOWABLE THROAT OR CHIMNEY HEIGHT
= NEW CONSTRUCTION = 525mm = (21") Max.
= EXISTING CONSTRUCTION = 675mm (27") Max.

NOTES:

1. NON-SHRINK GROUT SHALL NOT EXCEED 25 mm (1") IN ANY DIMENSION.
2. SUB-GRADE AND BASE MATERIALS SHALL BE COMPACTED ACCORDING TO ITEMS 201S AND 210S, RESPECTIVELY, OF THE CITY OF AUSTIN STANDARD SPECIFICATIONS.
3. REFER TO STANDARD 1100S-1 FOR REPAIRS AROUND MANHOLES.
4. SEE STANDARD 506S-4A FOR HDPE RING INSTALLATION (FOR USE IN PAVED AREAS ONLY).

CITY OF AUSTIN AUSTIN WATER UTILITY	MINOR MANHOLE ADJUSTMENT & NEW MANHOLE CONSTRUCTION	
RECORD COPY SIGNED BY KATHI L FLOWERS 08/31/2011	THE ARCHITECT/ENGINEER ASSUMES RESPONSIBILITY FOR APPROPRIATE USE OF THIS STANDARD.	STANDARD NO. 506S-4 1 OF 2

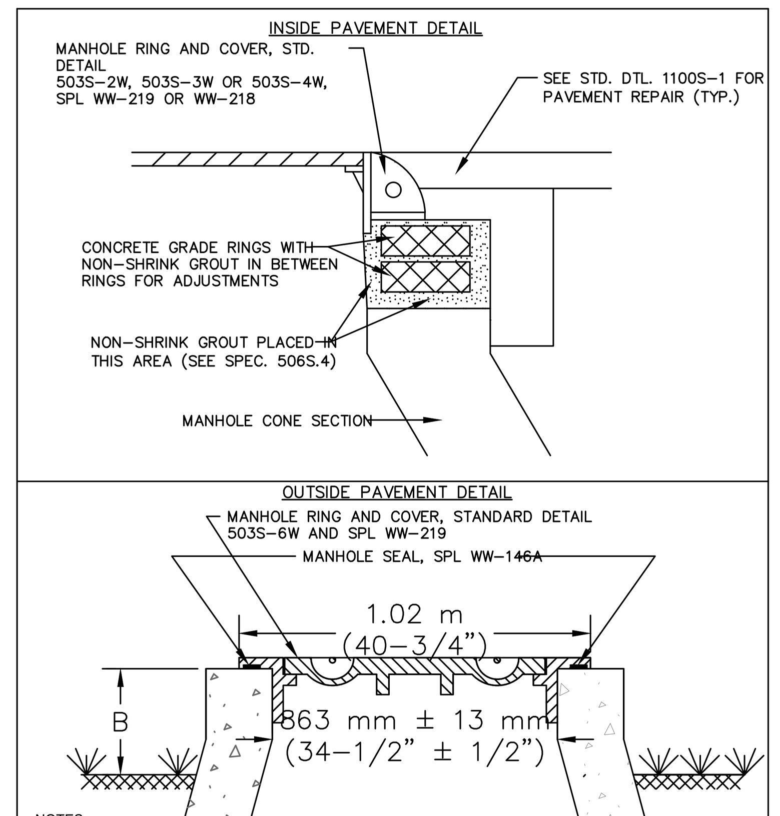

NOTES:

1. FOR USE IN UNPAVED AREAS ONLY
2. WHEN USED WITHIN 100-YEAR FLOODPLAIN, SEE DTL. 506S-6 FOR ADDITIONAL M.H. REQUIREMENTS.
3. DIMENSION B=150-300 mm (6"-12") FOR M.H. LOCATED IN 100-YR FLOOD PLAN.
=50-300 mm (2"-12") FOR M.H. OUTSIDE 100-YR FLOOD PLAN.

CITY OF AUSTIN AUSTIN WATER UTILITY	MINOR MANHOLE ADJUSTMENT & NEW MANHOLE CONSTRUCTION	
RECORD COPY SIGNED BY KATHI L FLOWERS 08/31/2011	THE ARCHITECT/ENGINEER ASSUMES RESPONSIBILITY FOR APPROPRIATE USE OF THIS STANDARD.	STANDARD NO. 506S-4 2 OF 2

NO.	DATE	REVISIONS	SHEET

THE LOCATION OF EXISTING UNDERGROUND UTILITIES ARE SHOWN IN AN APPROXIMATE WAY ONLY. THE CONTRACTOR SHALL DETERMINE THE EXACT LOCATION OF ALL EXISTING UTILITIES BEFORE COMMENCING WORK. HE AGREES TO BE FULLY RESPONSIBLE FOR ANY AND ALL DAMAGES WHICH MIGHT BE OCCASIONED BY HIS FAILURE TO EXACTLY LOCATE AND PRESERVE ANY AND ALL UNDERGROUND UTILITIES.

RIVER STREET HOTEL & HOMES
60 EAST AVENUE, AUSTIN, TX 78701

WATER & WASTEWATER DETAILS

CIVILITUDE
ENGINEERS & PLANNERS
5110 LANCASTER COURT, PHONE 512 761 6161
AUSTIN, TX 78723 FAX 512 761 6167
FIRM REG # F12469 INFO@CIVILITUDE.COM

SCALE: NO SCALE
JOB NO: A379-001
DGN BY: JMS
DWN BY: MAA
RVW BY: JMS

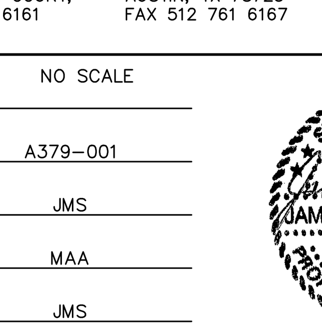

SITE PLAN APPROVAL SHEET 10 OF 18
FILE NUMBER: SP-2019-0465C APPLICATION DATE: 10-21-2019
APPROVED BY COMMISSION ON ________ UNDER SECTION 112 ON
CHAPTER 25-5 OF THE CITY OF AUSTIN CODE
EXPIRATION DATE (25-5-81, LDC)________ CASE MANAGER JEREMY SALTILA
PROJECT EXPIRATION DATE (ORD.#970905-A)________ DWPZ ____ DDZ ____

Director, DEVELOPMENT SERVICES DEPARTMENT
RELEASED FOR GENERAL COMPLIANCE: ________ ZONING: CBD

Rev. 1________ Correction 1________
Rev. 2________ Correction 2________
Rev. 3________ Correction 3________

Final plat must be recorded by the Project Expiration Date, if applicable. Subsequent Site Plans which do not comply with the Code current at the time of filing, and all required Building Permits and/or a notice of construction (if a Building permit is not required), must also be approved prior to the Project Expiration Date.

SHEET NO. 10 OF 18

RIVER STREET HOTEL & HOMES – 60 EAST AVE, AUSTIN, TX 78701

SP–2019–0465C

P:\A379 60 East Avenue\Civil\Construction Drawings\Sheets\12 CIVIL DETAILS.dwg

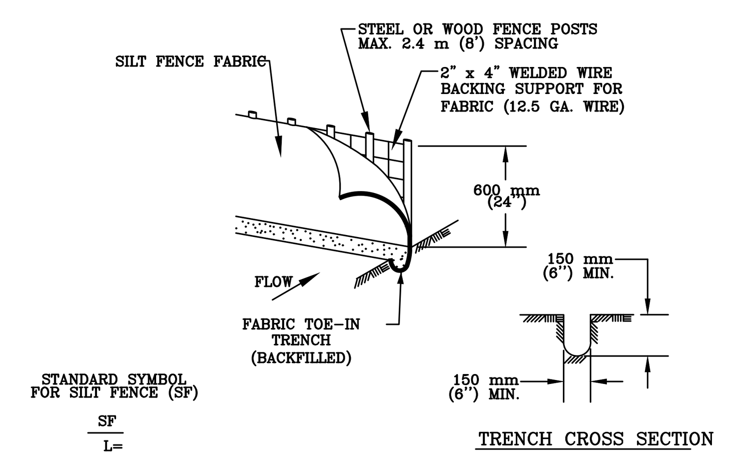

1. STEEL OR WOOD POSTS WHICH SUPPORT THE SILT FENCE SHALL BE INSTALLED ON A SLIGHT ANGLE TOWARD THE ANTICIPATED RUNOFF SOURCE. POST MUST BE EMBEDDED A MINIMUM OF 300 mm (12 INCHES). IF WOOD POSTS CANNOT ACHIEVE 300 mm (12 inches) DEPTH, USE STEEL POSTS.

2. THE TOE OF THE SILT FENCE SHALL BE TRENCHED IN WITH A SPADE OR MECHANICAL TRENCHER, SO THAT THE DOWNSLOPE FACE OF THE TRENCH IS FLAT AND PERPENDICULAR TO THE LINE OF FLOW.

3. THE TRENCH MUST BE A MINIMUM OF 150 mm (6 inches) DEEP AND 150 mm (6 inches) WIDE TO ALLOW FOR THE SILT FENCE FABRIC TO BE LAID IN THE GROUND AND BACKFILLED WITH COMPACTED MATERIAL.

4. SILT FENCE FABRIC SHOULD BE SECURELY FASTENED TO EACH STEEL OR WOOD SUPPORT POST OR TO WOVEN WIRE , WHICH IS IN TURN ATTACHED TO THE STEEL OR WOOD FENCE POST.

5. INSPECTION SHALL BE MADE WEEKLY OR AFTER EACH RAINFALL EVENT AND REPAIR OR REPLACEMENT SHALL BE MADE PROMPTY AS NEEDED.

6. SILT FENCE SHALL BE REMOVED WHEN THE SITE IS COMPLETELY STABILIZED SO AS NOT TO BLOCK OR IMPEDE STORM FLOW OR DRAINAGE.

7. ACCUMULATED SILT SHALL BE REMOVED WHEN IT REACHES A DEPTH OF 150 mm (6 inches). THE SILT SHALL BE DISPOSED OF ON AN APPROVED SITE AND IN SUCH A MANNER THAT WILL NOT CONTRIBUTE TO ADDITIONAL SILTATION.

CITY OF AUSTIN WATERSHED PROTECTION DEPARTMENT	SILT FENCE	
RECORD COPY SIGNED BY MORGAN BYARS 09/01/2011 ADOPTED	THE ARCHITECT/ENGINEER ASSUMES RESPONSIBILITY FOR APPROPRIATE USE OF THIS STANDARD.	STANDARD NO. 642S-1

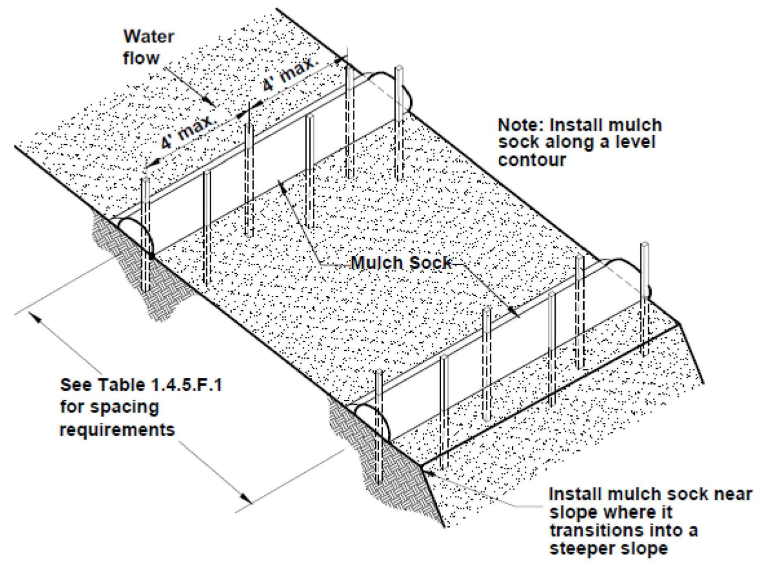

TYPICAL MULCH SOCK INSTALLATION
N.T.S.

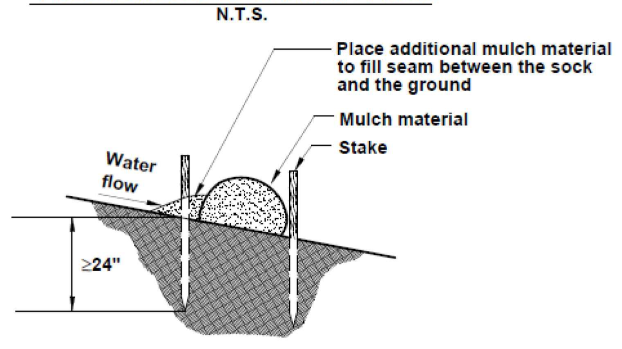

MULCH SOCK
N.T.S.

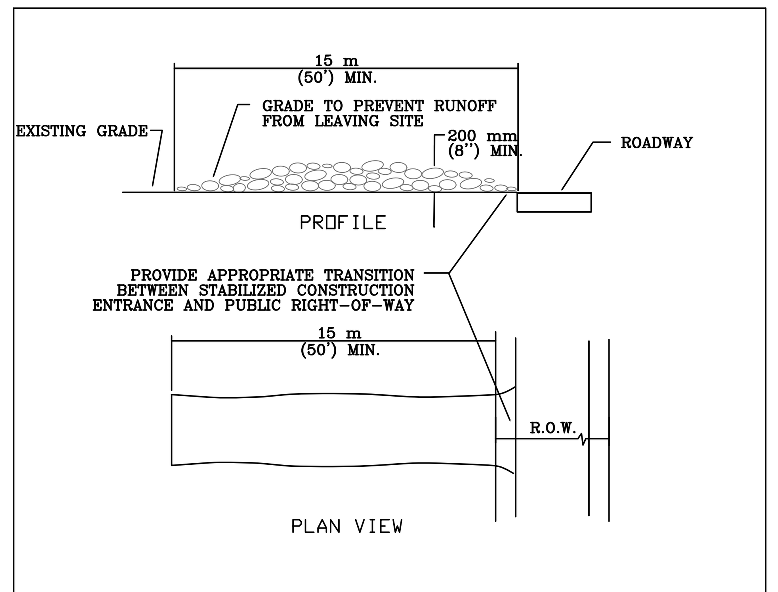

NOTES:
1. STONE SIZE: 75-125 mm (3-5") OPEN GRADED ROCK.
2. LENGTH: AS EFFECTIVE BUT NOT LESS THAN 15 m (50').
3. THICKNESS: NOT LESS THAN 200 mm (8").
4. WIDTH: NOT LESS THAN FULL WIDTH OF ALL POINTS OF INGRESS/EGRESS.
5. WASHING: WHEN NECESSARY, VEHICLE WHEELS SHALL BE CLEANED TO REMOVE SEDIMENT PRIOR TO ENTRANCE ONTO PUBLIC ROADWAY. WHEN WASHING IS REQUIRED, IT SHALL BE DONE ON AN AREA STABILIZED WITH CRUSHED STONE AND DRAINS INTO AN APPROVED TRAP OR SEDIMENT BASIN. ALL SEDIMENT SHALL BE PREVENTED FROM ENTERING ANY STORM DRAIN, DITCH OR WATERCOURSE USING APPROVED METHODS.
6. MAINTENANCE: THE ENTRANCE SHALL BE MAINTAINED IN A CONDITION THAT WILL PREVENT TRACKING OR FLOWING OF SEDIMENT ONTO PUBLIC ROADWAY. THIS MAY REQUIRE PERIODIC TOP DRESSING WITH ADDITIONAL STONE AS CONDITIONS DEMAND, AS WELL AS REPAIR AND CLEAN OUT OF ANY MEASURE DEVICES USED TO TRAP SEDIMENT. ALL SEDIMENTS THAT IS SPILLED, DROPPED, WASHED OR TRACKED ONTO PUBLIC ROADWAY MUST BE REMOVED IMMEDIATELY.
7. DRAINAGE: ENTRANCE MUST BE PROPERLY GRADED OR INCORPORATE A DRAINAGE SWALE TO PREVENT RUNOFF FROM LEAVING THE CONSTRUCTION SITE.

CITY OF AUSTIN WATERSHED PROTECTION DEPARTMENT	STABILIZED CONSTRUCTION ENTRANCE	
RECORD COPY SIGNED BY J. PATRICK MURPHY 5/23/00 ADOPTED	THE ARCHITECT/ENGINEER ASSUMES RESPONSIBILITY FOR APPROPRIATE USE OF THIS STANDARD.	STANDARD NO. 641S-1

GeoSolutions, Inc. — Product Data Sheet
GeoCurve Inlet Filter

The GeoCurve Inlet Filter is a stormwater filter for placement into a stormwater curb inlet for the purpose of capturing debris and sediment that is transported by stormwater runoff. The device is comprised of a filter media (woven monofilament filter fabric) affixed to the lower portion of a "C" shaped 12 gauge welded wire frame (2" x 4" openings) with an upper retention flange. The device effectively filters stormwater, can easily be removed for maintenance and cleaning and incorporates an overflow window for heavy storm events.

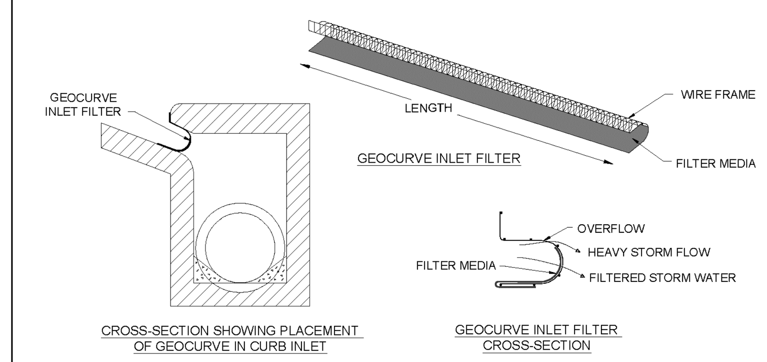

FILTER MEDIA PROPERTIES: Mono-filament Woven Filter Fabric

PROPERTY	ASTM TEST METHOD	VALUE	C.O.A. REQ'T
Fabric Weight	D 3776	4.5 oz/sy	3 oz/sy
Grab Tensile Strength	D 4632	170 lbs	----
Mullen Burst Strength	D 3786	410 lbs/sq in	120 lbs/sq in
UV Stability	D 4355	80 %	70 %
Water Flow Rate	D 4491	325 gal/min/sf	275 gal/min/sf

GeoSolutions, Inc. 4417 Burleson Road Austin, Texas 78744 512-330-0796

CURB INLET PROTECTION NOTES:
THE INLET PROTECTION DEVICES SHOULD BE CONSTRUCTED IN A MANNER THAT WILL FACILITATE CLEAN OUT AND DISPOSAL OF TRAPPED SEDIMENT AND NOT CAUSE EXCESSIVE R.O.W. FLOODING.

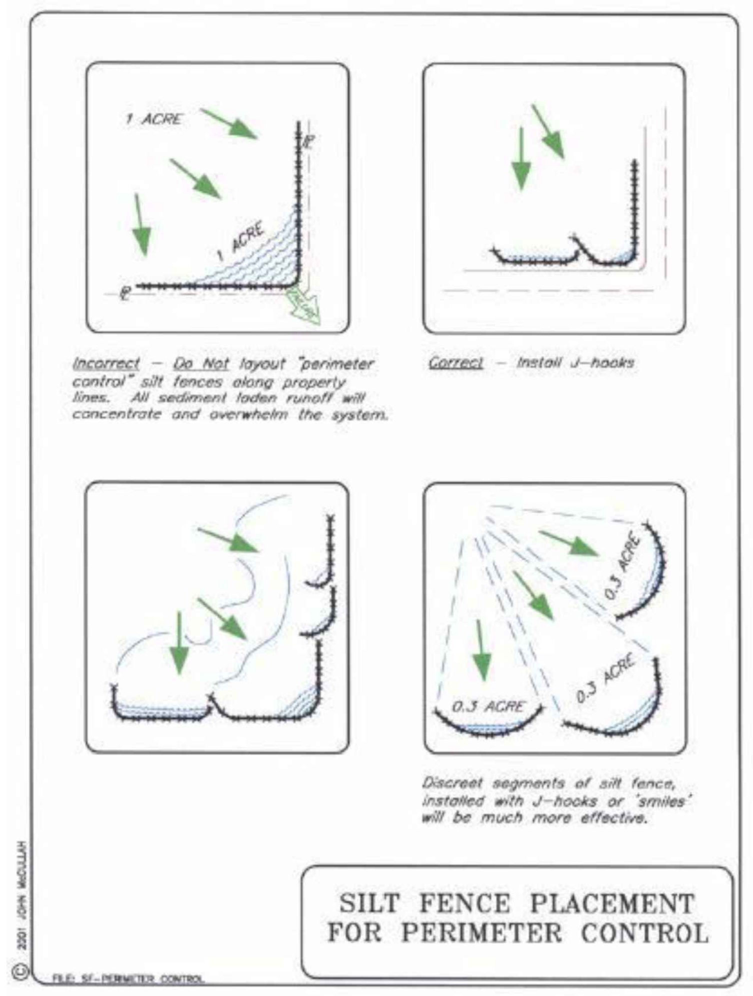

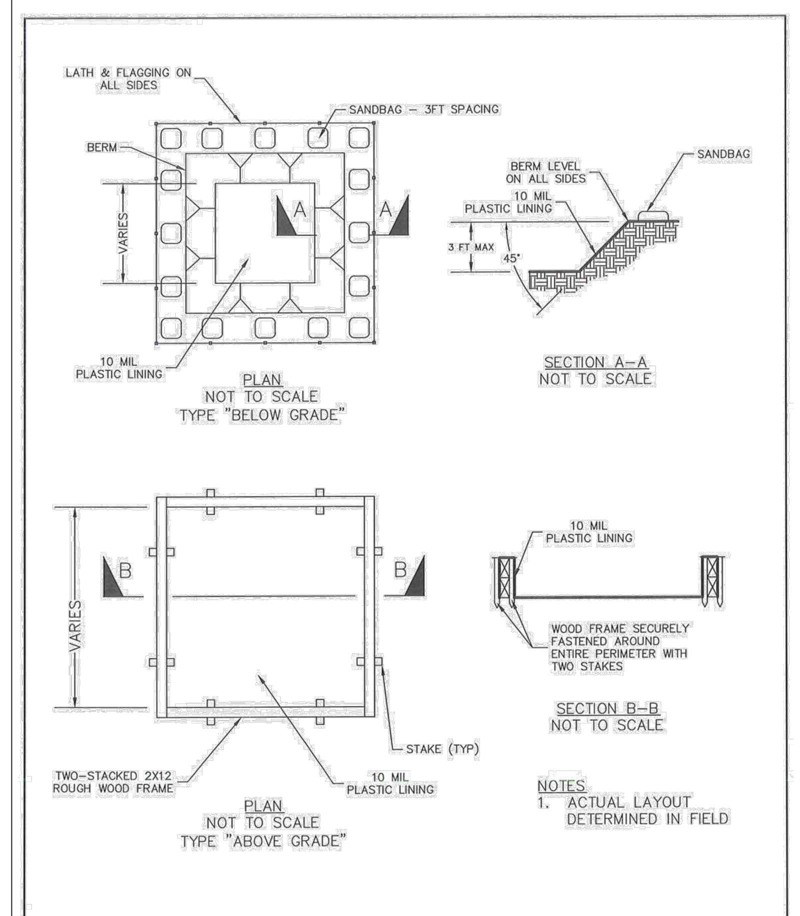

CONCRETE WASHOUT DETAIL

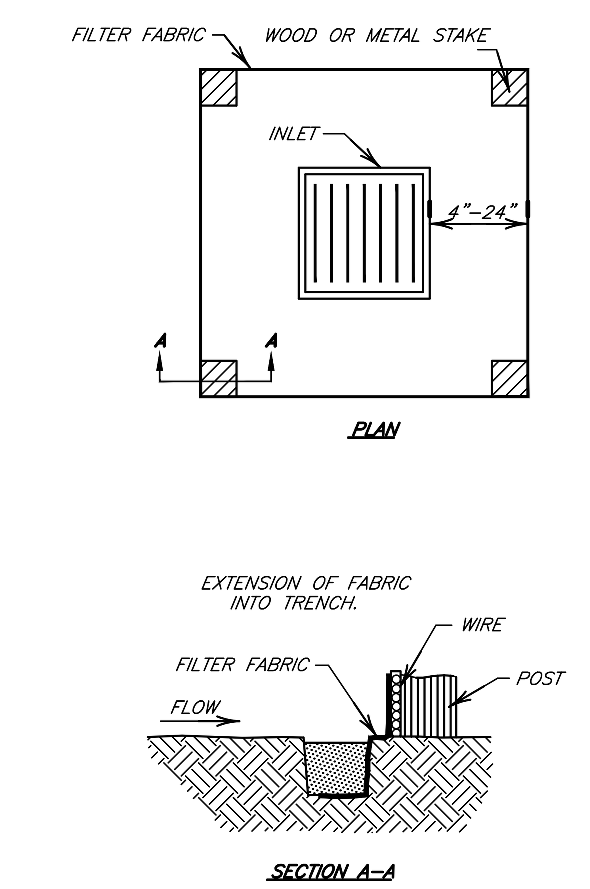

GRATE INLET PROTECTION
SCALE: N.T.S.

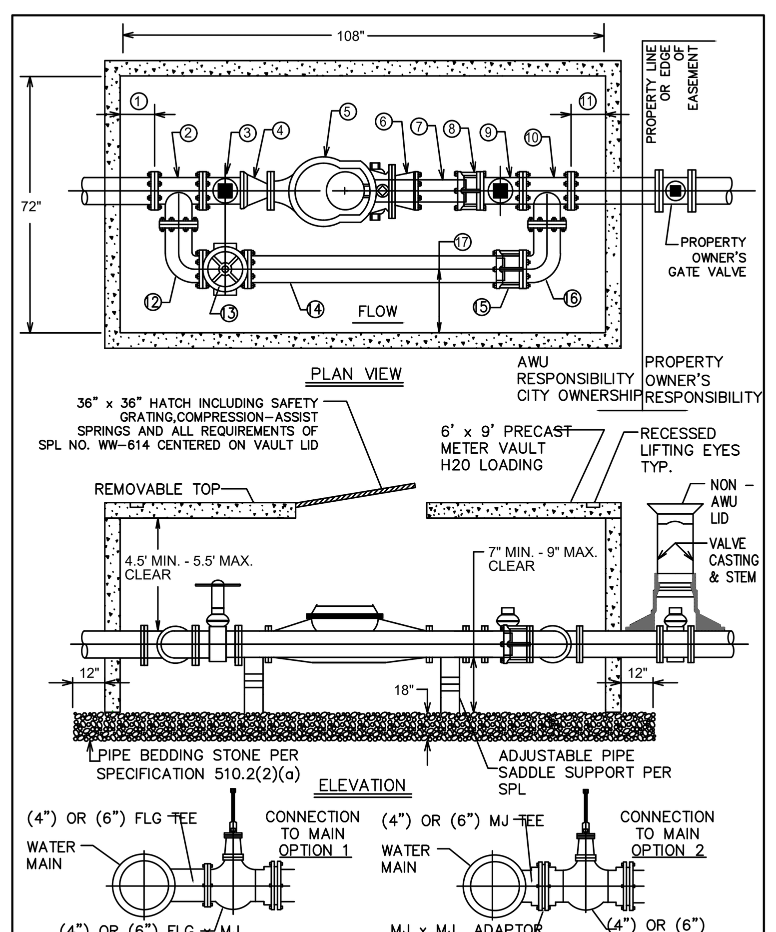

CITY OF AUSTIN AUSTIN WATER UTILITY	3", 4" AND 6" COMPOUND & TURBINE METER INSTALLATIONS	
RECORD COPY SIGNED BY KATHI L FLOWERS 11/19/2015 ADOPTED	THE ARCHITECT/ENGINEER ASSUMES RESPONSIBILITY FOR APPROPRIATE USE OF THIS STANDARD.	STANDARD NO. 520-AW-06 1 OF 2

LARGE METER INSTALLATIONS

No.	DIMENSIONS IN INCHES / METER LINE	3" TURBINE 4" BYPASS	3" COMPOUND 4" BYPASS	4" TURBINE 4" BYPASS	4" COMPOUND 4" BYPASS	6" TURBINE 6" BYPASS	6" COMPOUND 6" BYPASS
1	CLEARANCE FROM VALVE WALL TO TEE	8"	8"	12"	12"	6"	6"
2	FLANGED TEE	13"	13"	13"	13"	16"	16"
3	COA GATE VALVE SQUARE NUT	9"	9"	9"	9"	10 1/2"	10 1/2"
4	3" X 4" FLANGED REDUCER (3" METER ONLY)	7"	7"	–	–	–	–
5	METER	17"	19"	20"	23"	24"	27"
6	3" X 4" FLANGED REDUCER (3" METER ONLY)	7"	7"	–	–	–	–
7+8	(7) FLANGED X PLAIN END DI PIPE + (8) RESTRAINED FLANGE COUPLING ADAPTER (RFCA) OR (7) FLANGE X DI PIPE + (8) DISMANTLING JOINT (DJ)	17"	15"	20"	17"	19"	16"
9	COA GATE VALVE SQUARE NUT	9"	9"	9"	9"	10 1/2"	10 1/2"
10	FLANGED TEE	13"	13"	13"	13"	16"	16"
11	CLEARANCE FROM INSIDE WALL TO TEE	8"	8"	12"	12"	6"	6"
	TOTAL (INCHES)	108.0"	108.0"	108.0"	108.0"	108.0"	108.0"
	BYPASS LINE						
1	CLEARANCE FROM INSIDE WALL TO TEE	8"	8"	12"	12"	6"	6"
	1/2 TEE	6 1/2"	6 1/2"	6 1/2"	6 1/2"	8"	8"
12	FLANGED 90° ELBOW	6 1/2"	6 1/2"	6 1/2"	6 1/2"	8"	8"
13	BYPASS GATE VALVE WITH HAND WHEEL	9"	9"	9"	9"	10 1/2"	10 1/2"
14+15	(14) FLANGED X PLAIN END DI PIPE + (15) RESTRAINED FLANGE COUPLING ADAPTOR (RFCA) OR (14) FLANGE X FLANGE DI PIPE + (15) DISMANTLING JOINT (DJ)	57"	57"	49"	49"	53 1/2"	53 1/2"
16	FLANGED 90° ELBOW	6 1/2"	6 1/2"	6 1/2"	6 1/2"	8"	8"
	1/2 TEE	6 1/2"	6 1/2"	6 1/2"	6 1/2"	8"	8"
11	CLEARANCE FROM VALVE WALL TO TEE	8"	8"	12"	12"	6"	6"
	TOTAL (INCHES)	108.0"	108.0"	108.0"	108.0"	108.0"	108.0"
17	CLEARANCE FROM INSIDE WALL TO CENTER OF BYPASS LINE	23"	23"	23"	23"	20"	20"

NOTES:
1. METER VAULT MUST BE PLACED AT THE PROPERTY LINE WITHIN PUBLIC RIGHT-OF-WAY OR WITHIN A DEDICATED WATER METER EASEMENT. METER SHALL NOT BE PLACED IN THE PATH OF VEHICULAR TRAFFIC INCLUDING ROADWAYS, DRIVEWAYS AND PARKING LOTS. METERS MAY NOT BE PLACED IN SIDEWALKS UNLESS SPECIFICALLY APPROVED BY AUSTIN WATER. METERS MUST BE ACCESSIBLE TO SERVICE VEHICLES AND SHALL NOT BE ENCLOSED WITHIN PROPERTY FENCES.
2. ALL PIPE AND FITTINGS FROM MAIN TO CUSTOMER VALVE SHALL BE RESTRAINED.
3. FACTORY NOTCHES WHERE PIPING GOES THROUGH VAULT WALL SHALL BE FILLED WITH NON-SHRINK GROUT PER SPL NO. WW-704A.

CITY OF AUSTIN AUSTIN WATER UTILITY	3", 4" AND 6" COMPOUND & TURBINE METER INSTALLATIONS	
RECORD COPY SIGNED BY KATHI L FLOWERS 11/19/2015 ADOPTED	THE ARCHITECT/ENGINEER ASSUMES RESPONSIBILITY FOR APPROPRIATE USE OF THIS STANDARD.	STANDARD NO. 520-AW-06 2 OF 2

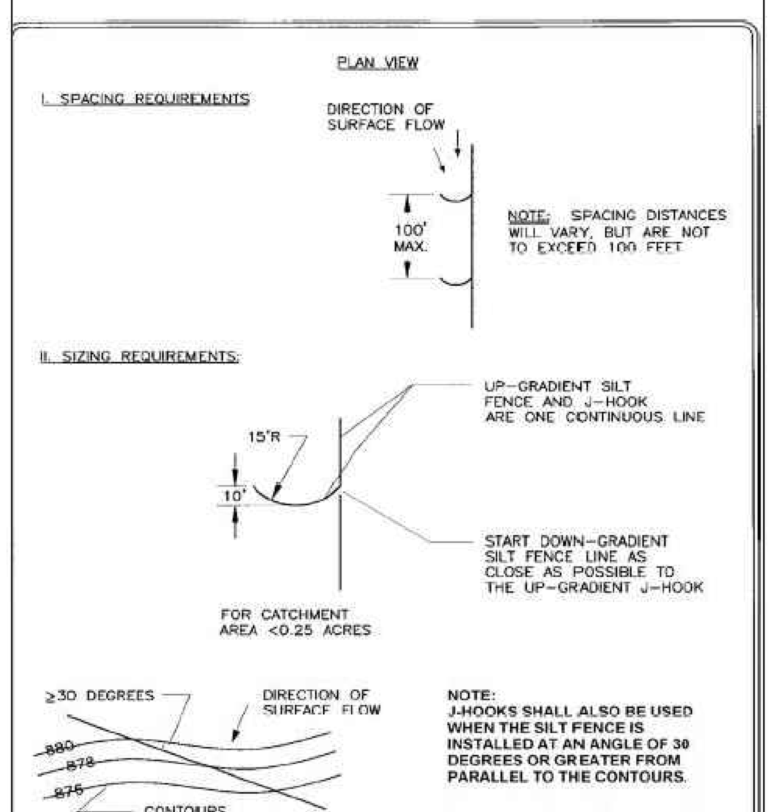

NO.	DATE	REVISIONS	SHEET

THE LOCATION OF EXISTING UNDERGROUND UTILITIES ARE SHOWN IN AN APPROXIMATE WAY ONLY. THE CONTRACTOR SHALL DETERMINE THE EXACT LOCATION OF ALL EXISTING UTILITIES BEFORE COMMENCING WORK. HE AGREES TO BE FULLY RESPONSIBLE FOR ANY AND ALL DAMAGES WHICH MIGHT BE OCCASIONED BY HIS FAILURE TO EXACTLY LOCATE AND PRESERVE ANY AND ALL UNDERGROUND UTILITIES.

RIVER STREET HOTEL & HOMES
60 EAST AVENUE, AUSTIN, TX 78701

EROSION CONTROL DETAILS

CIVILITUDE
ENGINEERS & PLANNERS
5110 LANCASTER COURT, AUSTIN, TX 78723 FIRM REG # F12469
PHONE 512 761 6161 FAX 512 761 6167 INFO@CIVILITUDE.COM

SCALE: NO SCALE
JOB NO: A379–001
DGN BY: JMS
DWN BY: MAA
RVW BY: JMS

STATE OF TEXAS — JAMES M. SCHISSLER — 82472 — LICENSED PROFESSIONAL ENGINEER

SITE PLAN APPROVAL SHEET 11 OF 18
FILE NUMBER: SP-2019-0465C APPLICATION DATE: 10-21-2019
APPROVED BY COMMISSION ON ____ UNDER SECTION 112 ON
CHAPTER 25-5 OF THE CITY OF AUSTIN CODE
EXPIRATION DATE (25–5–81, LDC)____ CASE MANAGER JEREMY SALTILA
PROJECT EXPIRATION DATE (ORD.#970905–A)____ DWPZ ____ DDZ ____

Director, DEVELOPMENT SERVICES DEPARTMENT
RELEASED FOR GENERAL COMPLIANCE: ____ ZONING: CBD
Rev. 1____ Correction 1____
Rev. 2____ Correction 2____
Rev. 3____ Correction 3____

Final plat must be recorded by the Project Expiration Date, if applicable. Subsequent Site Plans which do not comply with the Code current at the time of filing, and all required Building Permits and/or a notice of construction (if a Building permit is not required), must also be approved prior to the Project Expiration Date.

SHEET NO. 11 OF 18

RIVER STREET HOTEL & HOMES – 60 EAST AVE, AUSTIN, TX 78701

SP–2019–0465C

P:\A379 60 East Avenue\Civil\Construction Drawings\Sheets\12 CIVIL DETAILS.dwg

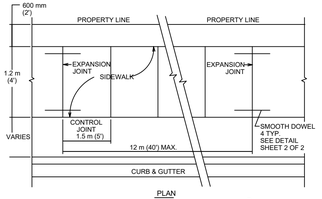

PLAN

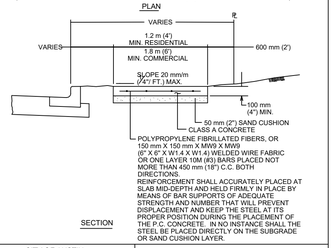

SECTION

CITY OF AUSTIN DEPARTMENT OF PUBLIC WORKS		SIDEWALK	
RECORD COPY SIGNED BY BILL GARDNER	03/26/08	THE ARCHITECT/ENGINEER ASSUMES RESPONSIBILITY FOR APPROPRIATE USE OF THIS STANDARD.	STANDARD NO. 432S-1
ADOPTED			1 OF 3

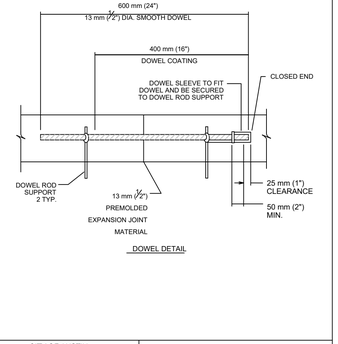

DOWEL DETAIL

CITY OF AUSTIN DEPARTMENT OF PUBLIC WORKS		SIDEWALK	
RECORD COPY SIGNED BY BILL GARDNER	03/26/08	THE ARCHITECT/ENGINEER ASSUMES RESPONSIBILITY FOR APPROPRIATE USE OF THIS STANDARD.	STANDARD NO. 432S-1
ADOPTED			2 OF 3

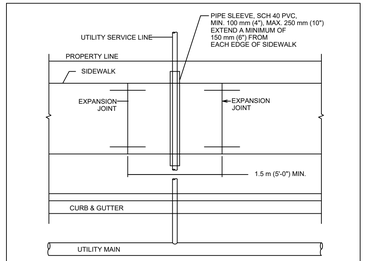

SIDEWALK OVER UTILITY SERVICE LINE PLAN

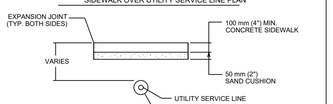

SECTION OF SIDEWALK OVER UTILITY SERVICE LINES

NOTES:
1. THIS STANDARD APPLIES TO THE INSTALLATION OF NEW UTILITIES OR UTILITIES BEING REPLACED BY A NEW LINE.
2. NO JOINTS IN UTILITY SERVICE PIPE TO BE LOCATED INSIDE PVC PIPE SLEEVE.

CITY OF AUSTIN DEPARTMENT OF PUBLIC WORKS		SIDEWALK	
RECORD COPY SIGNED BY BILL GARDNER	03/26/08	THE ARCHITECT/ENGINEER ASSUMES RESPONSIBILITY FOR APPROPRIATE USE OF THIS STANDARD.	STANDARD NO. 432S-1
ADOPTED			3 OF 3

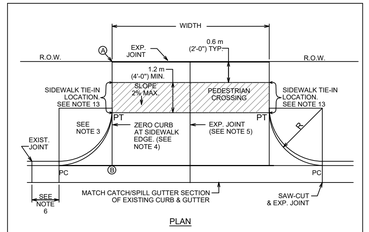

PLAN

NOTE: ALL DRIVEWAYS SHALL BE SLOPED TOWARDS THE STREET FROM THE R.O.W. LINE. ELEVATION OF POINT (A) ABOVE POINT (B) IS TYPICALLY A MINIMUM OF 150 mm (6") PLUS 20 mm/m (2" RISE/FOOT) OVER DISTANCE "X" IN METERS (FEET).

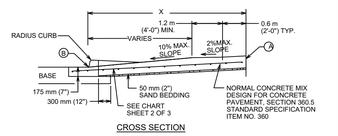

CROSS SECTION

CITY OF AUSTIN DEPARTMENT OF PUBLIC WORKS		TYPE II DRIVEWAY	
RECORD COPY SIGNED BY CUONG TRAN	02/24/10	THE ARCHITECT/ENGINEER ASSUMES RESPONSIBILITY FOR APPROPRIATE USE OF THIS STANDARD.	STANDARD NO. 433S-2
ADOPTED			1 OF 2

USE	THICKNESS	REINFORCEMENT
DRIVEWAYS FOR PASSENGER VEHICLE PARKING LOTS	150 mm (6") MIN.	125 mm (5") MIN. CONCRETE WITH ONE LAYER OF 13M (#4) BARS PLACED ON CHAIRS AT MIDDEPTH OF SLAB AT NO MORE THAN 450 mm (18") O.C. BOTH DIRECTIONS
ALL OTHERS	175 mm (7") MIN.	125 mm (5") MIN. CONCRETE WITH ONE LAYER OF 13M (#4) BARS PLACED ON CHAIRS AT MIDDEPTH OF SLAB AT NO MORE THAN 450 mm (18") O.C. BOTH DIRECTIONS

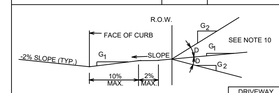

ALLOWABLE GRADES

DRIVEWAY VOLUME (ADT)	D+GRADE CHANGE STD.	D+GRADE CHANGE MAX
>1500	0%	3%
500-1500	3%	6%
< 500	6%	15%

NOTES:
1. ALL TYPE II DRIVEWAYS SHALL HAVE RADIUS ENDS.
2. DRIVEWAY WIDTHS AND RADII DIMENSIONS, ONE/TWO WAY TRAVEL REQUIREMENTS, AND GEOMETRIC LAY-OUT ARE HIGHLY VARIABLE, SUBJECT TO SITE SPECIFIC CONDITIONS AND REQUIREMENTS. SEE TRANSPORTATION CRITERIA MANUAL, SECTION 5 "DRIVEWAYS".
3. THE DRIVEWAY EDGE SHALL BE SMOOTHLY TRANSITITIONED INTO THE SIDEWALK TIE-IN LOCATION BEGINNING AT THE RADIUS PC LINE.
4. "ZERO" CURB AT PT OR SIDEWALK EDGE, WHICHEVER IS ENCOUNTERED FIRST.
5. PLACE AN EXPANSION JOINT DOWN THE CENTER OF DRIVEWAY ALL DRIVEWAYS.
6. IF DIMENSION IS LESS THAN 1.5 METERS (5 FEET), REMOVE CURB AND GUTTER TO EXISTING JOINT AND POUR MONOLITHICALLY WITH DRIVEWAY.
7. IF THE BASE IS OVER-EXCAVATED WHERE THE CURB AND GUTTER WERE REMOVED, BACKFILL WITH CONCRETE MONOLITHICALLY WITH THE DRIVEWAY.
8. TYPE II DRIVEWAYS ARE TO BE LOCATED NO CLOSER TO THE CORNER OF INTERSECTING RIGHT OF WAY THAN 65% OF PARCEL FRONTAGE AT 30 METERS (100 FEET), WHICHEVER IS LESS.
9. DRIVEWAY SHALL NOT BE CONSTRUCTED WITHIN THE CURB RETURN OF A STREET INTERSECTION.
10. WHILE THE PROPERTY OWNER REMAINS RESPONSIBLE FOR GRADE BREAKS WITHIN PRIVATE PROPERTY, THE FIRE DEPARTMENT SHALL BE CONSULTED WHERE THE DRIVEWAY IS ESSENTIAL TO EMERGENCY VEHICLE ACCESS AND "Cu" IS GREATER THAN 15%.
11. USE 12 MM (1/2") ASPHALT BOARD OR OTHER APPROVED MATERIAL FOR CURB AND GUTTER EXPANSION JOINTS. SIDEWALK, AT THE R.O.W. LINE AND AT MIDWIDTH, SEE NOTE 5.
12. SEE TRANSPORTATION CRITERIA MANUAL, SECTION 5 FOR OTHER DRIVEWAY REQUIREMENTS.
13. THE SIDEWALK, REGARDLESS OF ITS LOCATION WITH RESPECT TO THE CURB OR PROPERTY LINE, SHALL BE CONNECTED TO THE DRIVEWAY AT THESE LOCATIONS.
14. WATER METER BOXES AND WASTEWATER CLEAN OUTS ARE PROHIBITED FROM BEING LOCATED IN DRIVEWAY AREAS.

CITY OF AUSTIN DEPARTMENT OF PUBLIC WORKS		TYPE II DRIVEWAY	
RECORD COPY SIGNED BY CUONG TRAN	02/24/10	THE ARCHITECT/ENGINEER ASSUMES RESPONSIBILITY FOR APPROPRIATE USE OF THIS STANDARD.	STANDARD NO. 433S-2
ADOPTED			2 OF 2

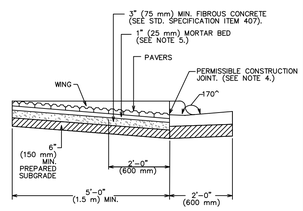

CROSS SECTION

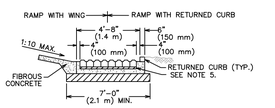

FRONT END VIEW

CITY OF AUSTIN DEPARTMENT OF PUBLIC WORKS		DETECTABLE WARNING–PAVER (PRIVATE PROPERTY)	
RECORD COPY SIGNED BY BILL GARDNER	06/21/07	THE ARCHITECT/ENGINEER ASSUMES RESPONSIBILITY FOR APPROPRIATE USE OF THIS STANDARD.	STANDARD NO. 432S–2B
ADOPTED			1 OF 2

GENERAL NOTES:
1. THIS STANDARD IS APPLICABLE FOR RAMP CONSTRUCTION WITHIN PRIVATE PROPERTY ONLY.
2. PAVERS ARE REQUIRED FOR ALL CURB RAMP INSTALLATIONS.
3. PAVERS WILL HAVE DETECTABLE WARNING THAT CONSISTS OF RAISED TRUNCATED DOMES WITH A DIAMETER OF 0.9" (23 mm), A NOMINAL HEIGHT OF 0.2" (5 mm) AND A NOMINAL CENTER TO CENTER SPACING OF 2.35" (60 mm) AND SHALL CONSTRAST VISUALLY WITH ADJOINING SURFACES, EITHER LIGHT–ON–DARK OR DARK–ON–LIGHT (Re: ADAAG SECTION 4.29.2). MATERIAL USED TO PROVIDE CONTRAST SHALL BE AN INTEGRAL PART OF THE WALKING SURFACE. PAVER PATTERN SHALL BE BASKET WEAVE UNLESS DIRECTED OTHERWISE BY THE ENGINEER OR DESIGNATED REPRESENTATIVE.
4. TYPICAL SIDEWALK WIDTHS AND CURB RADII ARE SHOWN FOR ILLUSTRATION ONLY. REFER TO THE TRANSPORTATION CRITERIA MANUAL FOR SIDEWALK WIDTHS, CURB RADII AND CURB BASIS.
5. THE PERMISSIBLE CONSTRUCTION JOINT BETWEEN THE PAVERS AND THE ADJOINING SURFACE SHALL BE LIMITED TO A" (6 mm) JOINT SIZE. GAPS LARGER THAN A" (6 mm) MUST BE APPROVED BY THE ENGINEER OR DESIGNATED REPRESENTATIVE. ALL JOINTS BETWEEN BRICKS AND ADJOINING SURFACE SHALL BE MORTAR FILLED UNLESS DIRECTED OTHERWISE BY THE ENGINEER OR DESIGNATED REPRESENTATIVE.
6. MORTAR SHALL CONFORM TO STD. SPECIFICATION ITEM SECTION 403S.3.5, MORTAR AND GROUT. ALL OTHER CONCRETE SHALL CONFORM TO STD. SPECIFICATION ITEM 403S, CONCRETE FOR STRUCTURES, UNLESS OTHERWISE NOTED.
7. CURB RAMPS WITH RETURNED CURB MAY ONLY BE USED WHERE PEDESTRIANS WOULD NOT NORMALLY WALK DIAGONALLY ACROSS THE RAMP.

CITY OF AUSTIN DEPARTMENT OF PUBLIC WORKS		DETECTABLE WARNING–PAVER (PRIVATE PROPERTY)	
RECORD COPY SIGNED BY BILL GARDNER	06/21/07	THE ARCHITECT/ENGINEER ASSUMES RESPONSIBILITY FOR APPROPRIATE USE OF THIS STANDARD.	STANDARD NO. 432S–2B
ADOPTED			2 OF 2

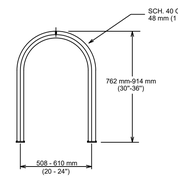

FRONT VIEW

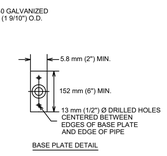

BASE PLATE DETAIL

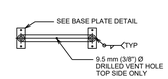

TOP VIEW

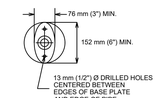

ALT BASE PLATE DETAIL (CIRCULAR OR OVAL PLATE)

GENERAL NOTES:
1. RACK INSTALLATION METHOD SHALL COMPLY WITH CITY STANDARD DETAIL 710S-3, 710S-4, OR 710S-5.
2. RACK PLACEMENT SHALL COMPLY WITH APPLICABLE CITY STANDARD DETAILS 710S-6A, 710S-6B, OR 710S-6C AND CITY OF AUSTIN CODE SECTION 25-6-477 OR ITS SUCCESSOR.
3. BASE PLATES TO BE 6.35 mm (1/4") PLATES, ASTM A-36 1010-1018 LOW CARBON PRIME STEEL

CITY OF AUSTIN DEPARTMENT OF PUBLIC WORKS		CLASS III STYLE BICYCLE PARKING	
RECORD COPY SIGNED BY COUNG TRAN	09/26/12	THE ARCHITECT/ENGINEER ASSUMES RESPONSIBILITY FOR APPROPRIATE USE OF THIS STANDARD.	STANDARD NO. 710S-1
ADOPTED			1 OF 1

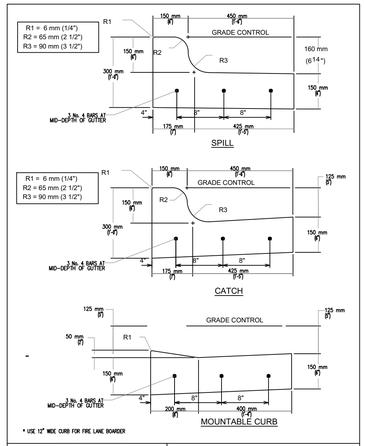

CITY OF AUSTIN DEPARTMENT OF PUBLIC WORKS		REINFORCED CURB AND GUTTER SECTION	
	01/04/10	THE ARCHITECT/ENGINEER ASSUMES RESPONSIBILITY FOR APPROPRIATE USE OF THIS STANDARD.	STANDARD NO. 430S-1
ADOPTED			

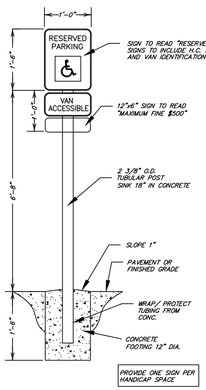

SIGN POST INSTALLATION DETAILS
SCALE: N.T.S.

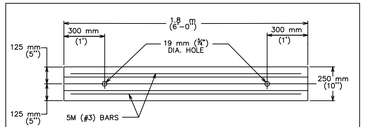

PLAN

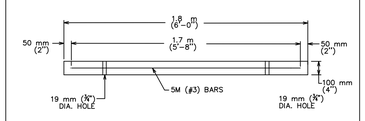

LONGITUDINAL SECTION

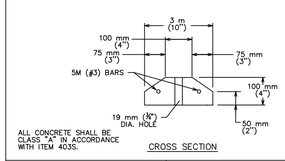

ALL CONCRETE SHALL BE CLASS "A" IN ACCORDANCE WITH ITEM 403S.

CROSS SECTION

CITY OF AUSTIN DEPARTMENT OF PUBLIC WORKS		PARKING LOT BUMPER CURB	
RECORD COPY SIGNED BY BILL GARDNER	3/15/05	THE ARCHITECT/ENGINEER ASSUMES RESPONSIBILITY FOR APPROPRIATE USE OF THIS STANDARD.	STANDARD NO. 439S–1
APPROVED	ADOPTED		

TRENCH REPAIR IN ASPHALTIC SURFACE OVER FLEXIBLE BASE (UCM SECTION 5.8.0)

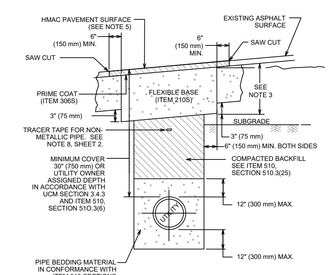

CITY OF AUSTIN DEPARTMENT OF PUBLIC WORKS		FLEXIBLE BASE WITH ASPHALT SURFACE TRENCH REPAIR-EXISTING PAVEMENT	
RECORD COPY SIGNED BY KERI JUAREZ	01/04/11	THE ARCHITECT/ENGINEER ASSUMES RESPONSIBILITY FOR APPROPRIATE USE OF THIS STANDARD.	STANDARD NO. 1100S-2
ADOPTED			1 OF 2

NOTES:
1. THE EXISTING PAVING SURFACE SHALL BE SAW CUT IN A STRAIGHT LINE, A MINIMUM OF 12" (300 mm) WIDER THAN UNDISTURBED SIDES OF THE TRENCH AND SYMMETRICAL ABOUT THE CENTER LINE OF THE EXCAVATION.
2. IF EXCAVATION AREA IS OPEN FOR TEMPORARY PUBLIC USE, THE SURFACE SHALL BE MAINTAINED LEVEL WITH ADJACENT RIDING SURFACE WITH COLD MIX AC OR TEMPORARY HMAC. TEMPORARY MIX SHALL BE PLACED OVER FLEXIBLE BASE.
3. ROAD BASE SHALL BE REPLACED IN KIND WITH BASE THICKNESS EQUAL TO EXISTING BASE THICKNESS PLUS 3" (75 mm), BUT IN NO CASE LESS THAN 12" (300 mm).
4. DAMAGED PAVEMENT OUTSIDE THE TRENCH CUT SHALL BE REMOVED AND REPLACED WITH A BASE THICKNESS OF 10" (250 mm) OR A THICKNESS MATCHING EXISTING, WHICHEVER IS GREATER.
5. REPLACEMENT AC SURFACE LAYER SHALL BE OF THE TYPE AND THICKNESS BASED ON FUNCTIONAL CLASSIFICATION.
   a) MIN. 2" (50 mm) HMAC TYPE "D" FOR TRENCH REPAIR IN LOCAL/RESIDENTIAL STREETS.
   b) MIN. 3" (75 mm) HMAC TYPE "C" FOR TRENCH REPAIR IN COLLECTOR/ARTERIAL STREETS.
   SEE ITEM 340S, SECTION 340S.4.
6. CLASS "J" PC CONCRETE (ITEM 403S) OR CONTROLLED LOW STRENGTH MATERIAL (CLSM) MAY BE SUBSTITUTED IN THESE REPAIRS FOR THE FLEXIBLE BASE AND COMPACTED BACKFILL. PC CONCRETE GREATER THAN A 2 SACK MIX WILL NOT BE ALLOWED.
7. TACK COAT ALL EXPOSED EDGES AND SURFACES (SPEC ITEM 307S).
8. AS PER CITY OF AUSTIN STANDARD SPECIFICATION 510, SECTION 510.2(B)(K)5, FOR ALL NON-METALLIC PIPE, DIRECTLY ABOVE THE CENTERLINE OF THE PIPE AND A MINIMUM OF 12" (300 mm) BELOW THE SUBGRADE, OR A MINIMUM OF 18" (450 mm) BELOW FINISHED GRADE ON AREAS OUTSIDE THE LIMITS OF PAVEMENT, SHALL BE PLACED INDUCTIVE TRACER TAPE IN ACCORDANCE WITH THE MANUFACTURER'S RE-QUIREMENTS. THE TAPE SHALL BE ENCASED IN A PROTECTIVE, INERT, PLASTIC JACKET AND COLOR CODED IN ACCORDANCE WITH APWA UNIFORM COLOR CODE.

CITY OF AUSTIN DEPARTMENT OF PUBLIC WORKS		FLEXIBLE BASE WITH ASPHALT SURFACE TRENCH REPAIR-EXISTING PAVEMENT	
RECORD COPY SIGNED BY KERI JUAREZ	01/04/11	THE ARCHITECT/ENGINEER ASSUMES RESPONSIBILITY FOR APPROPRIATE USE OF THIS STANDARD.	STANDARD NO. 1100S-2
ADOPTED			2 OF 2

NO.	DATE	REVISIONS	SHEET

THE LOCATION OF EXISTING UNDERGROUND UTILITIES ARE SHOWN IN AN APPROXIMATE WAY ONLY. THE CONTRACTOR SHALL DETERMINE THE EXACT LOCATION OF ALL EXISTING UTILITIES BEFORE COMMENCING WORK. HE AGREES TO BE FULLY RESPONSIBLE FOR ANY AND ALL DAMAGES WHICH MIGHT BE OCCASIONED BY HIS FAILURE TO EXACTLY LOCATE AND PRESERVE ANY AND ALL UNDERGROUND UTILITIES.

RIVER STREET HOTEL & HOMES
60 EAST AVENUE, AUSTIN, TX 78701

CIVIL DETAILS

CIVILITUDE
ENGINEERS & PLANNERS
5110 LANCASTER COURT, AUSTIN, TX 78723 FIRM REG # F12469
PHONE 512 761 6161 FAX 512 761 6167 INFO@CIVILITUDE.COM

SCALE: NO SCALE
JOB NO: A379–001
DGN BY: JMS
DWN BY: MAA
RVW BY: JMS

STATE OF TEXAS
JAMES M. SCHISSLER
82472
10-21-19
LICENSED PROFESSIONAL ENGINEER

SITE PLAN APPROVAL SHEET 12 OF 18
FILE NUMBER: SP-2019-0465C APPLICATION DATE: 10-21-2019
APPROVED BY COMMISSION ON _____ UNDER SECTION 112 ON
CHAPTER 25-5 OF THE CITY OF AUSTIN CODE
EXPIRATION DATE (25–5–81, LDC)_____ CASE MANAGER JEREMY SALTILA
PROJECT EXPIRATION DATE (ORD.#970905–A)_____ DWPZ _____ DDZ _____

Director, DEVELOPMENT SERVICES DEPARTMENT
RELEASED FOR GENERAL COMPLIANCE: _____ ZONING: CBD
Rev. 1 _____ Correction 1 _____
Rev. 2 _____ Correction 2 _____
Rev. 3 _____ Correction 3 _____

Final plat must be recorded by the Project Expiration Date, if applicable. Subsequent Site Plans which do not comply with the Code current at the time of filing, and all required Building Permits and/or a notice of construction (if a Building permit is not required), must also be approved prior to the Project Expiration Date.

SHEET NO. 12 OF 18

RIVER STREET HOTEL & HOMES – 60 EAST AVE, AUSTIN, TX 78701

SP–2019–0465C

P:\A379 60 East Avenue\Civil\Construction Drawings\Sheets\12 CIVIL DETAILS.dwg

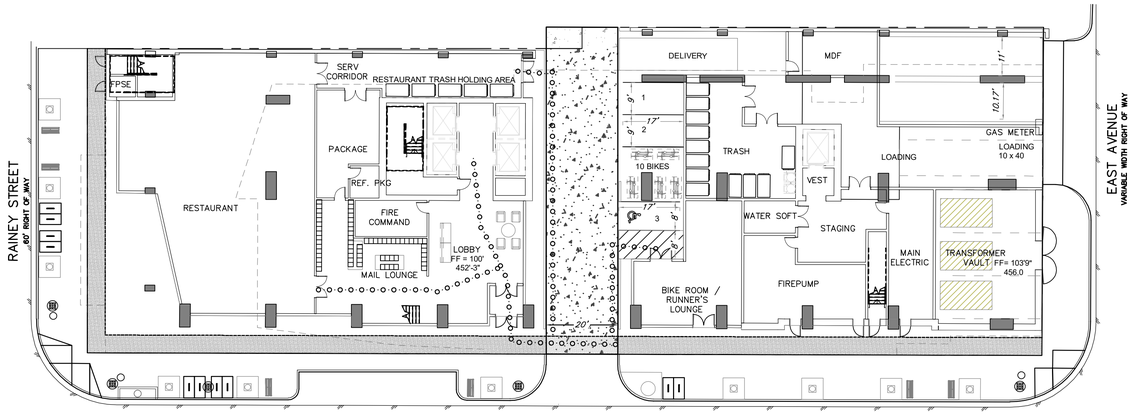

GROUND FLOOR
TOTAL PARKING=3

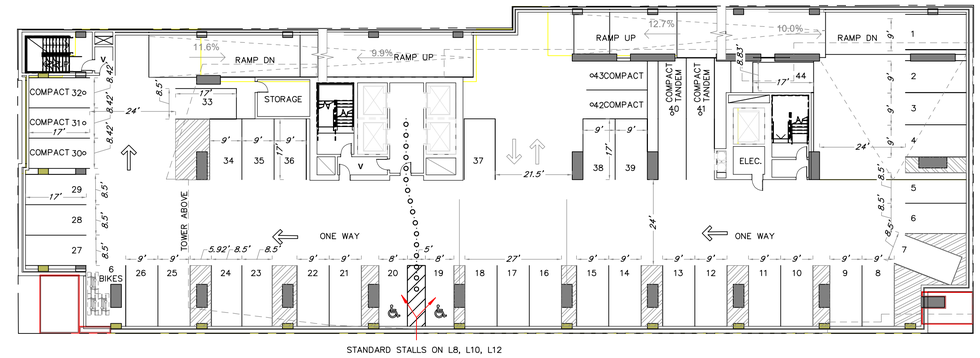

LEVEL 4,6,8,10,12
TOTAL PARKING=44X5=220

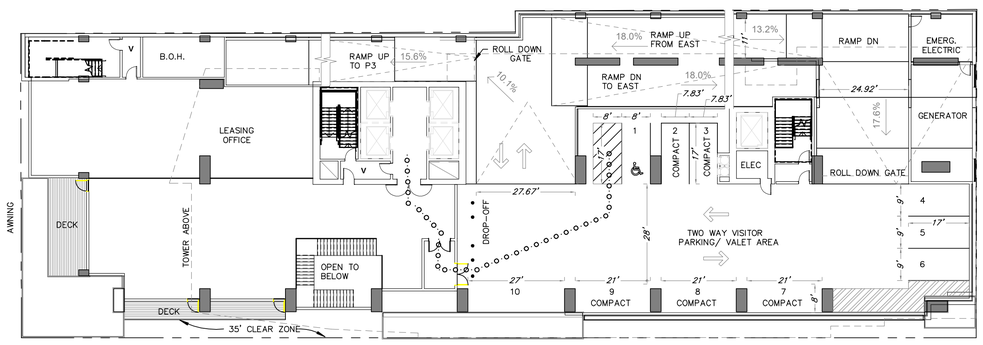

LEVEL 2
TOTAL PARKING=10

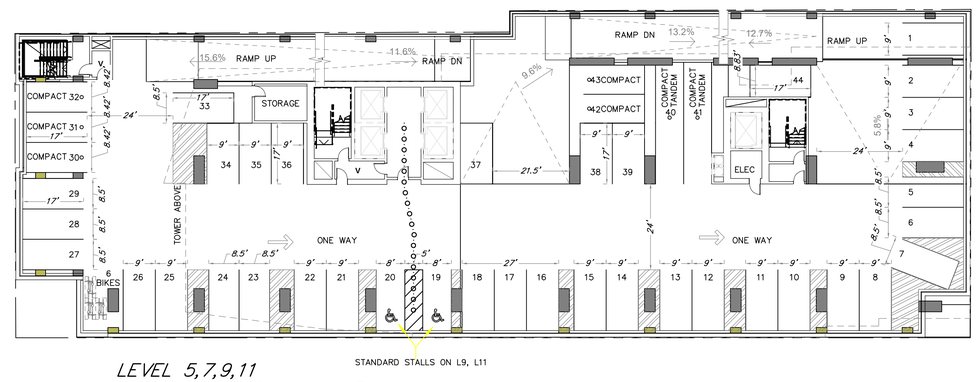

LEVEL 5,7,9,11
TOTAL PARKING=44X4=176

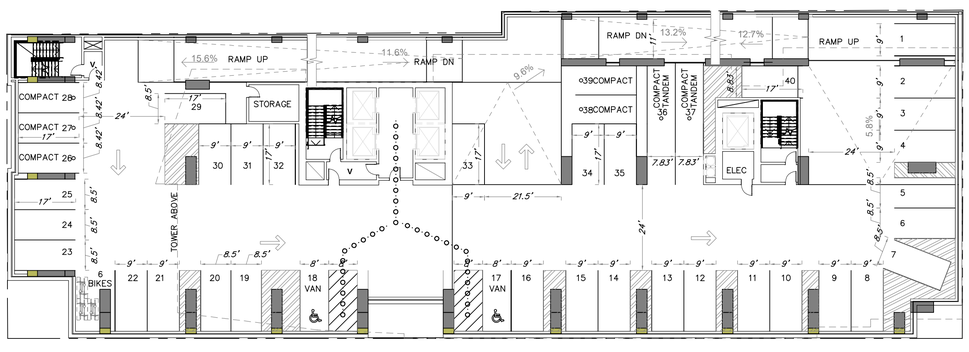

LEVEL 3
TOTAL PARKING=40

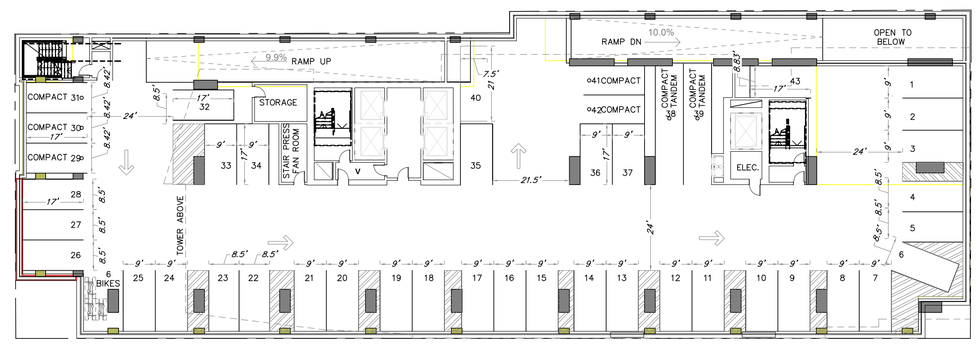

LEVEL 13
TOTAL PARKING=43

NOTES:

1. A MINIMUM VERTICAL CLEARANCE OF 98" MUST BE PROVIDED FOR VAN ACCESSIBLE PARKING SPOTS AND ALONG THE VEHICULAR ROUTE THERETO.
2. EACH COMPACT SPACE WILL BE SIGNED "SMALL CAR ONLY"
3. FOUR CAR-SHARE SPACES ARE PROVIDED.
4. PROVIDE BIKE REPAIR STATION AND MINIMUM OF THREE BIKE TRAILERS IN THE BIKE STORAGE ROOM.

0' 10' 20' 40'
SCALE:1"=20'

PARKING COUNT					
LEVEL	S	C	P	A	TOTAL
1	2	0	0	1	3
2	3	2	4	1	10
3	31	7	0	2	40
4	35	7	0	2	44
5	35	7	0	2	44
6	35	7	0	2	44
7	35	7	0	2	44
8	35	7	0	2	44
9	35	7	0	2	44
10	35	7	0	2	44
11	35	7	0	2	44
12	35	7	0	2	44
13	35	7	1	0	43
TOTAL	386	79	5	22	492
S:	STANDARD				
C:	COMPACT				
P:	PARALLEL				
A:	ADA				

NO.	DATE	REVISIONS	SHEET

THE LOCATION OF EXISTING UNDERGROUND UTILITIES ARE SHOWN IN AN APPROXIMATE WAY ONLY. THE CONTRACTOR SHALL DETERMINE THE EXACT LOCATION OF ALL EXISTING UTILITIES BEFORE COMMENCING WORK. HE AGREES TO BE FULLY RESPONSIBLE FOR ANY AND ALL DAMAGES WHICH MIGHT BE OCCASIONED BY HIS FAILURE TO EXACTLY LOCATE AND PRESERVE ANY AND ALL UNDERGROUND UTILITIES.

RIVER STREET HOTEL & HOMES
60 EAST AVENUE, AUSTIN, TX 78701

GARAGE LAYOUT

CIVILITUDE
ENGINEERS & PLANNERS
5110 LANCASTER COURT, AUSTIN, TX 78723 FIRM REG # F12469
PHONE 512 761 6161 FAX 512 761 6167 INFO@CIVILITUDE.COM

SCALE:
JOB NO: A379-001
DGN BY: JMS
DWN BY: MAA
RVW BY: JMS

SITE PLAN APPROVAL SHEET 13 OF 18
FILE NUMBER: SP-2019-0465C APPLICATION DATE: 10-21-2019
APPROVED BY COMMISSION ON _____ UNDER SECTION 112 ON
CHAPTER 25-5 OF THE CITY OF AUSTIN CODE
EXPIRATION DATE (25-5-81, LDC)_____ CASE MANAGER JEREMY SALTILA
PROJECT EXPIRATION DATE (ORD.#970905-A)_____ DWPZ _____ DDZ _____

Director, DEVELOPMENT SERVICES DEPARTMENT
RELEASED FOR GENERAL COMPLIANCE: _____ ZONING: CBD
Rev. 1_____ Correction 1_____
Rev. 2_____ Correction 2_____
Rev. 3_____ Correction 3_____

Final plat must be recorded by the Project Expiration Date, if applicable. Subsequent Site Plans which do not comply with the Code current at the time of filing, and all required Building Permits and/or a notice of construction (if a Building permit is not required), must also be approved prior to the Project Expiration Date.

SHEET NO. 13 OF 18

RIVER STREET HOTEL & HOMES – 60 EAST AVE, AUSTIN, TX 78701

SP-2019-0465C

C:\Users\P71-2\Civilitude Dropbox\Civilitude LLC\Projects\A379 60 East Avenue\Civil\Construction Drawings\Sheets\13 GARAGE PLANS.dwg

1311 South Lamar Blvd- Tree Mitigation Calculations

Existing Tree Survey						Trees To Be Removed									
						Heritage Trees		Tree Type Categories- ECM 3.5.1 (A)(2)							
Tag #	Species	Apdx. F	Off Site	Multi Trunk	Total Cal. Inches	30" Heritage	24-29.9" Heritage	19"+ ECM Apdx. F	8-18.9" ECM Apdx. F	19"+ all other Trees	8-18.9" all other Trees	Trees in Fair Condition	Trees in Poor Condition	ROW Trees	Dead
2098	HACKBERRY	15			15				15						
2099	HACKBERRY	13			13				13						
2100	HACKBERRY	14			14				14						
50190	ASH				21					21					
50222	COTTON WOOD	22			22			22							
50243	COTTON WOOD	20			20			20							
50320	PECAN	16			16				16						
50327	PECAN	12			12				12						
50346	HACKBERRY	20	Y		20							20			
50456	CEDAR ELM	9	Y		9										
50457	CEDAR ELM	7	Y		7										
50589	HACKBERRY	13	Y		13							13			
50594	AMERICAN ELM	10	Y		10							10			
50614	PECAN (H)	37	Y		37										
Total Caliper Inch Per Column:						0	0	42	70	21	0	43	0	0	0
Total Caliper Inch Removed:						176									
Mitigation Rates per ECM 3.5.4:															
Mitigation Percentage:						300%	300%	100%	50%	50%	25%	20%	0%	100%	0%
Total Replacement Inches per Column:						0	0	42	35	10.5	0	8.6	0	0	0
Total Replacement Caliper Inches:						87.5									

Urban Forest Accounting Calculations	
Total Caliper Inches Surveyed:	229
Total ECM Apdx. F Inches Surveyed:	208
Total ECM Apdx. F Inches Removed:	112
Total Non- Apdx. F Inches Removed:	21
Total Caliper Inches- Trees Removed	0
Heritage Trees- 30"+	0
Heritage Tress- 24-29.9"	0
19"+, ECM Apdx. F	42
8-18.9" ECM Apdx. F	70
ROW Trees Removed	0
8-18.9" all other Trees	21
Trees in 'Fair' Condition	43
Trees in 'Poor' Condition	0
Invasives	0
Dead	0
Total Caliper Inches Removed:	176
Total Replacement Caliper Inches	**87.5**

Soil Cell / Structural Paving Cost			
Street / ROW	**Area (SF)**	**Cost (SF)**	**Total**
Rainey			
River			
Grand Total			

Design Proposes 800* Cubic Feet of Soil Per Tree Minimum
*Assumes 30% Shared Soil Volume within 150% of Critical Root Zone

Soil Cell In Lieu of Tree Fund Fee	
Total Cost of Tree Mitigation	
Estimated Cost of Soil Cells	
Total Surplus	

Tree Mitigation Fee Calculations	
Total Cal. Inches Removed	176
Replacement Inches Required	88
Replacement Inches Provided	51
Replacement Inches Lacking	37
Cost Per Inch	$200.00
Grand Total	***$7,400.00***

DOCUMENT NOTES

GENERAL NOTES:
1. The location of existing underground utilities are shown in an approximate way only. The contractor shall determine the exact location of all existing utilities before commencing work. The contractor agrees to be fully responsible for any and all damages which might be occasioned by failure to exactly locate and preserve any and all underground utilities.
2. Call Texas 811 for utility location services.
3. Project Manual(s) and related specifications apply to these documents. These documents should be referenced by all associated contractors or bidders, and will provide supplemental detail for many aspects of the work herein.
4. If establishing vegetation during any stage of drought, section 6-4-30 may require a variance. Contact Austin Water Conservation staff at waterusecompvar@austintexas.gov or call (512) 974-2199.
5. The owner will continuously maintain the required landscaping in accordance with LDC 25-2-984.
6. All landscaped areas are to be protected by 6 inch wheel curbs, wheelstops or other approved barriers as per ECM 2.4.7.

LANDSCAPE NOTES:
1. A minimum of 6" permeable soil (native or imported material that meets COA specification 601S) shall be installed for all turf or planted areas.
2. All proposed landscape areas adjacent to vehicular uses shall be protected by a minimum 6" height curb, wheel stop, or other approved barrier per ECM 2.4.7.
3. The Owner shall continuously maintain required landscape features in accordance with LDC section 25-2-984.
4. Proof of final Inspection fee payment will be required prior to final approval of this site plan by ECSD.
5. All street furnishings will comply with COA Great Streets requirements.
6. All pavers set on sand or aggregate base materials (non-grouted or mortared) shall be patterned perpendicular to street curb line.
7. Project Manual(s) and related specifications apply to these documents. These documents should be referenced by all associated contractors or bidders, and will provide supplemental detail for many aspects of the work herein.

IRRIGATION SYSTEM NOTES:
1. All proposed landscape areas within property line to receive 100% head-to-head irrigation coverage. This system will include separated turf and planting zones, and will comply with water conservation irrigation system requirements as required in the ECM.
2. Irrigation lines shall be trenched to avoid disturbance of existing tree critical root zones.
3. Irrigation systems shall be in place and functional at landscape inspection.
4. If establishing vegetation during any stage of a drought, Section 6-4-30 may require a variance. Contact Austin Water Conservation staff at waterusecompvar@austintexas.gov or call (512) 974-2199.
5. [Appendix O requirements] Automatic irrigation systems shall comply with TCEQ Chapter 344, as well as the following requirements:
   a. These requirements shall be noted on the Site Development Permit and shall be implemented as part of the landscape inspection:
   - the system must provide a moisture level adequate to sustain growth of the plant materials;
   - the system does not include spray irrigation on areas less than ten (10) feet wide (such as medians, buffer strips, and parking lot islands);
   - circuit remote control valves have adjustable flow controls;
   - serviceable in-head check valves area adjacent to paved areas where elevation differences may cause low head drainage;
   - a master valve installed on the discharge side of the backflow preventer;
   - above-ground irrigation emission devices are set back at least six (6) inches from impervious surfaces;
   - an automatic rain shut-off device shuts off the irrigation system automatically after more than a one-half inch (½") rainfall; and
   - newly planted trees shall have permanent irrigation consisting of drip or bubblers.

   b. The irrigation installer shall develop and provide an as-built design plan to the City at the time the final irrigation inspection is performed;
   - unless fiscal security is provided to the City for the installation of the system, it must be operational at the time of the final landscape inspection.

   c. The irrigation installer shall also provide exhibits to be permanently installed inside or attached to the irrigation controller, including:
   - a laminated copy of the water budget containing zone numbers, precipitation rate, gallons per minute and the location of the isolation valve; and an as built plan.

   d. The irrigation installer shall provide a report to the City on a form provided by Austin Water certifying compliance with Subsection 1. When the final plumbing inspection is performed by the City.

I, BRIAN OTT, A REGISTERED LANDSCAPE ARCHITECT NO. 1890 WITH THE STATE OF TEXAS, CERTIFY THAT THESE PLANS MEET THE MINIMUM REQUIREMENTS OF CHAPTER 25-2, ARTICLE 9 OF THE LAND DEVELOPMENT CODE OF THE CITY OF AUSTIN.

ALL RESPONSIBILITY FOR THE ADEQUACY OF THESE PLANS REMAINS WITH THE LANDSCAPE ARCHITECT WHO PREPARED THEM. IN APPROVING THESE PLANS, THE CITY OF AUSTIN MUST RELY UPON ADEQUACY OF THE WORK OF THE LANDSCAPE ARCHITECT.

THE TEXAS BOARD OF ARCHITECTURAL EXAMINERS, P.O. BOX 12337, AUSTIN, TEXAS 78711-2337, TELEPHONE (512) 305-9000, HAS JURISDICTION OVER INDIVIDUALS LICENSED UNDER THE LANDSCAPE ARCHITECTS REGISTRATION LAW ARTICLE 249c, VERNON'S TEXAS CIVIL STATUTES.

September 13, 2018

BRIAN OTT, LANDSCAPE ARCHITECT, STATE OF TEXAS NO. 1890

nudge design
www.nudgedesign.com

REGISTERED LANDSCAPE ARCHITECT
BRIAN OTT
1890
STATE OF TEXAS
09 . 13 . 2019

EXISTING LEGEND

FIRE HYDRANT W/ GATE VALVE
WATERLINE W/ GATE VALVE
WATERLINE W/ DOUBLE SERVICE
WATERLINE W/ SINGLE SERVICE
WASTEWATER W/ MANHOLE
WASTEWATER W/ CLEANOUT
WASTEWATER W/ DOUBLE SERVICE
WASTEWATER W/ SINGLE SERVICE
STORM SEWER W/ MANHOLE
STORM SEWER W/ CURB INLET
700 GROUND CONTOUR

PROPOSED LEGEND

FIRE HYDRANT W/ GATE VALVE
WATERLINE W/ GATE VALVE
WATERLINE W/ DOUBLE SERVICE
WATERLINE W/ SINGLE SERVICE
WASTEWATER W/ MANHOLE
WASTEWATER W/ CLEANOUT
WASTEWATER W/ STACK
WASTEWATER W/ DOUBLE SERVICE
WASTEWATER W/ SINGLE SERVICE
STORM SEWER W/ MANHOLE
STORM SEWER W/ CURB INLET
700 GROUND CONTOUR
ELECTRIC LINE
G GAS LINE

NO.	DATE	REVISIONS	SHEET

THE LOCATION OF EXISTING UNDERGROUND UTILITIES ARE SHOWN IN AN APPROXIMATE WAY ONLY. THE CONTRACTOR SHALL DETERMINE THE EXACT LOCATION OF ALL EXISTING UTILITIES BEFORE COMMENCING WORK. HE AGREES TO BE FULLY RESPONSIBLE FOR ANY AND ALL DAMAGES WHICH MIGHT BE OCCASONED BY HIS FAILURE TO EXACTLY LOCATE AND PRESERVE ANY AND ALL UNDERGROUND UTILITIES.

RIVER STREET HOTEL & HOMES
60 EAST AVENUE, AUSTIN, TX 78701

LANDSCAPE CALCULATIONS AND NOTES

SDP 1.1

CIVILITUDE
ENGINEERS & PLANNERS
5110 LANCASTER COURT, AUSTIN, TX 78723 FIRM REG # F12469
PHONE 512 761 6161 FAX 512 761 6167 INFO@CIVILITUDE.COM

SCALE:
JOB NO: A379-001
DGN BY: JMS
DWN BY: MAA
RVW BY: JMS

SITE PLAN APPROVAL SHEET ___ OF 18
FILE NUMBER: SP-2019-0465C APPLICATION DATE: 10-21-2019
APPROVED BY COMMISSION ON ___ UNDER SECTION 112 ON
CHAPTER 25-5 OF THE CITY OF AUSTIN CODE
EXPIRATION DATE (25-5-81, LDC) ___ CASE MANAGER JEREMY SALTILA
PROJECT EXPIRATION DATE (ORD.#970905-A) ___ DWPZ ___ DDZ ___

Director, DEVELOPMENT SERVICES DEPARTMENT
RELEASED FOR GENERAL COMPLIANCE: ___ ZONING: CBD
Rev. 1 ___ Correction 1 ___
Rev. 2 ___ Correction 2 ___
Rev. 3 ___ Correction 3 ___

Final plat must be recorded by the Project Expiration Date, if applicable. Subsequent Site Plans which do not comply with the Code current at the time of filing, and all required Building Permits and/or a notice of construction (if a Building permit is not required), must also be approved prior to the Project Expiration Date.

SHEET NO. 14 OF 18

RIVER STREET HOTEL & HOMES – 60 EAST AVE, AUSTIN, TX 78701

SP-2019-0465C

NOTES

1. Refer to SDP 1.1 for all general notes.
2. Refer to SDP 2.2 for all dimension control and SDP 2.3 for all plant and tree types.
3. "P.A." refers to planting/softscape areas.
4. "EJ" refers to sidewalk expansion joints conforming to details within this document.

REQUIRED SITE FURNISHING

All furnishing elements provided on site are required for Great Streets design standards. All site furnishing meets requirements for product specification and dimensioning in accordance with great streets design standards.

REQUIRED TREE PLANTING

All trees planted on site are required for Great Streets design standards. All great streets trees are labeled with "GS" near the center of each tree symbol. All GS trees are required to be installed at a size of five (5) caliper inches per tree.

TREE PLANTING TOTALS:

Qnty.	*Species*
3	Texas Red Oak (*Quercus buckleyi*)
6	Cedar Elm (*Ulmus crassifolia*)
3	Desert Willow (*Chilopsis linearis*)

Texas Red Oak (*Quercus buckleyi*)
5" Cal.

Cedar Elm (*Ulmus crassifolia*)
5" Cal.

Desert Willow (*Ulmus crassifolia*)
2" Cal.

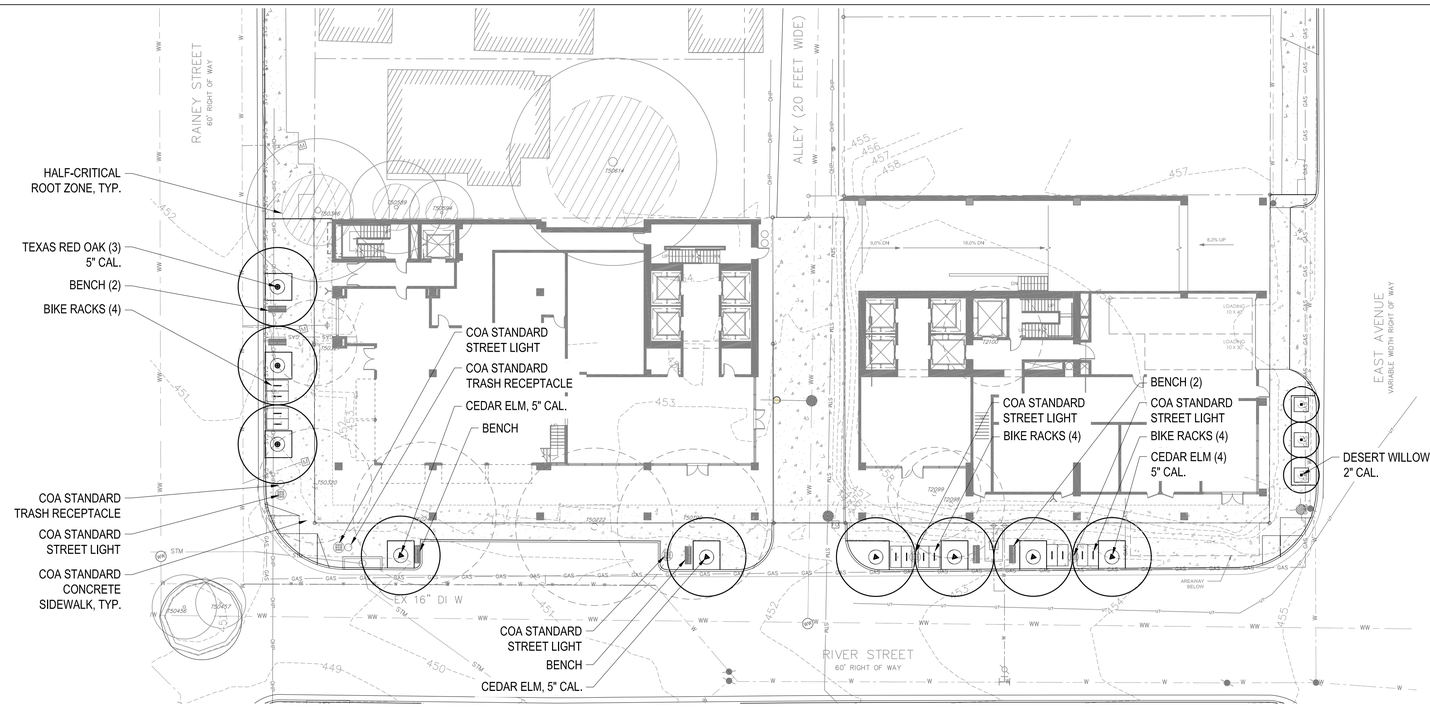

1 LANDSCAPE PLAN
PLAN

SCALE: 1"=20'

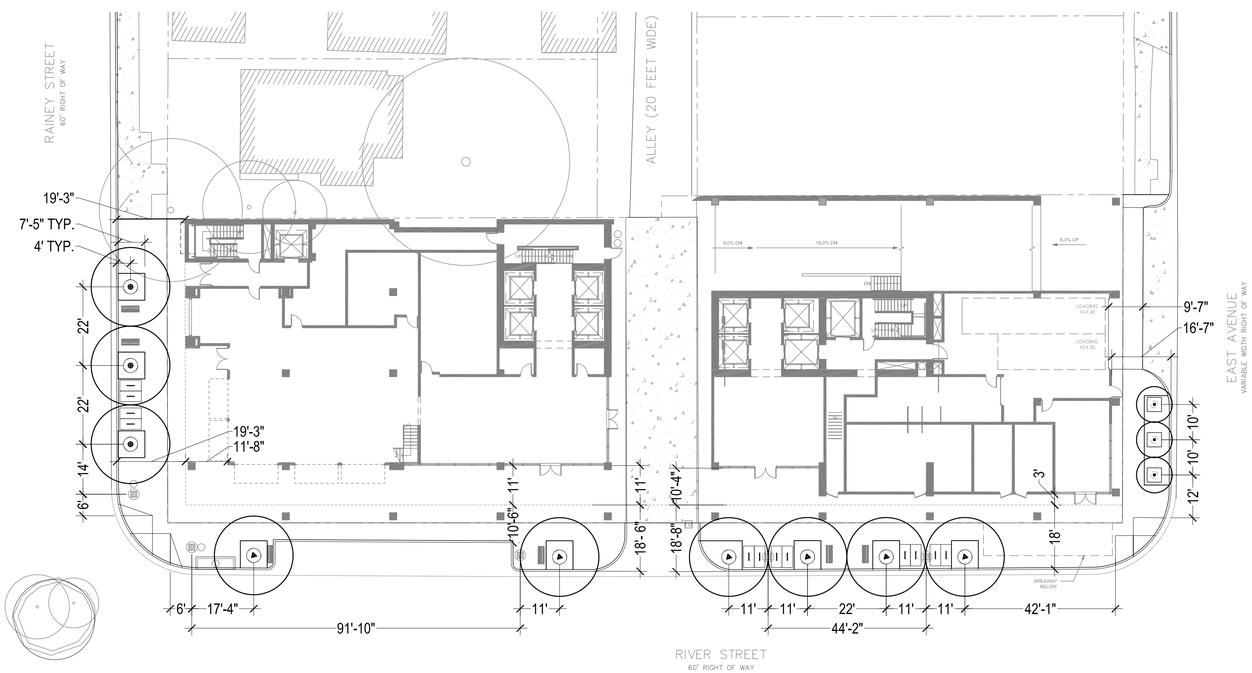

2 LANDSCAPE DIMENSIONING
PLAN

SCALE: 1"=20'

nudge design
www.nudgedesign.com

REGISTERED LANDSCAPE ARCHITECT
BRIAN OTT
STATE OF TEXAS

09 . 13 . 2019

EXISTING LEGEND

- FIRE HYDRANT W/ GATE VALVE
- WATERLINE W/ GATE VALVE
- WATERLINE W/ DOUBLE SERVICE
- WATERLINE W/ SINGLE SERVICE
- WASTEWATER W/ MANHOLE
- WASTEWATER W/ CLEANOUT
- WASTEWATER W/ DOUBLE SERVICE
- WASTEWATER W/ SINGLE SERVICE
- STORM SEWER W/ MANHOLE
- STORM SEWER W/ CURB INLET
- 700 GROUND CONTOUR

PROPOSED LEGEND

- FIRE HYDRANT W/ GATE VALVE
- WATERLINE W/ GATE VALVE
- WATERLINE W/ DOUBLE SERVICE
- WATERLINE W/ SINGLE SERVICE
- WASTEWATER W/ MANHOLE
- WASTEWATER W/ CLEANOUT
- WASTEWATER W/ STACK
- WASTEWATER W/ DOUBLE SERVICE
- WASTEWATER W/ SINGLE SERVICE
- STORM SEWER W/ MANHOLE
- STORM SEWER W/ CURB INLET
- 700 GROUND CONTOUR
- ELECTRIC LINE
- G GAS LINE

NO.	DATE	REVISIONS	SHEET

THE LOCATION OF EXISTING UNDERGROUND UTILITIES ARE SHOWN IN AN APPROXIMATE WAY ONLY. THE CONTRACTOR SHALL DETERMINE THE EXACT LOCATION OF ALL EXISTING UTILITIES BEFORE COMMENCING WORK. HE AGREES TO BE FULLY RESPONSIBLE FOR ANY AND ALL DAMAGES WHICH MIGHT BE OCCASIONED BY HIS FAILURE TO EXACTLY LOCATE AND PRESERVE ANY AND ALL UNDERGROUND UTILITIES.

RIVER STREET HOTEL & HOMES
60 EAST AVENUE, AUSTIN, TX 78701

LANDSCAPE PLAN
SDP 1.2

CIVILITUDE
ENGINEERS & PLANNERS
5110 LANCASTER COURT, AUSTIN, TX 78723 FIRM REG # F12469
PHONE 512 761 6161 FAX 512 761 6167 INFO@CIVILITUDE.COM

SCALE: _____
JOB NO: A379-001
DGN BY: JMS
DWN BY: MAA
RVW BY: JMS

SITE PLAN APPROVAL SHEET ____ OF 18
FILE NUMBER: SP-2019-0465C APPLICATION DATE: 10-21-2019
APPROVED BY COMMISSION ON _____ UNDER SECTION 112 ON
CHAPTER 25-5 OF THE CITY OF AUSTIN CODE
EXPIRATION DATE (25-5-81, LDC)_____ CASE MANAGER JEREMY SALTILA
PROJECT EXPIRATION DATE (ORD.#970905-A)_____ DWPZ ____ DDZ ____

Director, DEVELOPMENT SERVICES DEPARTMENT
RELEASED FOR GENERAL COMPLIANCE: _____ ZONING: CBD
Rev. 1 _____ Correction 1 _____
Rev. 2 _____ Correction 2 _____
Rev. 3 _____ Correction 3 _____

Final plat must be recorded by the Project Expiration Date, if applicable. Subsequent Site Plans which do not comply with the Code current at the time of filing, and all required Building Permits and/or a notice of construction (if a Building permit is not required), must also be approved prior to the Project Expiration Date.

SHEET NO. 15 OF 18

RIVER STREET HOTEL & HOMES – 60 EAST AVE, AUSTIN, TX 78701

SP-2019-0465C

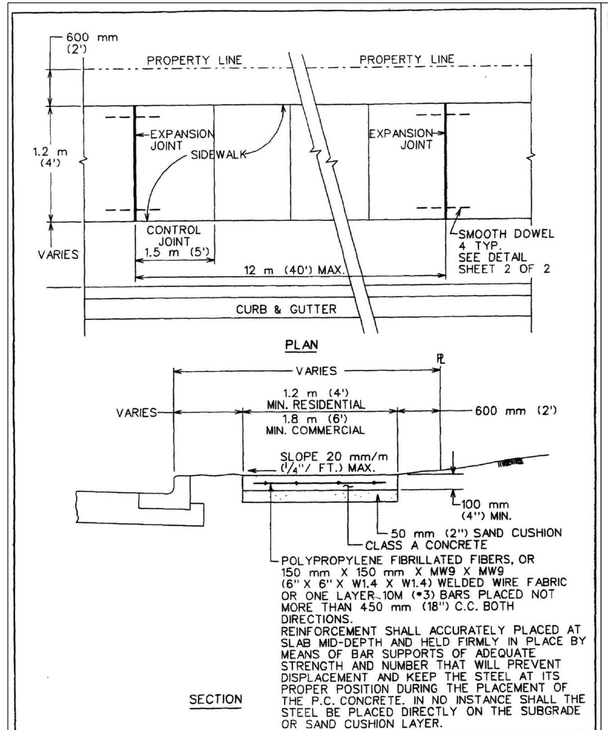

CITY OF AUSTIN DEPARTMENT OF PUBLIC WORKS	SIDEWALK	
3/26/08 ADOPTED	THE ARCHITECT/ENGINEER ASSUMES RESPONSIBILITY FOR APPROPRIATE USE OF THIS STANDARD.	STANDARD NO. 432S-1 1 OF 3

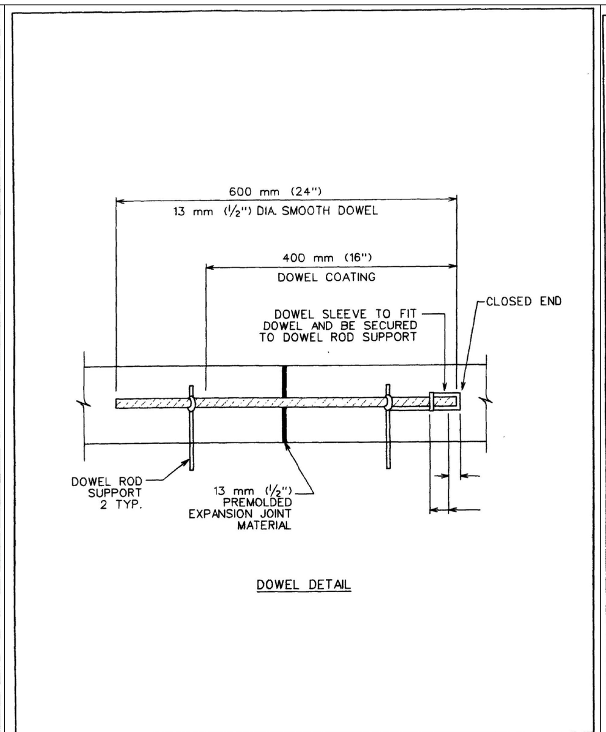

CITY OF AUSTIN DEPARTMENT OF PUBLIC WORKS	SIDEWALK	
3/26/08 ADOPTED	THE ARCHITECT/ENGINEER ASSUMES RESPONSIBILITY FOR APPROPRIATE USE OF THIS STANDARD.	STANDARD NO. 432S-1 2 OF 3

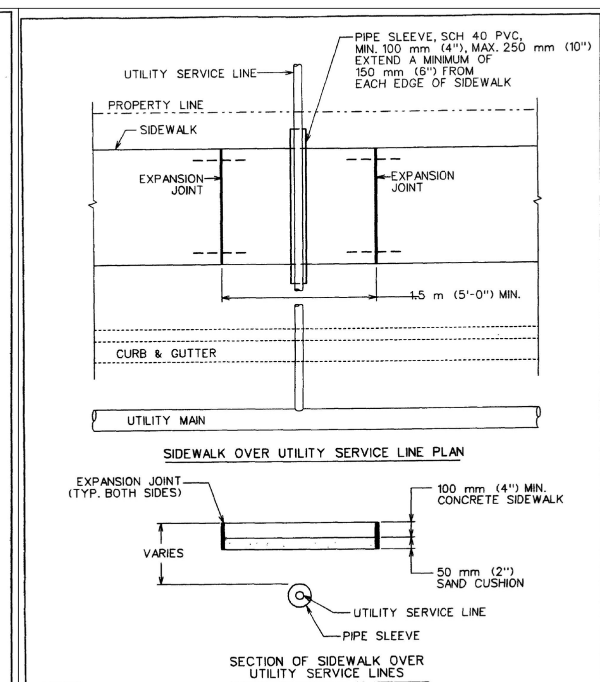

NOTES:
1. THIS STANDARD APPLIES TO THE INSTALLATION OF NEW UTILITIES OR UTILITIES BEING REPLACED BY A NEW LINE.
2. NO JOINTS IN UTILITY SERVICE PIPE TO BE LOCATED INSIDE PVC PIPE SLEEVE.

CITY OF AUSTIN DEPARTMENT OF PUBLIC WORKS	SIDEWALK	
3/26/08 ADOPTED	THE ARCHITECT/ENGINEER ASSUMES RESPONSIBILITY FOR APPROPRIATE USE OF THIS STANDARD.	STANDARD NO. 432S-1 3 OF 3

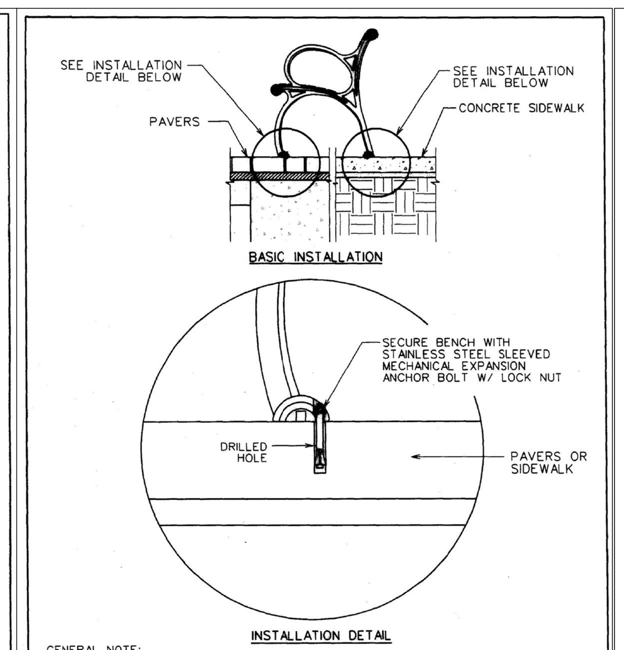

GENERAL NOTE:
BENCHES SHALL BE LOCATED WITHIN 7.32 m (24') OF EITHER THE MAIN BUILDING ENTRY OR THE ENTRY TO THE PRIMARY LOCAL USE. BENCHES SHALL BE PLACED EITHER PERPENDICULAR TO THE CURB WITH THE CENTER OF THE BENCH ON LINE WITH TREES AND LIGHT POLES AND FACING TOWARD THE BUILDING ENTRY, OR PARALLEL TO THE BUILDING AND WITHIN 150 mm (6") OF THE BUILDING WALL, FACING OUT TO THE STREET.

CITY OF AUSTIN DEPARTMENT OF PUBLIC WORKS	BENCH/CHAIR INSTALLATION IN SIDEWALKS	
11/21/05 ADOPTED	THE ARCHITECT/ENGINEER ASSUMES RESPONSIBILITY FOR APPROPRIATE USE OF THIS STANDARD.	STANDARD NO. 432S-9B

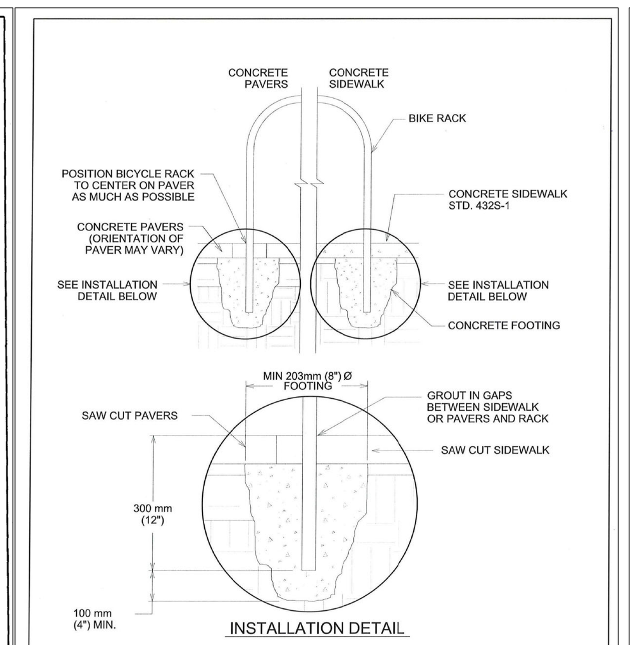

GENERAL NOTES:
1. RACKS SHALL COMPLY WITH CITY STANDARD DETAIL 710S-1 OR 710S-2.
2. RACK PLACEMENT SHALL COMPLY WITH APPLICABLE CITY STANDARD DETAILS 710S-6A, 710S-6B, OR 710S-6C AND IN COMPLIANCE WITH CITY OF AUSTIN CODE SECTION 25-6-477 OR ITS SUCCESSOR.

CITY OF AUSTIN DEPARTMENT OF PUBLIC WORKS	BICYCLE RACK INSTALLATION IN SIDEWALKS-ALTERNATE 2	
7/26/12 ADOPTED	THE ARCHITECT/ENGINEER ASSUMES RESPONSIBILITY FOR APPROPRIATE USE OF THIS STANDARD.	STANDARD NO. 710S-5 1 OF 1

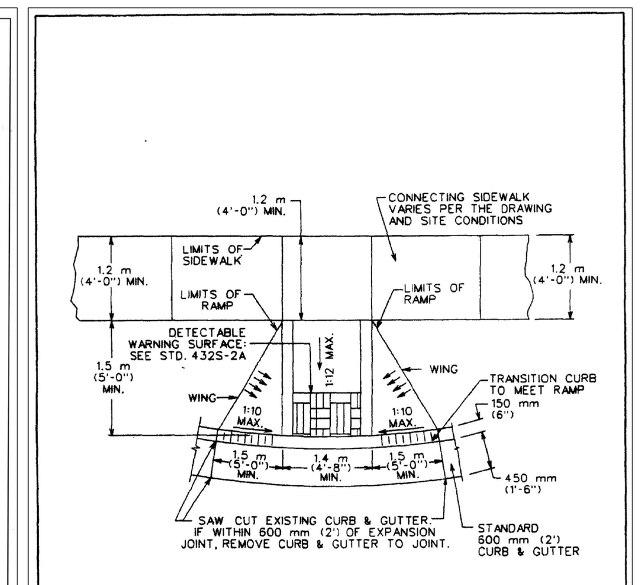

CITY OF AUSTIN DEPARTMENT OF PUBLIC WORKS	TYPE 1 SIDEWALK CURB RAMP	
9/14/05 ADOPTED	THE ARCHITECT/ENGINEER ASSUMES RESPONSIBILITY FOR APPROPRIATE USE OF THIS STANDARD.	STANDARD NO. 432S-5

NOTES:
1. TREE PLANTINGS ARE NOT ALLOWED IN SIDEWALKS LESS THAN 3.6 m (12') IN WIDTH AS PER TRANSPORTATION CRITERIA MANUAL SECTIONS 6.2.3.A.1 AND 6.2.3.A.2.
2. TREE WELLS SHALL NOT CONFLICT WITH EXISTING OR PROPOSED WATER OR WASTEWATER LINES AND SHALL NOT BE INSTALLED WITHIN A MINIMUM HORIZONTAL DISTANCE OF 900mm (36") FROM THE OUTSIDE OF ANY PUBLIC OR PRIVATE UTILITY LINE OR APPURTENANCE.

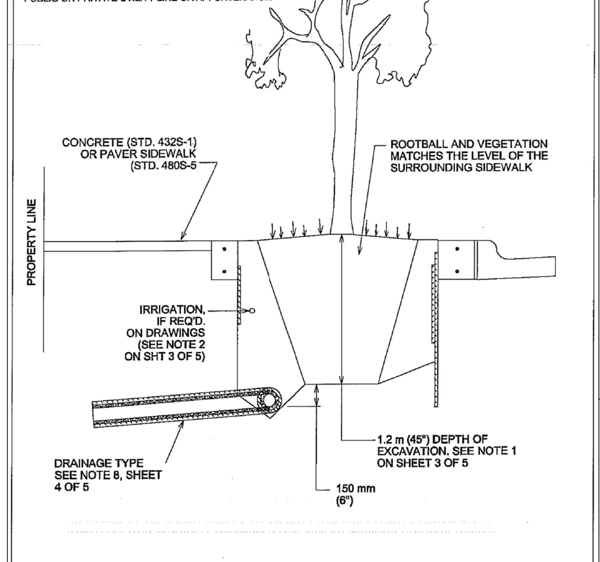

CITY OF AUSTIN DEPARTMENT OF PUBLIC WORKS	TREE WELL WITHOUT GRATE	
1/4/10 ADOPTED	THE ARCHITECT/ENGINEER ASSUMES RESPONSIBILITY FOR APPROPRIATE USE OF THIS STANDARD.	STANDARD NO. 432S-7F 1 of 5

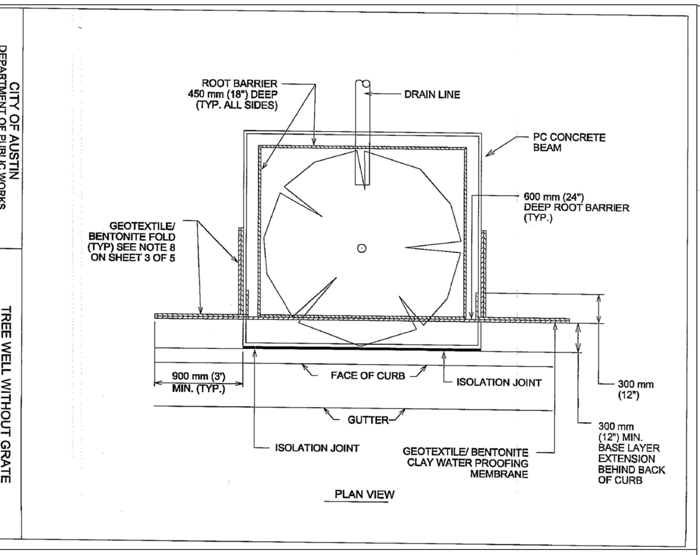

CITY OF AUSTIN DEPARTMENT OF PUBLIC WORKS	TREE WELL WITHOUT GRATE	
1/4/10 ADOPTED	THE ARCHITECT/ENGINEER ASSUMES RESPONSIBILITY FOR APPROPRIATE USE OF THIS STANDARD.	STANDARD NO. 432S-7F 2 of 5

NOTES:

1. THE MINIMUM OFFSET DISTANCE SHALL BE INCREASED UNIFORMLY WHEN THE DEPTH OF EXCAVATION EXCEEDS 1.14 m (45") AS FOLLOWS:

EXCAVATION DEPTH	MINIMUM OFFSET DISTANCE
1.1 m (45") OR LESS	1.2 m (4')
1.3 m (51")	1.4 m (4'-6")
1.5 m (57")	1.5 m (5')
1.6 m (63")	1.7 m (5'-6")
1.7 m (69") OR GREATER	1.8 m (6')

2. IRRIGATION SHALL COMPLY WITH REQUIREMENTS IN THE LAND DEVELOPMENT CODE SECTION 25-2-1008 AND ENVIRONMENTAL CRITERIA MANUAL SECTIONS 2,4,6 AND 2.7.2.G.
3. LIGHTING AND ASSOCIATED ELECTRICAL INSTALLATIONS SHALL BE IN ACCORDANCE WITH THE DRAWINGS.
4. TREE WELL EXCAVATIONS SHALL BE INSTALLED NO CLOSER THAN 3 m (10') TO CONTIGUOUS PROPERTY CORNERS.
5. SHOULD MAINTENANCE OF WATER, WASTEWATER SERVICES OR FIRE LINES BE NECESSARY, LICENSE HOLDERS ARE RESPONSIBLE FOR MAINTENANCE OR REPLACEMENT OF GEOTEXTILE OR BENTONITE CLAY MEMBRANE.
6. TREE SPACING MUST BE SHOWN ON THE DRAWINGS.
7. ALTERNATE PLACEMENT OF GEOTEXTILE/BENTONITE FOR TREE SPACING LESS THAN 4.5m (15').
8. FOR DRAINAGE, SEE STANDARDS 432S-7A (PI >25) AND 432S-7B (PI <25) FOR DRAINAGE TYPE APPROPRIATE TO SOIL CONDITIONS.
9. THE CLEARANCE FROM TREE WITHOUT GRATE TO ANY EXISTING OR PROPOSED PUBLIC OR PRIVATE UTILITY LINE OR APPURTENANCE MUST MAINTAIN A MINIMUM HORIZONTAL CLEARANCE OF 900mm (36"). TREE WELL WITHOUT GRATE SHALL NOT BE MOUNTED ON TOP OF VAULTS OR STORM DRAIN INLETS.

CITY OF AUSTIN DEPARTMENT OF PUBLIC WORKS	TREE WELL WITHOUT GRATE	
1/4/10 ADOPTED	THE ARCHITECT/ENGINEER ASSUMES RESPONSIBILITY FOR APPROPRIATE USE OF THIS STANDARD.	STANDARD NO. 432S-7F 3 of 5

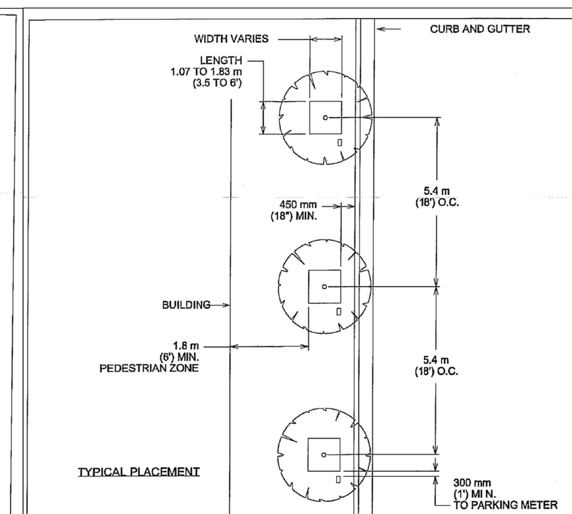

NOTES:
1. PLANTER LOCATIONS SHALL LEAVE A MINIMUM OF 1.8 m (6') WIDE CLEAR PEDESTRIAN ZONE IN THE SIDEWALK. A MINIMUM OF 450 mm (18") CLEARANCE FROM FACE OF CURB TO OUTER EDGE OF PLANTER CONTAINER SHALL BE PROVIDED (OR GREATER CLEARANCE IF REQUIRED BY THE TRANSPORTATION CRITERIA MANUAL). PLANTERS SHALL BE PLACED AT ENDS OF PARKING SPACES AS NOT TO BLOCK THE SWING OF A CAR DOOR OPENING. PLANTERS SHALL BE LOCATED AT LEAST 300 mm (1') FROM THE NEAREST PARKING METER.
2. MATERIAL OF PLANTERS AS INDICATED ON DRAWINGS.
3. DRAINAGE SHALL BE DESIGNED/CONSTRUCTED TO PROVIDE INDEPENDENT DRAINAGE OF THE SPECIFIC TREE PLANTER BY GRAVITY WITH
A) SOILS WITH P.I. > 25: PVC SCH 40 DRAIN PIPE CONNECTION TO THE STORMWATER DRAINAGE SYSTEM IN ACCORDANCE WITH THE DRAWING.
B) SOILS WITH P.I. ≤ 25: DRAINAGE CONFIGURATION IN ACCORDANCE WITH SHEET 3 OF 3. PERFORATED SCH 40 PVC DRAIN PIPE @ MINIMUM -2% GRADE.

CITY OF AUSTIN DEPARTMENT OF PUBLIC WORKS	TREE WELL WITHOUT GRATE	
1/4/10 ADOPTED	THE ARCHITECT/ENGINEER ASSUMES RESPONSIBILITY FOR APPROPRIATE USE OF THIS STANDARD.	STANDARD NO. 432S-7F 4 of 5

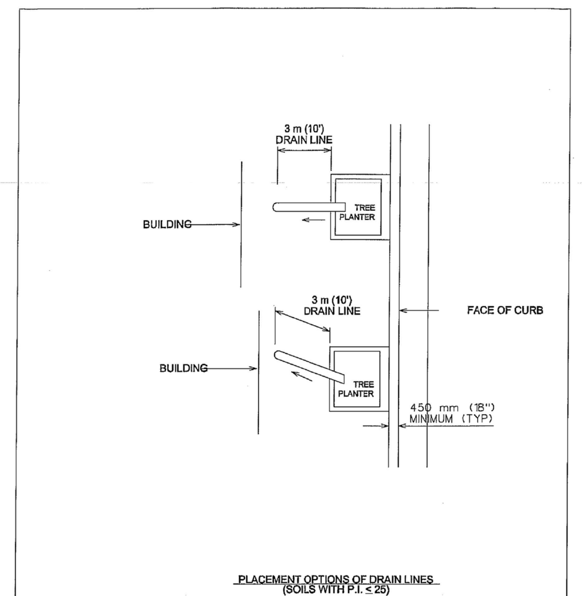

CITY OF AUSTIN DEPARTMENT OF PUBLIC WORKS	TREE WELL WITHOUT GRATE	
1/4/10 ADOPTED	THE ARCHITECT/ENGINEER ASSUMES RESPONSIBILITY FOR APPROPRIATE USE OF THIS STANDARD.	STANDARD NO. 432S-7F 5 of 5

FIGURE 3-14 TREE PLANTING DETAIL

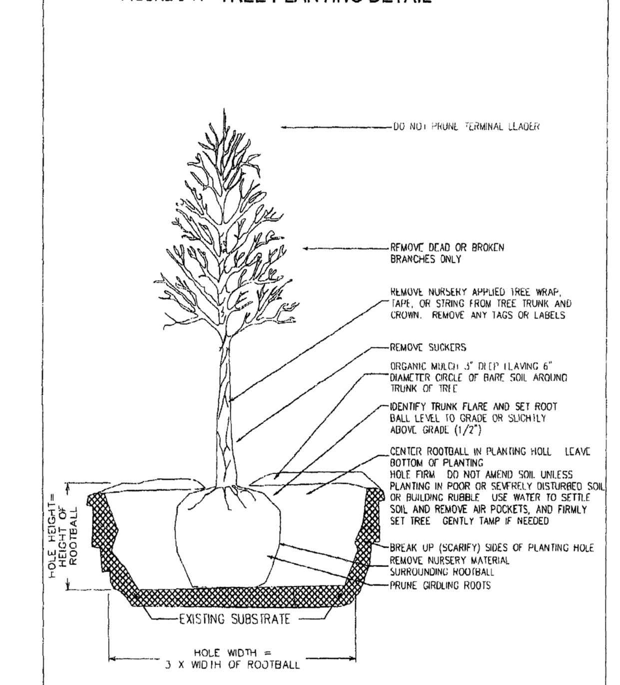

* ALTERNATIVE DETAILS CAN BE REVIEWED BY THE CITY ARBORISTS

* STAKING MAY BE USED AT THE DISCRETION OF THE APPLICANT. POST AND TIES ARE TO BE ESTABLISHED WITHOUT HARMING THE TREE (E.G. NON-BINDING STRAPS, POSTS ESTABLISHED OUTSIDE OF ROOTBALL) BUT ENSURE THAT ALL STAKING MATERIAL IS REMOVED AFTER ONE YEAR

* SEE ANSI A300 (PART 1) FOR ADDITIONAL INFORMATION REGARDING PRUNING STANDARDS

* SEE ANSI Z60.1 FOR NURSERY STOCK STANDARDS

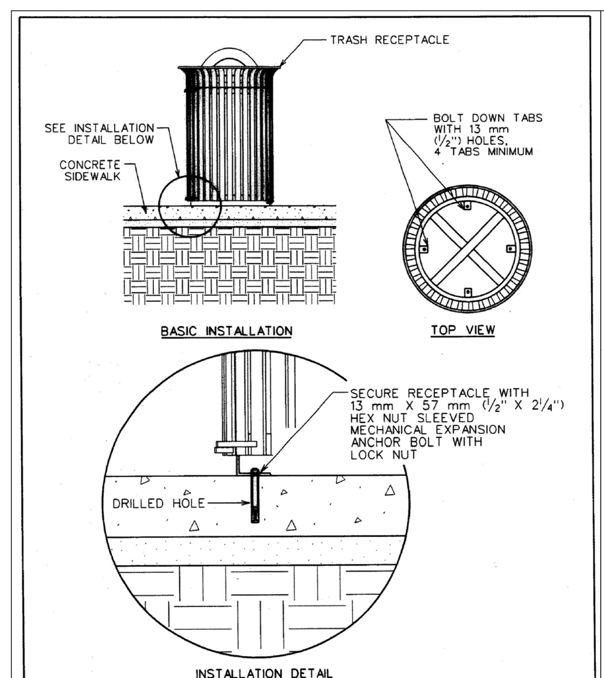

CITY OF AUSTIN DEPARTMENT OF PUBLIC WORKS	TRASH RECEPTACLE INSTALLATION IN CONCRETE SIDEWALK	
11/21/05 ADOPTED	THE ARCHITECT/ENGINEER ASSUMES RESPONSIBILITY FOR APPROPRIATE USE OF THIS STANDARD.	STANDARD NO. 432S-8B 1 OF 2

GENERAL NOTES:

1. FOR BUILDINGS WITH FRONTAGE ON MORE THAN ONE STREET, A TRASH RECPTACLE SHALL BE PLACED ON EACH FRONTAGE. TRASH RECEPTACLES SHALL BE LOCATED WITHIN 3.66 m (12') OF EITHER THE MAIN BUILDING ENTRY OR THE ENTRY TO THE PRIMARY LOCAL USE, OR BOTH.
2. TRASH RECEPTACLES SHALL EITHER BE PLACED ALONG THE CURB, WITH THE CENTER LINE OF THE RECEPTACLE ON LINE WITH THE TREES AND LIGHT POLES, OR SHALL BE LOCATED AT THE BUILDING ENTRY IN ALIGNMENT WITH THE STRUCTURAL BAY SYSTEM OF THE BUILDING. IF LOCATED AT THE ENTRY, THERE SHALL BE NO MORE THAN 300 mm (1') CLEARANCE BETWEEN THE RECEPTACLE AND THE BUILDING WALL.

CITY OF AUSTIN DEPARTMENT OF PUBLIC WORKS	TRASH RECEPTACLE INSTALLATION IN CONCRETE SIDEWALK	
11/21/05 ADOPTED	THE ARCHITECT/ENGINEER ASSUMES RESPONSIBILITY FOR APPROPRIATE USE OF THIS STANDARD.	STANDARD NO. 432S-8B 2 OF 2

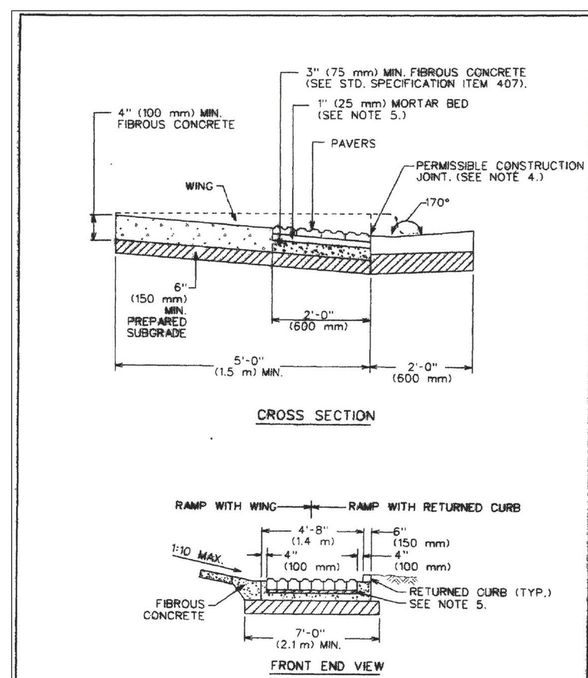

CITY OF AUSTIN DEPARTMENT OF PUBLIC WORKS	DETECTABLE WARNING-PAVER (CITY PROPERTY/EASEMENTS)	
6/21/07 ADOPTED	THE ARCHITECT/ENGINEER ASSUMES RESPONSIBILITY FOR APPROPRIATE USE OF THIS STANDARD.	STANDARD NO. 432S-2A 1 OF 2

GENERAL NOTES:

1. THIS STANDARD IS APPLICABLE FOR RAMP CONSTRUCTION ON CITY PROPERTY AND EASEMENT AREAS ONLY.
2. PAVERS ARE REQUIRED FOR ALL CURB RAMP INSTALLATIONS.
3. PAVERS WILL HAVE DETECTABLE WARNING THAT CONSISTS OF RAISED TRUNCATED DOMES WITH A DIAMETER OF 0.9" (23 mm), A NOMINAL HEIGHT OF 0.2" (5 mm) AND A NOMINAL CENTER TO CENTER SPACING OF 2.35" (60 mm) AND SHALL CONSTRAST VISUALLY WITH ADJOINING SURFACES, EITHER LIGHT-ON-DARK OR DARK-ON-LIGHT (Re: ADAAG SECTION 4.29.2). MATERIAL USED TO PROVIDE CONTRAST SHALL BE AN INTEGRAL PART OF THE WALKING SURFACE. PAVER PATTERN SHALL BE BASKET WEAVE UNLESS DIRECTED OTHERWISE BY THE ENGINEER OR DESIGNATED REPRESENTATIVE.
4. TYPICAL SIDEWALK WIDTHS AND CURB RADII ARE SHOWN FOR ILLUSTRATION ONLY. REFER TO THE TRANSPORTATION CRITERIA MANUAL FOR SIDEWALK WIDTHS, CURB RADII AND CURB BASIS.
5. THE PERMISSIBLE CONSTRUCTION JOINT BETWEEN THE PAVERS AND THE ADJOINING SURFACE SHALL BE LIMITED TO 1/4" (6 mm) JOINT SIZE. GAPS LARGER THAN 1/4" (6 mm) MUST BE APPROVED BY THE ENGINEER OR DESIGNATED REPRESENTATIVE. ALL JOINTS BETWEEN BRICKS AND ADJOINING SURFACE SHALL BE MORTAR FILLED UNLESS DIRECTED OTHERWISE BY THE ENGINEER OR DESIGNATED REPRESENTATIVE.
6. MORTAR SHALL CONFORM TO STD. SPECIFICATION ITEM SECTION 403S.3.5, MORTAR AND GROUT. ALL OTHER CONCRETE SHALL CONFORM TO STD. SPECIFICATION ITEM 403S, CONCRETE FOR STRUCTURES, UNLESS OTHERWISE NOTED.
7. CURB RAMPS WITH RETURNED CURB MAY ONLY BE USED WHERE PEDESTRIANS WOULD NOT NORMALLY WALK DIAGONALLY ACROSS THE RAMP.

CITY OF AUSTIN DEPARTMENT OF PUBLIC WORKS	DETECTABLE WARNING-PAVER (CITY PROPERTY/EASEMENTS)	
6/21/07 ADOPTED	THE ARCHITECT/ENGINEER ASSUMES RESPONSIBILITY FOR APPROPRIATE USE OF THIS STANDARD.	STANDARD NO. 432S-2A 2 OF 2

nudge design
www.nudgedesign.com

REGISTERED LANDSCAPE ARCHITECT BRIAN OTT 89.. STATE OF TEXAS
09 . 13 . 2019

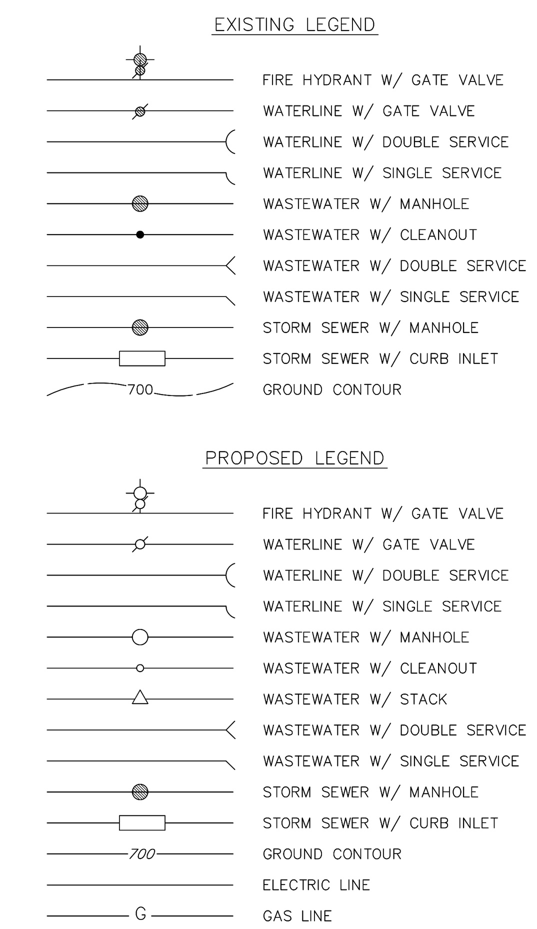

NO.	DATE	REVISIONS	SHEET

THE LOCATION OF EXISTING UNDERGROUND UTILITIES ARE SHOWN IN AN APPROXIMATE WAY ONLY. THE CONTRACTOR SHALL DETERMINE THE EXACT LOCATION OF ALL EXISTING UTILITIES BEFORE COMMENCING WORK. HE AGREES TO BE FULLY RESPONSIBLE FOR ANY AND ALL DAMAGES WHICH MIGHT BE OCCASIONED BY HIS FAILURE TO EXACTLY LOCATE AND PRESERVE ANY AND ALL UNDERGROUND UTILITIES.

RIVER STREET HOTEL & HOMES
60 EAST AVENUE, AUSTIN, TX 78701

STANDARD DETAILS
SDP 2.1

CIVILITUDE
ENGINEERS & PLANNERS
5110 LANCASTER COURT, PHONE 512 761 6161
AUSTIN, TX 78723 FAX 512 761 6167
FIRM REG # F12469 INFO@CIVILITUDE.COM

SCALE:
JOB NO: A379–001
DGN BY: JMS
DWN BY: MAA
RVW BY: JMS

SITE PLAN APPROVAL SHEET ______ OF 18
FILE NUMBER: SP-2019-0465C APPLICATION DATE: 10-21-2019
APPROVED BY COMMISSION ON __________ UNDER SECTION 112 ON
CHAPTER 25-5 OF THE CITY OF AUSTIN CODE
EXPIRATION DATE (25–5–81, LDC)__________ CASE MANAGER JEREMY SALTILA
PROJECT EXPIRATION DATE (ORD.#970905–A)__________DWPZ ______DDZ ______

Director, DEVELOPMENT SERVICES DEPARTMENT
RELEASED FOR GENERAL COMPLIANCE: ______________ ZONING: CBD
Rev. 1 __________ Correction 1 __________
Rev. 2 __________ Correction 2 __________
Rev. 3 __________ Correction 3 __________

Final plat must be recorded by the Project Expiration Date, if applicable. Subsequent Site Plans which do not comply with the Code current at the time of filing, and all required Building Permits and/or a notice of construction (if a Building permit is not required), must also be approved prior to the Project Expiration Date.

SHEET NO. 16 OF 18

RIVER STREET HOTEL & HOMES – 60 EAST AVE, AUSTIN, TX 78701

SP–2019–0465C

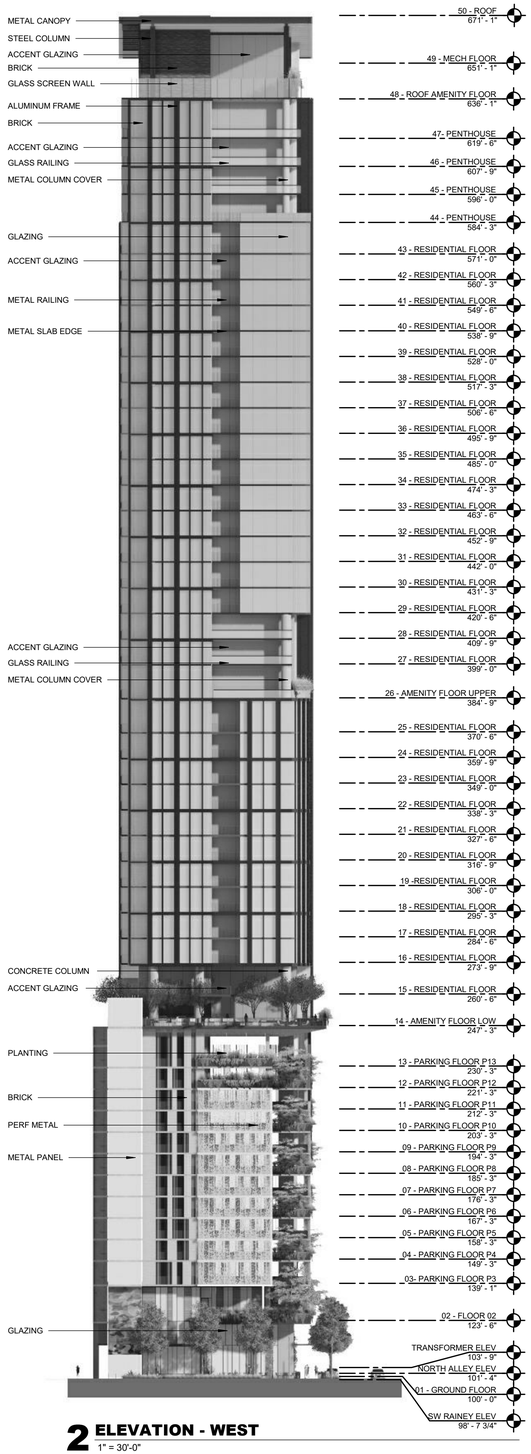

2 ELEVATION - WEST
1" = 30'-0"

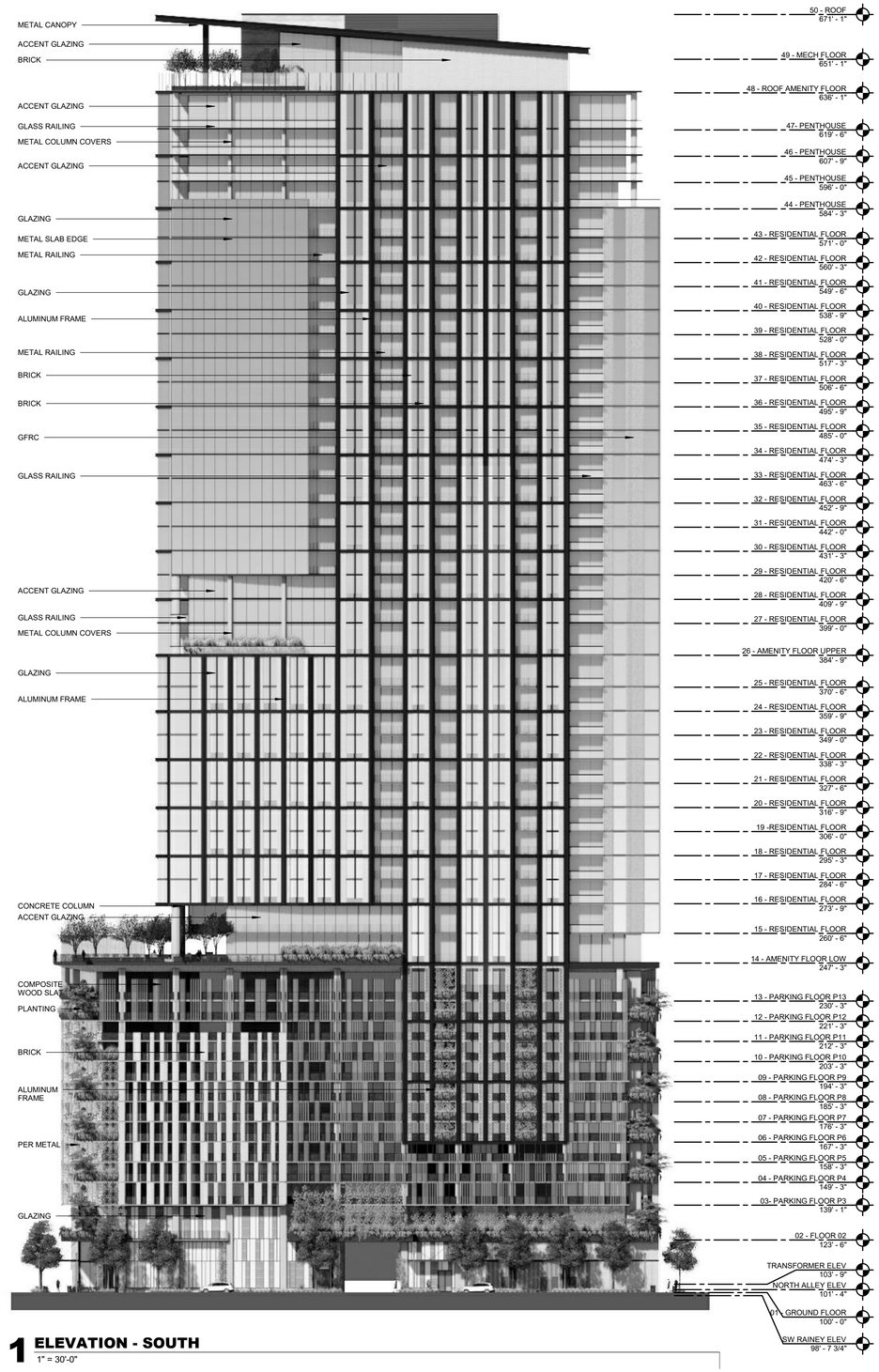

1 ELEVATION - SOUTH
1" = 30'-0"

HKS

ARCHITECT
HKS, INC.
350 N SAINT PAUL ST
SUITE 100
DALLAS, TX 75201

ASSOCIATE ARCHITECT
LAKE FLATO ARCHITECTS
1224 EAST 12TH STREET
SUITE 430
AUSTIN, TX 78702

STRUCTURAL ENGINEER
THORNTON TOMASETTI
707 WILSHIRE BLVD, SUITE 4450
LOS ANGELES, CA 90017

MEP ENGINEER
BLUM CONSULTING ENGINEERS, INC.
8144 WALNUT HILL LANE, SUITE 200
DALLAS, TX 75231

LANDSCAPE ARCHITECT
CAMPBELL LANDSCAPE ARCHITECTURE INC.
608 WEST MONROE STREET UNIT D
AUSTIN, TX 78704

RIVER STREET RESIDENCES

OWNER
HIGH STREET RESIDENTIAL
500 W. 2ND STREET, SUITE 1400
AUSTIN, TX 78701

RIVER STREET PARTNERS
906 RIO GRANDE STREET
AUSTIN, TX 78701

OWNER'S CIVIL ENGINEER
CIVILITUDE ENGINEERS & PLANNERS
5110 LANCASTER COURT
AUSTIN, TX 78723

REVISION

NO.	DESCRIPTION	DATE

HKS PROJECT NUMBER
HKS #24169.000

DATE
10/02/20

ISSUE
SITE DEVELOPMENT PLAN

SHEET TITLE
ELEVATIONS- WEST & SOUTH

SHEET NO.
SDP5.01

© 2020 HKS, INC.

PLOT DATE:
02-Oct-20 3:23:16 PM TEMPLATE VERSION: 4.0.0.20191001

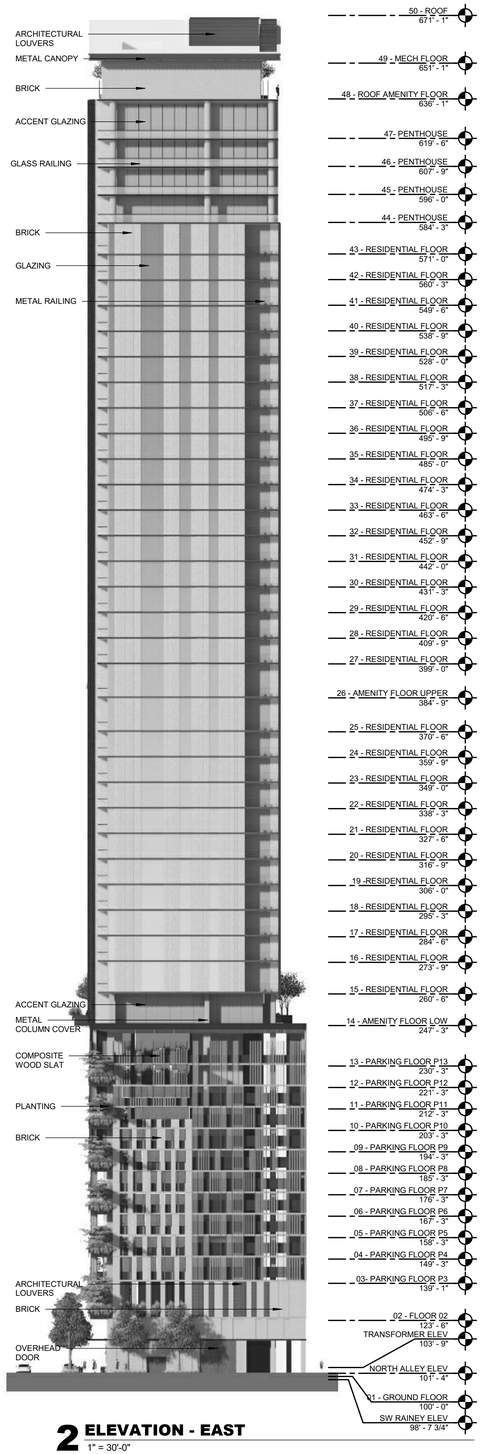

2 ELEVATION - EAST
1" = 30'-0"

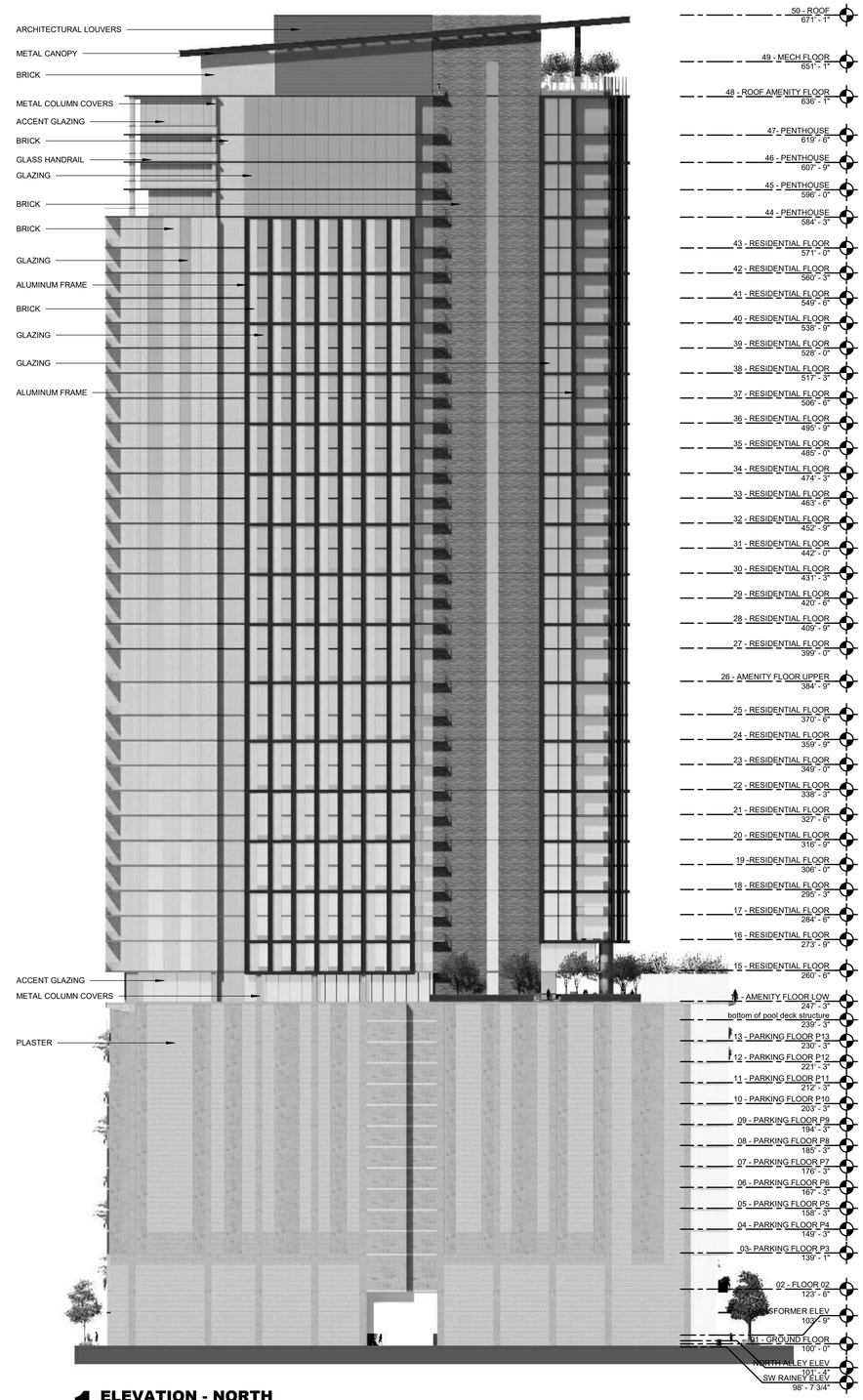

1 ELEVATION - NORTH
1" = 30'-0"

HKS

ARCHITECT
HKS, INC.
350 N SAINT PAUL ST
SUITE 100
DALLAS, TX 75201

ASSOCIATE ARCHITECT
LAKE FLATO ARCHITECTS
1224 EAST 12TH STREET
SUITE 430
AUSTIN, TX 78702

STRUCTURAL ENGINEER
THORNTON TOMASETTI
707 WILSHIRE BLVD, SUITE 4450
LOS ANGELES, CA 90017

MEP ENGINEER
BLUM CONSULTING ENGINEERS, INC.
8144 WALNUT HILL LANE, SUITE 200
DALLAS, TX 75231

LANDSCAPE ARCHITECT
CAMPBELL LANDSCAPE ARCHITECTURE INC.
608 WEST MONROE STREET UNIT D
AUSTIN, TX 78704

RIVER STREET RESIDENCES

OWNER
HIGH STREET RESIDENTIAL
500 W. 2ND STREET, SUITE 1400
AUSTIN, TX 78701

RIVER STREET PARTNERS
906 RIO GRANDE STREET
AUSTIN, TX 78701

OWNER'S CIVIL ENGINEER
CIVILITUDE ENGINEERS & PLANNERS
5110 LANCASTER COURT
AUSTIN, TX 78723

REVISION

NO.	DESCRIPTION	DATE

HKS PROJECT NUMBER
HKS #24169.000

DATE
10/02/20

ISSUE
SITE DEVELOPMENT PLAN

SHEET TITLE
ELEVATIONS - EAST & NORTH

SHEET NO.
SDP5.02

© 2020 HKS, INC.

PLOT DATE: 02-Oct-20 3:25:42 PM TEMPLATE VERSION: 4.0.0.20191001