Proposed work cont.:

Replacing exterior windows, see product sheets for details. Converting a window into a door on the 1st story on back side of the house. Door will not be will not be visible from the street. From street level, the existing fence will block public view, see pictures.

1100 E 8th St

Owner's Authorization Letter

Property Address: 1100 E 8th Street Austin, TX 78702

I/we hereby certify that I/we am/are the owner(s) of the above described property. I/we am/are respectfully requesting processing and approval of the above referenced permit(s) review. I/We hereby authorize the Applicant listed on this application to act on my/our behalf during the processing and presentation of this request. They shall be the principal contact with the City in processing this application.

Property Owner Name: Ben Wahlstrom Revocable Trust

Email: [redacted]

Property Owner Address: 1100 E. 8th Street Austin, TX 78702

Phone Number: [redacted]

Property Owner Signature:

Property Owner Name: Amanda Wahlstrom

Property Owner Email: [redacted]

Property Owner Address: 1100 E. 8th Street Austin, TX 78702

Phone Number: [redacted]

Property Owner Signature:

Applicant Name:

Company: Permit Solutions

Cell:

Applicant Signature: Renee Godinez

Proposal - Detailed

,
Phone: **Fax:**

Sales Rep Name: Bibb, Jeremy
Sales Rep Phone: 512-339-6601
Sales Rep E-Mail: [redacted]
Sales Rep Fax:

Customer Information	Project/Delivery Address	Order Information
Ben Wahlstrom 1100 E 8th St Austin, TX 78702-3225 **Primary Phone:** (503) 8058341 **Mobile Phone:** **Fax Number:** **E-Mail:** **Contact Name:** **Great Plains #:** **Customer Number:** 1010248111 **Customer Account:** 1006424017	**Ben Wahlstrom - 1100 E 8Th St, Austin, TX, US 7870** 1100 E 8Th St **Lot #** Austin, TX 78702 **County:** **Owner Name:** **Owner Phone:**	**Quote Name:** Ben Wahlstrom - 1100 E 8Th St, Austin, TX, US 7870 **Order Number:** 714 **Quote Number:** **14547534** **Order Type:** Installed Sales **Wall Depth:** **Payment Terms:** **Tax Code:** AUSCC **Cust Delivery Date:** None **Quoted Date:** 9/6/2021 **Contracted Date:** **Booked Date:** **Customer PO #:**

Line #	Location:	Attributes	Item Price	Qty	Ext'd Price
10	LABOR	**INSTALLATION LABOR**	$15,678.00	1	$15,678.00

Line #	Location:	Attributes	Item Price	Qty	Ext'd Price
15	MATERIALS	**INSTALLATION MATERIALS**	$1,160.00	1	$1,160.00

Line #	Location:	Attributes	Item Price	Qty	Ext'd Price
20	promo	**PROMOTIONAL DISCOUNT**	$0.00	1	$0.00

Line #	Location:	Attributes	Item Price	Qty	Ext'd Price
25	1	**Pella® Reserve, Traditional, Double Hung, Putty**	$3,251.45	1	$3,251.45

Viewed From Exterior

PK #
2094

1: Non-Standard SizeNon-Standard Size Double Hung, Equal
General Information: Standard, Luxury, Clad, Pine, 5", 3 11/16"
Exterior Color / Finish: Painted, Standard Enduraclad, Putty
Interior Color / Finish: Bright White Paint Interior
Sash / Panel: Putty Glaze, Ogee, Standard, No Sash Lugs
Glass: Insulated Dual Low-E SunDefense™ Low-E Insulating Glass Argon Non High Altitude
Hardware Options: Spoon-Style Lock, Oil Rubbed Bronze, No Window Opening Control Device, No Limited Opening Hardware, Order Sash Lift, Integrated Sensor
Screen: No Screen
Performance Information: U-Factor 0.30, SHGC 0.17, VLT 0.38, CPD PEL-N-232-00304-00001, Performance Class CW, PG 30, Calculated Positive DP Rating 30, Calculated Negative DP Rating 30, TDI WIN-1090, Year Rated 08|11, Clear Opening Width 32.875, Clear Opening Height 40.687, Clear Opening Area 9.288786, Egress Meets Typical 5.7 sqft (E) (United States Only)
Grille: ILT, No Custom Grille, 1 1/4", Traditional (2W1H / 2W1H), Putty Glaze, Ogee

Line #	Location:	Attributes
30	2	

Viewed From Exterior

Pella® Reserve, Traditional, Double Hung, Putty

Item Price	Qty	Ext'd Price
$3,251.45	1	$3,251.45

PK #
2094

1: Non-Standard SizeNon-Standard Size Double Hung, Equal
General Information: Standard, Luxury, Clad, Pine, 5", 3 11/16"
Exterior Color / Finish: Painted, Standard Enduraclad, Putty
Interior Color / Finish: Bright White Paint Interior
Sash / Panel: Putty Glaze, Ogee, Standard, No Sash Lugs
Glass: Insulated Dual Low-E SunDefense™ Low-E Insulating Glass Argon Non High Altitude
Hardware Options: Spoon-Style Lock, Oil Rubbed Bronze, No Window Opening Control Device, No Limited Opening Hardware, Order Sash Lift, Integrated Sensor
Screen: No Screen
Performance Information: U-Factor 0.30, SHGC 0.17, VLT 0.38, CPD PEL-N-232-00304-00001, Performance Class CW, PG 30, Calculated Positive DP Rating 30, Calculated Negative DP Rating 30, TDI WIN-1090, Year Rated 08|11, Clear Opening Width 32.875, Clear Opening Height 40.687, Clear Opening Area 9.288786, Egress Meets Typical 5.7 sqft (E) (United States Only)
Grille: ILT, No Custom Grille, 1 1/4", Traditional (2W1H / 2W1H), Putty Glaze, Ogee

Line #	Location:	Attributes
35	3	

Viewed From Exterior

Pella® Reserve, Traditional, Double Hung, Putty

Item Price	Qty	Ext'd Price
$3,251.45	1	$3,251.45

PK #
2094

1: Non-Standard SizeNon-Standard Size Double Hung, Equal
General Information: Standard, Luxury, Clad, Pine, 5", 3 11/16"
Exterior Color / Finish: Painted, Standard Enduraclad, Putty
Interior Color / Finish: Bright White Paint Interior
Sash / Panel: Putty Glaze, Ogee, Standard, No Sash Lugs
Glass: Insulated Dual Low-E SunDefense™ Low-E Insulating Glass Argon Non High Altitude
Hardware Options: Spoon-Style Lock, Oil Rubbed Bronze, No Window Opening Control Device, No Limited Opening Hardware, Order Sash Lift, Integrated Sensor
Screen: No Screen
Performance Information: U-Factor 0.30, SHGC 0.17, VLT 0.38, CPD PEL-N-232-00304-00001, Performance Class CW, PG 30, Calculated Positive DP Rating 30, Calculated Negative DP Rating 30, TDI WIN-1090, Year Rated 08|11, Clear Opening Width 32.875, Clear Opening Height 40.687, Clear Opening Area 9.288786, Egress Meets Typical 5.7 sqft (E) (United States Only)
Grille: ILT, No Custom Grille, 1 1/4", Traditional (2W1H / 2W1H), Putty Glaze, Ogee

Line #	Location:	Attributes
40	4	

Viewed From Exterior

Pella® Reserve, Traditional, Double Hung, Putty

Item Price	Qty	Ext'd Price
$3,251.45	1	$3,251.45

PK #
2094

1: Non-Standard SizeNon-Standard Size Double Hung, Equal
General Information: Standard, Luxury, Clad, Pine, 5", 3 11/16"
Exterior Color / Finish: Painted, Standard Enduraclad, Putty
Interior Color / Finish: Bright White Paint Interior
Sash / Panel: Putty Glaze, Ogee, Standard, No Sash Lugs
Glass: Insulated Dual Low-E SunDefense™ Low-E Insulating Glass Argon Non High Altitude
Hardware Options: Spoon-Style Lock, Oil Rubbed Bronze, No Window Opening Control Device, No Limited Opening Hardware, Order Sash Lift, Integrated Sensor
Screen: No Screen
Performance Information: U-Factor 0.30, SHGC 0.17, VLT 0.38, CPD PEL-N-232-00304-00001, Performance Class CW, PG 30, Calculated Positive DP Rating 30, Calculated Negative DP Rating 30, TDI WIN-1090, Year Rated 08|11, Clear Opening Width 32.875, Clear Opening Height 40.687, Clear Opening Area 9.288786, Egress Meets Typical 5.7 sqft (E) (United States Only)
Grille: ILT, No Custom Grille, 1 1/4", Traditional (2W1H / 2W1H), Putty Glaze, Ogee

Line #	Location:	Attributes
45	5	

Viewed From Exterior

Pella® Reserve, Traditional, Double Hung, Putty

Item Price	Qty	Ext'd Price
$3,251.45	1	$3,251.45

PK #
2094

1: Non-Standard SizeNon-Standard Size Double Hung, Equal
General Information: Standard, Luxury, Clad, Pine, 5", 3 11/16"
Exterior Color / Finish: Painted, Standard Enduraclad, Putty
Interior Color / Finish: Bright White Paint Interior
Sash / Panel: Putty Glaze, Ogee, Standard, No Sash Lugs
Glass: Insulated Dual Low-E SunDefense™ Low-E Insulating Glass Argon Non High Altitude
Hardware Options: Spoon-Style Lock, Oil Rubbed Bronze, No Window Opening Control Device, No Limited Opening Hardware, Order Sash Lift, Integrated Sensor
Screen: No Screen
Performance Information: U-Factor 0.30, SHGC 0.17, VLT 0.38, CPD PEL-N-232-00304-00001, Performance Class CW, PG 30, Calculated Positive DP Rating 30, Calculated Negative DP Rating 30, TDI WIN-1090, Year Rated 08|11, Clear Opening Width 32.875, Clear Opening Height 40.687, Clear Opening Area 9.288786, Egress Meets Typical 5.7 sqft (E) (United States Only)
Grille: ILT, No Custom Grille, 1 1/4", Traditional (2W1H / 2W1H), Putty Glaze, Ogee

Line #	Location:	Attributes
50	6	

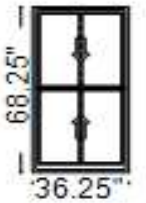

Viewed From Exterior

Pella® Reserve, Traditional, Double Hung, Putty

Item Price	Qty	Ext'd Price
$2,921.79	1	$2,921.79

PK #
2094

1: Non-Standard SizeNon-Standard Size Double Hung, Equal
General Information: Standard, Luxury, Clad, Pine, 5", 3 11/16"
Exterior Color / Finish: Painted, Standard Enduraclad, Putty
Interior Color / Finish: Bright White Paint Interior
Sash / Panel: Putty Glaze, Ogee, Standard, No Sash Lugs
Glass: Insulated Dual Low-E SunDefense™ Low-E Insulating Glass Argon Non High Altitude
Hardware Options: Spoon-Style Lock, Oil Rubbed Bronze, No Window Opening Control Device, No Limited Opening Hardware, Order Sash Lift, Integrated Sensor
Screen: No Screen
Performance Information: U-Factor 0.30, SHGC 0.17, VLT 0.38, CPD PEL-N-232-00304-00001, Performance Class CW, PG 50, Calculated Positive DP Rating 50, Calculated Negative DP Rating 50, TDI WIN-1090, Year Rated 08|11, Clear Opening Width 32.875, Clear Opening Height 29.687, Clear Opening Area 6.777501, Egress Meets Typical 5.7 sqft (E) (United States Only)
Grille: ILT, No Custom Grille, 1 1/4", Traditional (2W1H / 2W1H), Putty Glaze, Ogee

Line #	Location:	Attributes
55	7	

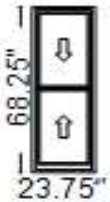

Viewed From Exterior

Pella® Reserve, Traditional, Double Hung, Putty

Item Price	Qty	Ext'd Price
$2,401.51	1	$2,401.51

PK #
2094

1: Non-Standard SizeNon-Standard Size Double Hung, Equal
General Information: Standard, Luxury, Clad, Pine, 5", 3 11/16"
Exterior Color / Finish: Painted, Standard Enduraclad, Putty
Interior Color / Finish: Bright White Paint Interior
Sash / Panel: Putty Glaze, Ogee, Standard, No Sash Lugs
Glass: Insulated Dual Low-E SunDefense™ Low-E Insulating Glass Argon Non High Altitude
Hardware Options: Spoon-Style Lock, Oil Rubbed Bronze, No Window Opening Control Device, No Limited Opening Hardware, Order Sash Lift, Integrated Sensor
Screen: No Screen
Performance Information: U-Factor 0.28, SHGC 0.21, VLT 0.49, CPD PEL-N-232-00301-00001, Performance Class CW, PG 50, Calculated Positive DP Rating 50, Calculated Negative DP Rating 50, TDI WIN-1090, Year Rated 08|11, Clear Opening Width 20.375, Clear Opening Height 29.687, Clear Opening Area 4.200504, Egress Does not meet typical United States egress, but may comply with local code requirements
Grille: No Grille,

Line #	Location:	Attributes
60	8	

Viewed From Exterior

Pella® Reserve, Traditional, Double Hung, Putty

Item Price	Qty	Ext'd Price
$3,251.45	1	$3,251.45

PK # 2094

1: Non-Standard SizeNon-Standard Size Double Hung, Equal
General Information: Standard, Luxury, Clad, Pine, 5", 3 11/16"
Exterior Color / Finish: Painted, Standard Enduraclad, Putty
Interior Color / Finish: Bright White Paint Interior
Sash / Panel: Putty Glaze, Ogee, Standard, No Sash Lugs
Glass: Insulated Dual Low-E SunDefense™ Low-E Insulating Glass Argon Non High Altitude
Hardware Options: Spoon-Style Lock, Oil Rubbed Bronze, No Window Opening Control Device, No Limited Opening Hardware, Order Sash Lift, Integrated Sensor
Screen: No Screen
Performance Information: U-Factor 0.30, SHGC 0.17, VLT 0.38, CPD PEL-N-232-00304-00001, Performance Class CW, PG 30, Calculated Positive DP Rating 30, Calculated Negative DP Rating 30, TDI WIN-1090, Year Rated 08|11, Clear Opening Width 32.875, Clear Opening Height 40.687, Clear Opening Area 9.288786, Egress Meets Typical 5.7 sqft (E) (United States Only)
Grille: ILT, No Custom Grille, 1 1/4", Traditional (2W1H / 2W1H), Putty Glaze, Ogee

Line #	Location:	Attributes
65	9	

Viewed From Exterior

Pella® Reserve, Traditional, Double Hung, Putty

Item Price	Qty	Ext'd Price
$3,251.45	1	$3,251.45

PK # 2094

1: Non-Standard SizeNon-Standard Size Double Hung, Equal
General Information: Standard, Luxury, Clad, Pine, 5", 3 11/16"
Exterior Color / Finish: Painted, Standard Enduraclad, Putty
Interior Color / Finish: Bright White Paint Interior
Sash / Panel: Putty Glaze, Ogee, Standard, No Sash Lugs
Glass: Insulated Dual Low-E SunDefense™ Low-E Insulating Glass Argon Non High Altitude
Hardware Options: Spoon-Style Lock, Oil Rubbed Bronze, No Window Opening Control Device, No Limited Opening Hardware, Order Sash Lift, Integrated Sensor
Screen: No Screen
Performance Information: U-Factor 0.30, SHGC 0.17, VLT 0.38, CPD PEL-N-232-00304-00001, Performance Class CW, PG 30, Calculated Positive DP Rating 30, Calculated Negative DP Rating 30, TDI WIN-1090, Year Rated 08|11, Clear Opening Width 32.875, Clear Opening Height 40.687, Clear Opening Area 9.288786, Egress Meets Typical 5.7 sqft (E) (United States Only)
Grille: ILT, No Custom Grille, 1 1/4", Traditional (2W1H / 2W1H), Putty Glaze, Ogee

Line #	Location:	Attributes
70	10	

Viewed From Exterior

Pella® Reserve, Traditional, Double Hung, Putty

Item Price	Qty	Ext'd Price
$3,251.45	1	$3,251.45

PK #
2094

1: Non-Standard SizeNon-Standard Size Double Hung, Equal
General Information: Standard, Luxury, Clad, Pine, 5", 3 11/16"
Exterior Color / Finish: Painted, Standard Enduraclad, Putty
Interior Color / Finish: Bright White Paint Interior
Sash / Panel: Putty Glaze, Ogee, Standard, No Sash Lugs
Glass: Insulated Dual Low-E SunDefense™ Low-E Insulating Glass Argon Non High Altitude
Hardware Options: Spoon-Style Lock, Oil Rubbed Bronze, No Window Opening Control Device, No Limited Opening Hardware, Order Sash Lift, Integrated Sensor
Screen: No Screen
Performance Information: U-Factor 0.30, SHGC 0.17, VLT 0.38, CPD PEL-N-232-00304-00001, Performance Class CW, PG 30, Calculated Positive DP Rating 30, Calculated Negative DP Rating 30, TDI WIN-1090, Year Rated 08|11, Clear Opening Width 32.875, Clear Opening Height 40.687, Clear Opening Area 9.288786, Egress Meets Typical 5.7 sqft (E) (United States Only)
Grille: ILT, No Custom Grille, 1 1/4", Traditional (2W1H / 2W1H), Putty Glaze, Ogee

Line #	Location:	Attributes
75	11	

Viewed From Exterior

Pella® Reserve, Traditional, Double Hung, Putty

Item Price	Qty	Ext'd Price
$3,251.45	1	$3,251.45

PK #
2094

1: Non-Standard SizeNon-Standard Size Double Hung, Equal
General Information: Standard, Luxury, Clad, Pine, 5", 3 11/16"
Exterior Color / Finish: Painted, Standard Enduraclad, Putty
Interior Color / Finish: Bright White Paint Interior
Sash / Panel: Putty Glaze, Ogee, Standard, No Sash Lugs
Glass: Insulated Dual Low-E SunDefense™ Low-E Insulating Glass Argon Non High Altitude
Hardware Options: Spoon-Style Lock, Oil Rubbed Bronze, No Window Opening Control Device, No Limited Opening Hardware, Order Sash Lift, Integrated Sensor
Screen: No Screen
Performance Information: U-Factor 0.30, SHGC 0.17, VLT 0.38, CPD PEL-N-232-00304-00001, Performance Class CW, PG 30, Calculated Positive DP Rating 30, Calculated Negative DP Rating 30, TDI WIN-1090, Year Rated 08|11, Clear Opening Width 32.875, Clear Opening Height 40.687, Clear Opening Area 9.288786, Egress Meets Typical 5.7 sqft (E) (United States Only)
Grille: ILT, No Custom Grille, 1 1/4", Traditional (2W1H / 2W1H), Putty Glaze, Ogee

Line #	Location:	Attributes
80	12	

Viewed From Exterior

Pella® Reserve, Traditional, Double Hung, Putty

Item Price	Qty	Ext'd Price
$3,251.45	1	$3,251.45

PK # 2094

1: Non-Standard SizeNon-Standard Size Double Hung, Equal
General Information: Standard, Luxury, Clad, Pine, 5", 3 11/16"
Exterior Color / Finish: Painted, Standard Enduraclad, Putty
Interior Color / Finish: Bright White Paint Interior
Sash / Panel: Putty Glaze, Ogee, Standard, No Sash Lugs
Glass: Insulated Dual Low-E SunDefense™ Low-E Insulating Glass Argon Non High Altitude
Hardware Options: Spoon-Style Lock, Oil Rubbed Bronze, No Window Opening Control Device, No Limited Opening Hardware, Order Sash Lift, Integrated Sensor
Screen: No Screen
Performance Information: U-Factor 0.30, SHGC 0.17, VLT 0.38, CPD PEL-N-232-00304-00001, Performance Class CW, PG 30, Calculated Positive DP Rating 30, Calculated Negative DP Rating 30, TDI WIN-1090, Year Rated 08|11, Clear Opening Width 32.875, Clear Opening Height 40.687, Clear Opening Area 9.288786, Egress Meets Typical 5.7 sqft (E) (United States Only)
Grille: ILT, No Custom Grille, 1 1/4", Traditional (2W1H / 2W1H), Putty Glaze, Ogee

Line #	Location:	Attributes
85	13	

Viewed From Exterior

Pella® Reserve, Traditional, Double Hung, Putty

Item Price	Qty	Ext'd Price
$3,251.45	1	$3,251.45

PK # 2094

1: Non-Standard SizeNon-Standard Size Double Hung, Equal
General Information: Standard, Luxury, Clad, Pine, 5", 3 11/16"
Exterior Color / Finish: Painted, Standard Enduraclad, Putty
Interior Color / Finish: Bright White Paint Interior
Sash / Panel: Putty Glaze, Ogee, Standard, No Sash Lugs
Glass: Insulated Dual Low-E SunDefense™ Low-E Insulating Glass Argon Non High Altitude
Hardware Options: Spoon-Style Lock, Oil Rubbed Bronze, No Window Opening Control Device, No Limited Opening Hardware, Order Sash Lift, Integrated Sensor
Screen: No Screen
Performance Information: U-Factor 0.30, SHGC 0.17, VLT 0.38, CPD PEL-N-232-00304-00001, Performance Class CW, PG 30, Calculated Positive DP Rating 30, Calculated Negative DP Rating 30, TDI WIN-1090, Year Rated 08|11, Clear Opening Width 32.875, Clear Opening Height 40.687, Clear Opening Area 9.288786, Egress Meets Typical 5.7 sqft (E) (United States Only)
Grille: ILT, No Custom Grille, 1 1/4", Traditional (2W1H / 2W1H), Putty Glaze, Ogee

Line #	Location:	Attributes
90	14	

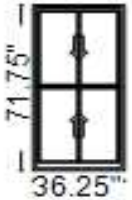

Viewed From Exterior

Pella® Reserve, Traditional, Double Hung, Putty

Item Price	Qty	Ext'd Price
$2,966.75	1	$2,966.75

PK # 2094

1: Non-Standard SizeNon-Standard Size Double Hung, Equal
General Information: Standard, Luxury, Clad, Pine, 5", 3 11/16"
Exterior Color / Finish: Painted, Standard Enduraclad, Putty
Interior Color / Finish: Bright White Paint Interior
Sash / Panel: Putty Glaze, Ogee, Standard, No Sash Lugs
Glass: Insulated Dual Low-E SunDefense™ Low-E Insulating Glass Argon Non High Altitude
Hardware Options: Spoon-Style Lock, Oil Rubbed Bronze, No Window Opening Control Device, No Limited Opening Hardware, Order Sash Lift, Integrated Sensor
Screen: No Screen
Performance Information: U-Factor 0.30, SHGC 0.17, VLT 0.38, CPD PEL-N-232-00304-00001, Performance Class CW, PG 50, Calculated Positive DP Rating 50, Calculated Negative DP Rating 50, TDI WIN-1090, Year Rated 08|11, Clear Opening Width 32.875, Clear Opening Height 31.437, Clear Opening Area 7.177023, Egress Meets Typical 5.7 sqft (E) (United States Only)
Grille: ILT, No Custom Grille, 1 1/4", Traditional (2W1H / 2W1H), Putty Glaze, Ogee

Line #	Location:	Attributes
95	15	

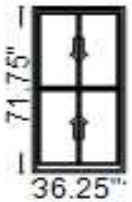

Viewed From Exterior

Pella® Reserve, Traditional, Double Hung, Putty

Item Price	Qty	Ext'd Price
$2,966.75	1	$2,966.75

PK # 2094

1: Non-Standard SizeNon-Standard Size Double Hung, Equal
General Information: Standard, Luxury, Clad, Pine, 5", 3 11/16"
Exterior Color / Finish: Painted, Standard Enduraclad, Putty
Interior Color / Finish: Bright White Paint Interior
Sash / Panel: Putty Glaze, Ogee, Standard, No Sash Lugs
Glass: Insulated Dual Low-E SunDefense™ Low-E Insulating Glass Argon Non High Altitude
Hardware Options: Spoon-Style Lock, Oil Rubbed Bronze, No Window Opening Control Device, No Limited Opening Hardware, Order Sash Lift, Integrated Sensor
Screen: No Screen
Performance Information: U-Factor 0.30, SHGC 0.17, VLT 0.38, CPD PEL-N-232-00304-00001, Performance Class CW, PG 50, Calculated Positive DP Rating 50, Calculated Negative DP Rating 50, TDI WIN-1090, Year Rated 08|11, Clear Opening Width 32.875, Clear Opening Height 31.437, Clear Opening Area 7.177023, Egress Meets Typical 5.7 sqft (E) (United States Only)
Grille: ILT, No Custom Grille, 1 1/4", Traditional (2W1H / 2W1H), Putty Glaze, Ogee

Line #	Location:	Attributes
100	16	

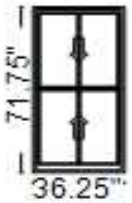

Viewed From Exterior

Pella® Reserve, Traditional, Double Hung, Putty

Item Price	Qty	Ext'd Price
$2,966.75	1	$2,966.75

PK #
2094

1: Non-Standard SizeNon-Standard Size Double Hung, Equal
General Information: Standard, Luxury, Clad, Pine, 5", 3 11/16"
Exterior Color / Finish: Painted, Standard Enduraclad, Putty
Interior Color / Finish: Bright White Paint Interior
Sash / Panel: Putty Glaze, Ogee, Standard, No Sash Lugs
Glass: Insulated Dual Low-E SunDefense™ Low-E Insulating Glass Argon Non High Altitude
Hardware Options: Spoon-Style Lock, Oil Rubbed Bronze, No Window Opening Control Device, No Limited Opening Hardware, Order Sash Lift, Integrated Sensor
Screen: No Screen
Performance Information: U-Factor 0.30, SHGC 0.17, VLT 0.38, CPD PEL-N-232-00304-00001, Performance Class CW, PG 50, Calculated Positive DP Rating 50, Calculated Negative DP Rating 50, TDI WIN-1090, Year Rated 08|11, Clear Opening Width 32.875, Clear Opening Height 31.437, Clear Opening Area 7.177023, Egress Meets Typical 5.7 sqft (E) (United States Only)
Grille: ILT, No Custom Grille, 1 1/4", Traditional (2W1H / 2W1H), Putty Glaze, Ogee

Line #	Location:	Attributes
105	PLACE HOLDER - D.N.O	

Wood Products 3 1/2 Craftsman 2, Length: 96, Bright White. Wood Type: Pine

Item Price	Qty	Ext'd Price
$56.15	37	$2,077.55

PK #
2094

1: Accessory
General Information: Pine, 3 1/2 Craftsman 2
Interior Color / Finish: Bright White Paint Interior

Viewed From Exterior

Thank You For Your Interest In Pella® Products

PELLA WARRANTY:

Pella products are covered by Pella's limited warranties in effect at the time of sale. All applicable product warranties are incorporated into and become a part of this contract. Please see the warranties for complete details, taking special note of the two important notice sections regarding installation of Pella products and proper management of moisture within the wall system. Neither Pella Corporation nor the Seller will be bound by any other warranty unless specifically set out in this contract. However, Pella Corporation will not be liable for branch warranties which create obligations in addition to or obligations which are inconsistent with Pella written warranties.

Clear opening (egress) information does not take into consideration the addition of a Rolscreen [or any other accessory] to the product. You should consult your local building code to ensure your Pella products meet local egress requirements.

Per the manufacturer's limited warranty, unfinished mahogany exterior windows and doors must be finished upon receipt prior to installing and refinished annually, thereafter. Variations in wood grain, color, texture or natural characteristics are not covered under the limited warranty.

INSYNCTIVE PRODUCTS: In addition, Pella Insynctive Products are covered by the Pella Insynctive Products Software License Agreement and Pella Insynctive Products Privacy Policy in effect at the time of sale, which can be found at Insynctive.pella.com. By installing or using Your Insynctive Products you are acknowledging the Insynctive Software Agreement and Privacy Policy are part of the terms of sale.

Notice of Collection of Personal Information: We may collect your personal information when you interact with us. Under the California Consumer Privacy Act (CCPA), California residents have specific rights to request this information, request to delete this information, and opt out of the sharing or sale of this information to third parties. To learn more about our collection practices and your rights under the CCPA please visit our link https://www.pella.com/california-rights-policy/ at pella.com.

ARBITRATION AND CLASS ACTION WAIVER ("ARBITRATION AGREEMENT")

YOU and Pella and its subsidiaries and the Pella Branded Distributor **AGREE TO ARBITRATE DISPUTES ARISING OUT OF OR RELATING TO YOUR PELLA PRODUCTS (INCLUDES PELLA GOODS AND PELLA SERVICES) AND WAIVE THE RIGHT TO HAVE A COURT OR JURY DECIDE DISPUTES. YOU WAIVE ALL RIGHTS TO PROCEED AS A MEMBER OR REPRESENTATIVE OF A CLASS ACTION, INCLUDING CLASS ARBITRATION, REGARDING DISPUTES ARISING OUT OF OR RELATING TO YOUR PELLA PRODUCTS.** You may opt out of this Arbitration Agreement by providing notice to Pella no later than ninety (90) calendar days from the date You purchased or otherwise took ownership of Your Pella Goods. To opt out, You must send notice by e-mail to pellawebsupport@pella.com, with the subject line: "Arbitration Opt Out" or by calling (877) 473-5527. Opting out of the Arbitration Agreement will not affect the coverage provided by any applicable limited warranty pertaining to Your Pella Products. For complete information, including the full terms and conditions of this Arbitration Agreement, which are incorporated herein by reference, please visit www.pella.com/arbitration or e-mail to pellawebsupport@pella.com, with the subject line: "Arbitration Details" or call (877) 473-5527. D'ARBITRAGE ET RENONCIATION AU RECOURS COLLECTIF ("convention d'arbitrage") EN FRANÇAIS SEE PELLA.COM/ARBITRATION. DE ARBITRAJE Y RENUNCIA COLECTIVA ("acuerdo de arbitraje") EN ESPAÑOL VER PELLA.COM/ARBITRATION.

Seller shall not be held liable for failure or delay in the performance of its obligations under this Agreement, if such performance is hindered or delayed by the occurrence of an act or event beyond the Seller's reasonable control (force majeure event), including but not limited to earthquakes, unusually severe weather and other Acts of God, fire, strikes and labor unrest, epidemics, riots, war, civil unrest, and government interventions. Seller shall give timely notice of a force majeure event and take such reasonable action to mitigate the impacts of such an event.

Product Performance Information:

U-Factor, Solar Heat Gain Coefficient (SHGC), and Visible Light Transmittance (VLT) are certified by the National Fenestration Rating Council (NFRC).

Manufacturer stipulates that these ratings conform to applicable NFRC procedures for determining whole product performance. NFRC ratings are determined for a fixed set of environmental conditions and a specific product size. NFRC does not recommend any products and does not warrant the suitability of any product for any specific use.

Design Pressure (DP), Performance Class, and Performance Grade (PG) are certified by a third party organization, in many cases the Window and Door Manufacturers Association (WDMA). The certification requires the performance of at least one product of the product line to be tested in accordance with the applicable performance standards and verified by an independent party. The certification indicates that the product(s) of the product line passed the applicable tests. The certification does not apply to mulled and/or product combinations unless noted. Actual product results will vary and change over the products life.

For more performance information along with information on Florida Product Approval System (FPAS) Number and Texas Dept. of Insurance (TDI) number go to www.pella.com/performance.

TERMS & CONDITIONS:

Order Totals	
Taxable Subtotal	$53,227.05
Sales Tax @ 8.25%	$4,391.23
Non-taxable Subtotal	$15,678.00
Total	$73,296.28
Deposit Received	$0.00
Amount Due	**$73,296.28**

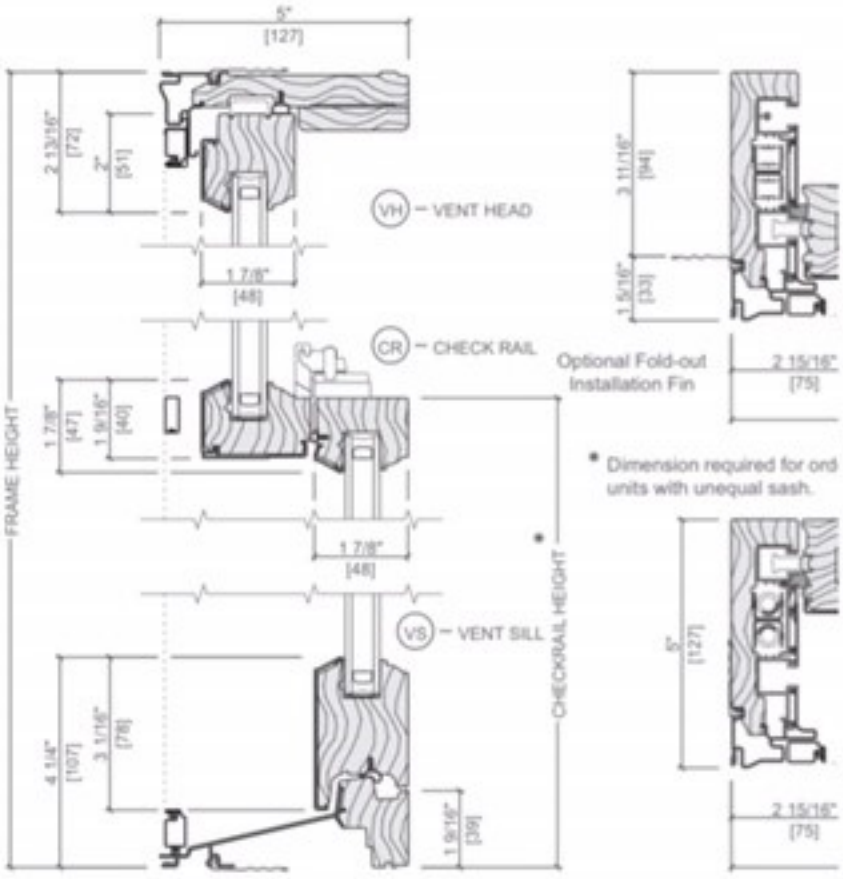

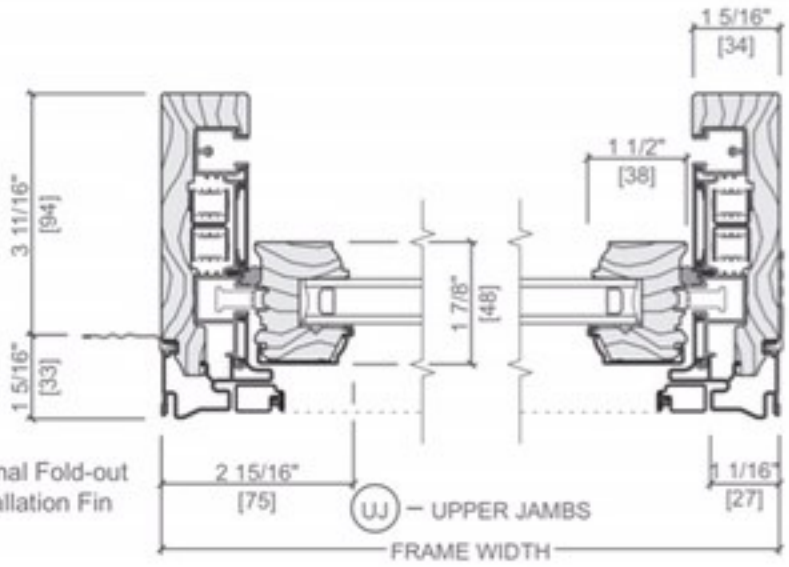

* Dimension required for ordering
units with unequal sash.

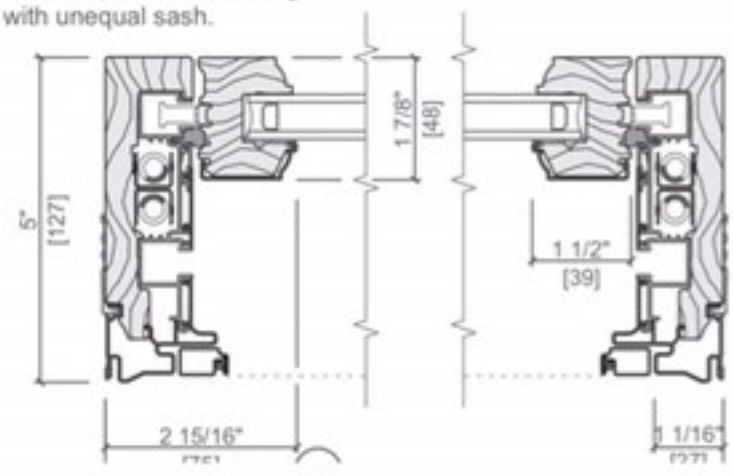

egral Light Technology™ Grilles

Ogee Grilles
Clad Exterior - Wood Interior

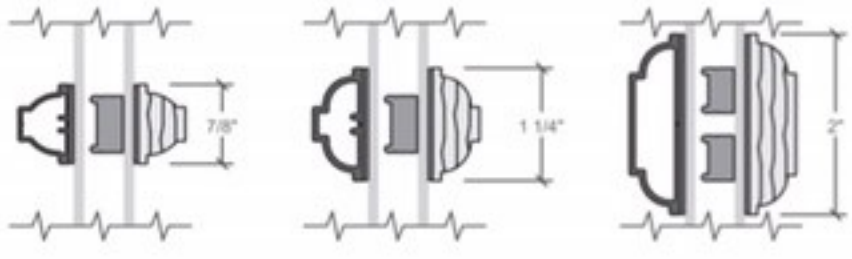

Putty Glaze and Ogee Grilles
Clad Exterior - Wood Interior

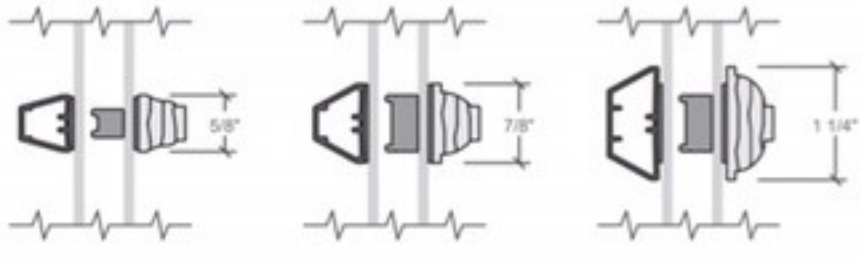

omside Removable Grilles

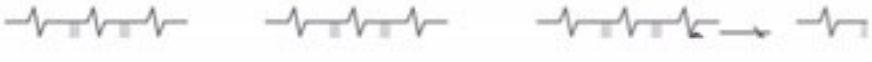

Arrow indicating street view - window not visible from sidewalk

STOP

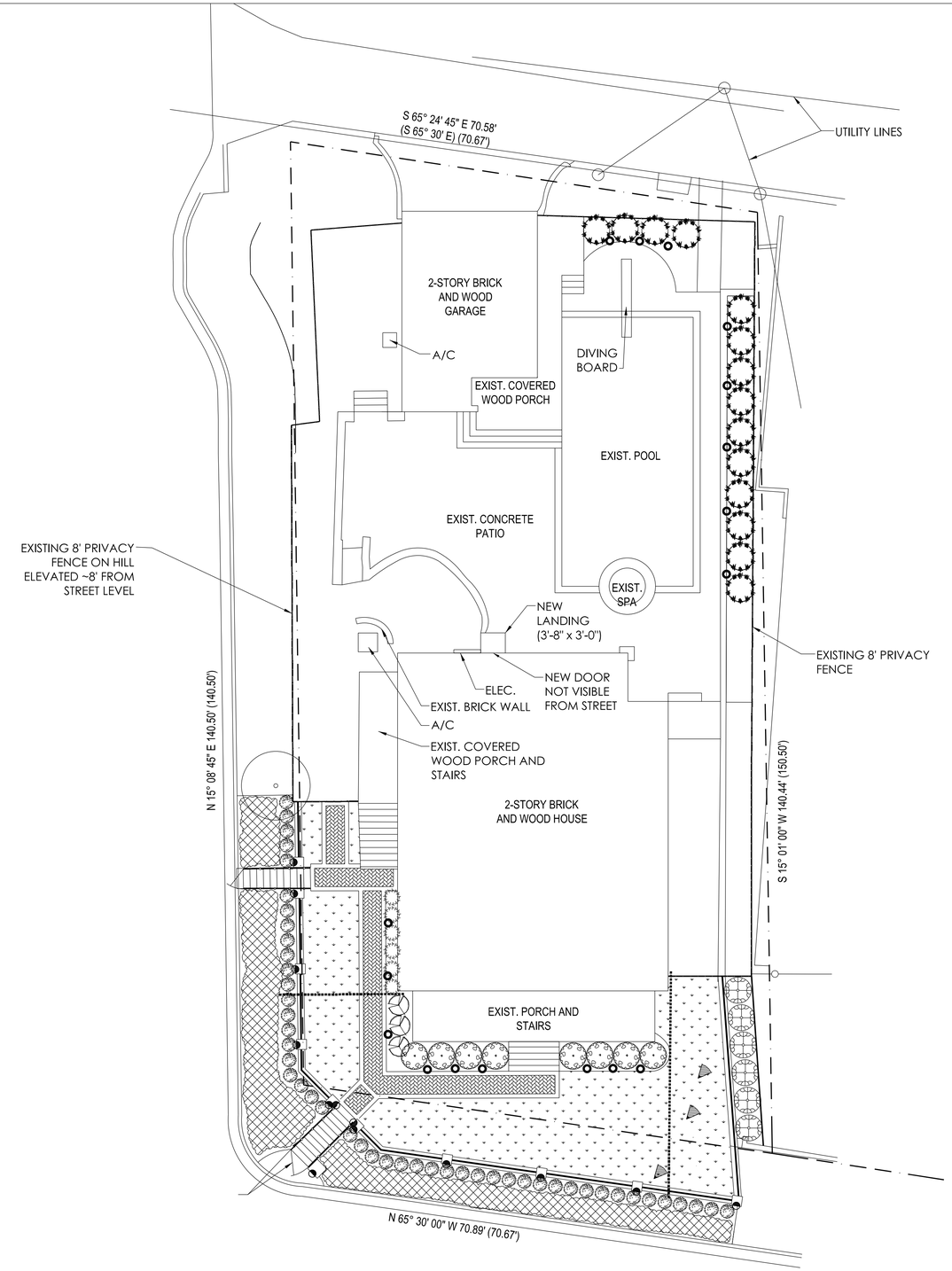

N 1 **Proposed Site Plan**

SCALE: 1" = 10'-0" SHEET SIZE: 34" x 22"

STATE OF TEXAS
CHARLES A. WITT III
114625
REGISTERED
PROFESSIONAL ENGINEER

THE SEAL APPEARING ON THIS DOCUMENT WAS AUTHORIZED BY CHARLES A. WITT III, P.E. 114625, ON 15 NOV. 2021.

Charles A. Witt III

Mark	Description	Date
1	100% DESIGN SUBMITTAL	15-NOV-21
2	UPDATE-1	20-JAN-22

ENGINEERING SOLUTIONS
650 SHELL STONE TRAIL
GEORGETOWN, TX 78628
C: 512-639-3131
CO. # F-15327

PROPOSED SITE PLAN

1100 EAST 8TH STREET
AUSTIN, TX78702

SHEETNUMBER

A0

EXISTING WALLS TO REMAIN
WALL TO BE REMOVED
EXISTING WINDOW TO REMAIN
EXISTING WINDOW TO BE REMOVED
NEW WALLS
WINDOW ON NEW WALL

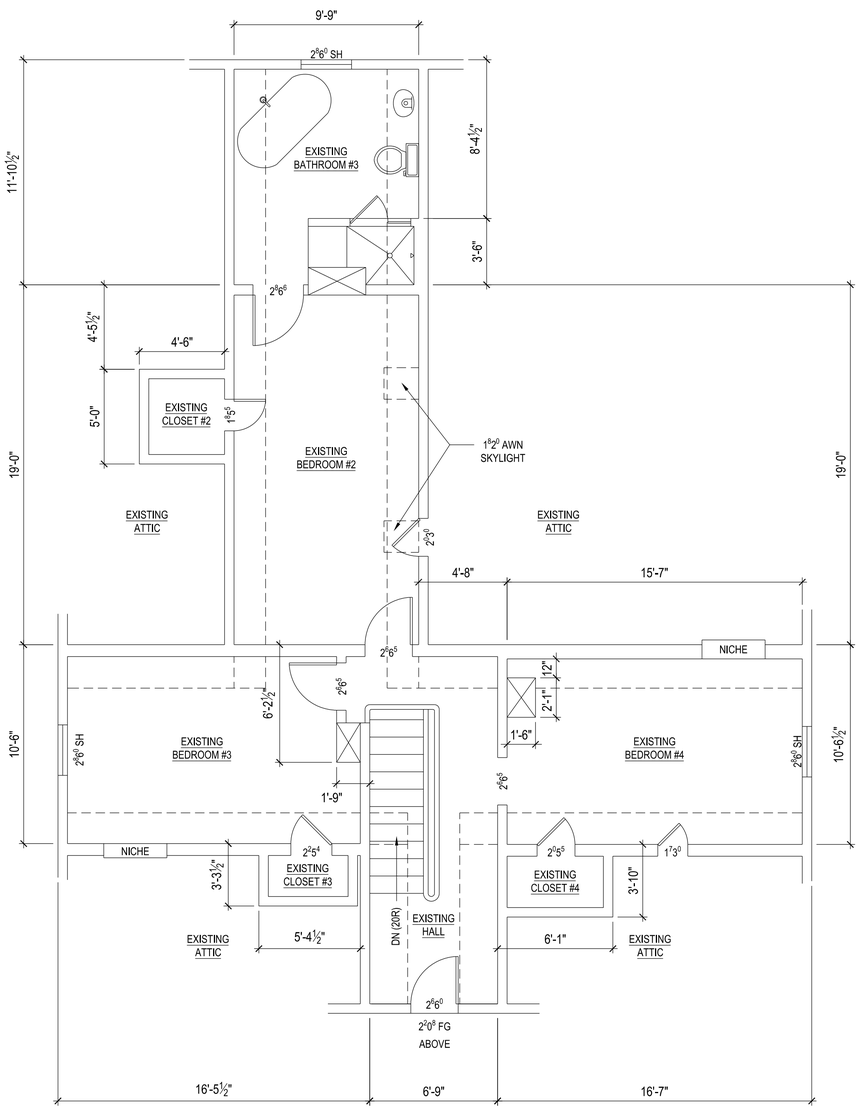

N 2 Existing Second Floor Plan

SCALE: 1/4" = 1'-0" SHEET SIZE: 34" x 22"

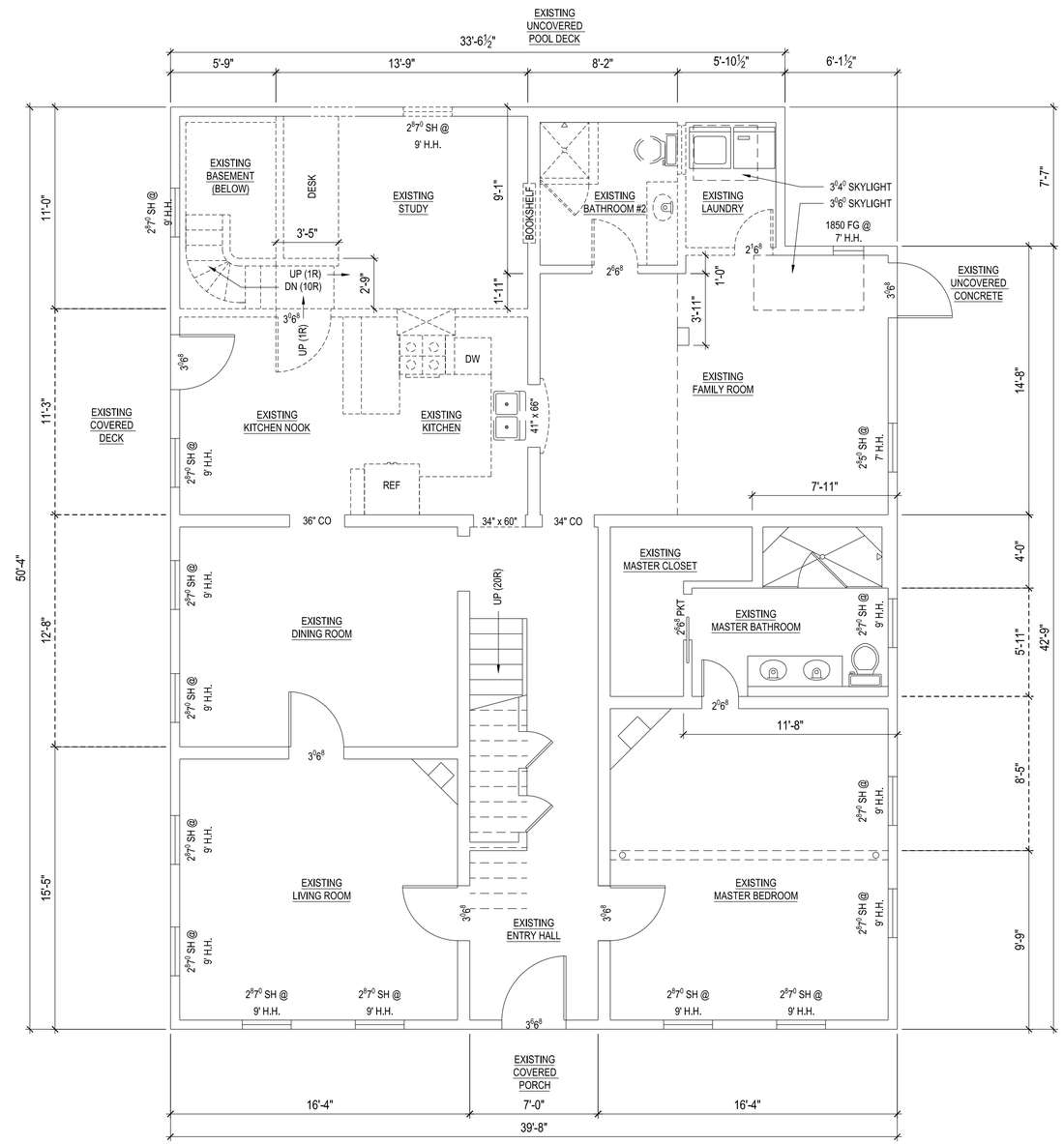

N 1 Existing First Floor Plan

SCALE: 1/4" = 1'-0" SHEET SIZE: 34" x 22"

STATE OF TEXAS
CHARLES A. WITT III
114625
REGISTERED PROFESSIONAL ENGINEER

THE SEAL APPEARING ON THIS DOCUMENT WAS AUTHORIZED BY CHARLES A. WITT III, P.E. 114625, ON 15 NOV. 2021.

Charles A. Witt III

Mark	Description	Date
1	100% DESIGN SUBMITTAL	15-NOV-21
2	UPDATE-1	20-JAN-22

ENGINEERING SOLUTIONS
650 SHELL STONE TRAIL
GEORGETOWN, TX 78628
C: 512-639-3131
CO. # F-15327

EXISTING FLOOR PLANS

1100 EAST 8TH STREET
AUSTIN, TX78702

SHEETNUMBER

A1

CONSTRUCTION NOTES

1. SEE NOTES ON SHEET A3.
2. REPLACE ALL EXISTING WINDOWS WITH NEW WINDOWS TO MATCH EXISTING WINDOWS IN TYPE, STYLE, GRILL, MATERIAL, DIMENSIONS, TRIM, AND HARDWARE. RE-USE EXISTING EXTERNAL SCREENS. NEW WINDOWS TO BE BUILT BY MARVIN (OR SIMILAR CUSTOM MANUFACTURER), DOUBLE PANE RATHER THAN SINGLE, AND TEMPERED WHERE NEEDED TO MEET CODE.
3. NEW BACK DOOR TO CLOSELY MATCH REPLACED WINDOW SIMILAR TO NOTE #2 ABOVE.

KEYED NOTES

A. TEMPERED GLASS FOR SHOWER OR TUB ENCLOSURES.
B. GLAZING AND WET SURFACES MUST BE IN COMPLIANCE WITH 2021 IRC SEC R308.4.5.

EXISTING WALLS TO REMAIN
WALL TO BE REMOVED
EXISTING WINDOW TO REMAIN
EXISTING WINDOW TO BE REMOVED
NEW WALLS
WINDOW ON NEW WALL

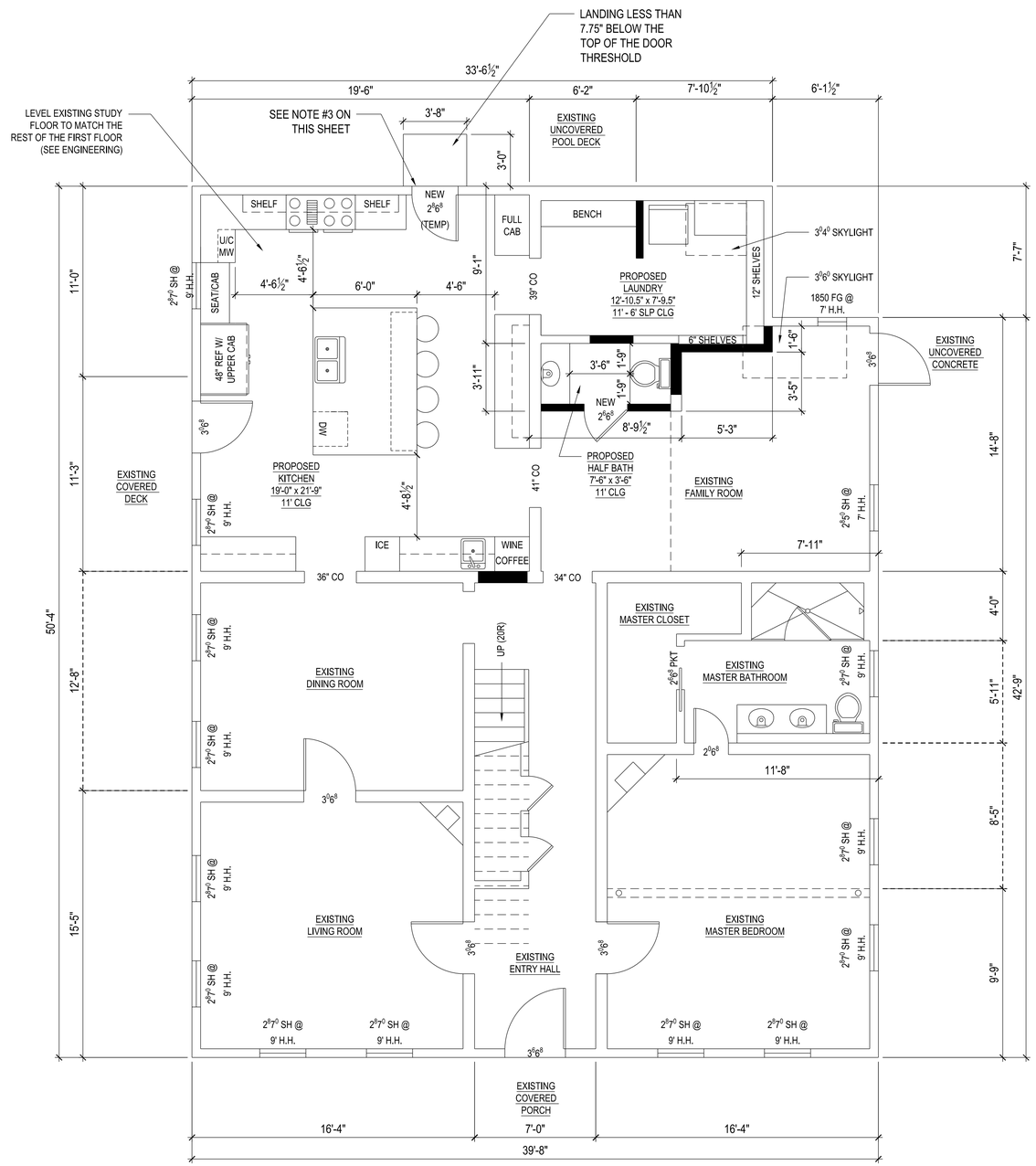

N 1 Proposed First Floor Plan

SCALE: 1/4" = 1'-0" SHEET SIZE: 34" x 22"

STATE OF TEXAS
CHARLES A. WITT III
114625
REGISTERED PROFESSIONAL ENGINEER

THE SEAL APPEARING ON THIS DOCUMENT WAS AUTHORIZED BY CHARLES A. WITT III, P.E. 114625, ON 15 NOV. 2021.

Charles A. Witt III

Mark	Description	Date
1	100% DESIGN SUBMITTAL	15-NOV-21
2	UPDATE-1	20-JAN-22

ENGINEERING SOLUTIONS
650 SHELL STONE TRAIL
GEORGETOWN, TX 78628
C: 512-639-3131
CO. # F-15327

PROPOSED FLOOR PLAN

1100 EAST 8TH STREET
AUSTIN, TX78702

SHEETNUMBER

A2

CONSTRUCTION NOTES

1. PROVIDE SMOKE ALARM SYSTEM - HARD WIRED, INTERCONNECTED, BATTERY BACKUP, AT EACH SLEEPING ROOM AND VICINITY, IF APPLICABLE AS WELL ON EACH ADDITIONAL STORY WITHIN THE DWELLING UNIT INCLUDING IN BASEMENTS. IN ACCORDANCE WITH 2021 IRC SEC R314.

2. GENERAL CONTRACTOR SHALL VERIFY FOR SMOKE ALARMS TO BE INSTALLED NOT LESS THAN 36" HORIZONTALLY FROM THE DOOR OR OPENING OF A BATHROOM THAT CONTAINS A BATHTUB OR SHOWER UNLESS THIS WOULD PREVENT PLACEMENT OF A SMOKE ALARM REQUIRED BY 2021 IRC SEC R314.3.

3. GENERAL CONTRACTOR SHALL VERIFY FOR SMOKE ALARM TO BE LOCATED AT LEAST 36" AWAY FROM HORIZONTAL PATH OF MECHANICAL AIR FLOW PER 2007 NFPA 72 CHAPTER 11.

4. APPROVED CARBON MONOXIDE ALARM SHALL BE INSTALLED OUTSIDE OF EACH SEPARATE SLEEPING AREA IN THE IMMEDIATE VICINITY OF THE BEDROOMS IN DWELLING UNITS WITHIN WHICH FUEL-FIRED APPLIANCES ARE INSTALLED AND IN DWELLING UNITS THAT HAVE ATTACHED GARAGES. IN ACCORDANCE WITH 2021 IRC SEC R315.1

5. PROVIDE CLOTHES DRYER EXHAUST SYSTEM AT LAUNDRY ENCLOSURES. PER IRC SECTION M1502.

6. PROVIDE TEMPERED GLASS FOR ALL GLASS ON EXTERIOR DOORS.

7. PROVIDE LOCAL EXHAUST SYSTEM FOR BATHROOM WITH NO WINDOWS OR FIXED WINDOWS. PER IRC SECTION R303.3.

8. PROVIDE MINIMUM 15 IN. CLEAR FROM CENTERLINE OF TOILET TO THE NEAREST WALLS/FIXTURES/CABINETS AND MINIMUM 24 IN. CLEAR IN FRONT. TOILET AND LAVATORY SHALL BE AT LEAST 30 IN. APART MEASURED AT THE CENTERLINE OF THE FIXTURES. SHOWERS SHALL HAVE A MINIMUM FINISHED INTERIOR OF 1,024 SQUARE IN., SHALL BE CAPABLE OF ENCOMPASSING A 30 IN. CIRCLE, AND SHALL HAVE A 24 IN. MINIMUM CLEARANCE IN FRONT OF OPENING. PER 2021 IRC R307.1 AND 2015 UPC.

4. EXTERIOR WALLS SHALL PROVIDE THE BUILDING WITH A WEATHER-RESISTANT EXTERIOR WALL ENVELOPE. THE EXTERIOR WALL ENVELOPE SHALL INCLUDE FLASHING, AS DESCRIBED IN SECTION 1405.4. THE EXTERIOR WALL ENVELOPE SHALL BE DESIGNED AND CONSTRUCTED IN SUCH A MANNER AS TO PREVENT THE ACCUMULATION OF WATER WITHIN THE WALL ASSEMBLY BY PROVIDING WATER-RESISTIVE BARRIER BEHIND THE EXTERIOR VENEER, AS DESCRIBED IN SECTION 1404.2, AND A MEANS FOR DRAINING WATER THAT ENTERS THE ASSEMBLY TO THE EXTERIOR. PROTECTION AGAINST CONDENSATION IN THE EXTERIOR WALL ASSEMBLY SHALL BE PROVIDED IN ACCORDANCE WITH SECTION 1405.3.

5. MATERIALS USED FOR THE CONSTRUCTION OF EXTERIOR WALLS SHALL COMPLY WITH SECTION 1404.1 AND NOT FEWER THAN ONE LAYER OF NO. 15 ASPHALT FELT, COMPLYING WITH ASTM D226 FOR TYPE 1 FELT OR OTHER APPROVED MATERIALS, SHALL BE ATTACHED TO THE STUDS OR SHEATHING, WITH FLASHING AS DESCRIBED IN SECTION 1405.4, IN SUCH A MANNER AS TO PROVIDE A CONTINUOUS WATER-RESISTIVE BARRIER BEHIND THE EXTERIOR WALL VENEER.

6. EXTERIOR WALLS SHALL COMPLY AS REQUIRED BY 2015 SECTION 1404.3.1 THROUGH 1404.3.2.

7. THE BUILDING THERMAL ENVELOPE SHALL COMPLY WITH THE REQUIREMENTS IN ACCORDANCE WITH 2021 IRC SEC R402.1.1 THROUGH R402.1.5.

8. UNLESS OTHERWISE NOTED, ALL STRUCTURAL FRAMING LUMBER SHALL BE CLEARLY MARKED NO. 2 YELLOW PINE OR DOUGLAS FIR.

9. ALL WOOD STUD WALLS SHALL BE FULL HEIGHT WITHOUT INTERMEDIATE PLATE LINE UNLESS DETAILED OTHERWISE.

10. PROVIDE DOUBLE STUDS AT ALL WALL CORNERS AND ON EACH SIDE OF ALL OPENINGS.

11. SOLID SHEATH ENTIRE BUILDING IN 7/16" OSB. PROVIDE 2X BLOCKING AS REQUIRED TO SUPPORT ALL PANEL EDGES. NAIL WITH 8D COMMON NAILS AT 6" ON CENTER AT SUPPORTED EDGES AND 12" ON CENTER AT INTERMEDIATE SUPPORTS.

12. ALL FRAMING MEMBERS FRAMING INTO THE SIDE OF A HEADER SHALL BE ATTACHED USING METAL JOIST HANGERS SIZED AND INSTALLED IN ACCORDANCE WITH THE MANUFACTURES RECOMMENDATIONS FOR THE SIZE OF JOIST SUPPORTED.

13. PLACE A SINGLE PLATE AT THE BOTTOM AND A DOUBLE PLATE AT THE TOP OF ALL STUD WALLS. EXTERIOR SILL PLATES SHALL BE BOLTED TO THE FOUNDATION WITH A 1/2" CONCRETE OR MASONRY ANCHOR BOLT. WOOD SHALL BE PRESSURE TREATED WITH A PRESERVATIVE. ALL HORIZONTAL PLATES SHALL BE #2 YELLOW PINE.

14. PROVIDE DOUBLE JOISTS UNDER ALL INTERIOR PARTITION WALLS ORIENTED PARALLEL TO THE JOISTS.

15. ALL BOLTS AND LAG SCREWS SHALL HAVE STANDARD WASHERS.

16. UNLESS OTHERWISE NOTED ON PLAN ALL HEADERS SHALL BE 2-#2 YP 2X8 FOR 2X4 WALLS AND TRIPLE 2X8 FOR 2X6 WALLS.

17. ALL WALLS WITH HEIGHT OVER 10'-0' SHALL BE FRAMED WITH 2X6 #2 STUDS. ALL STUDS SHALL BE FULL HEIGHT WITH NO INTERMEDIATE PLATE OR PRE-CUT STUDS. REFER TO TYPICAL WALL FRAMING DETAIL FOR STUD SIZE AND SPACING.

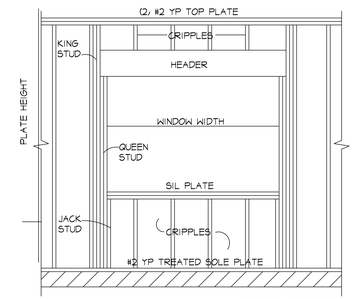

FRAMING DETAIL
SCALE: NTS

TYPICAL FRAMED OPENING SCHEDULE

WINDOW WIDTH	NUMBER OF STUDS AT EACH SIDE OF WINDOW			# SIL PLATE
	KING	QUEEN	JACK	
< 3'-11"	1	1	1	1
4'-0" to 6'-5"	2	1	1	1
6'-6" to 9'-0"	3	2	1	1
9'-1" to 11'-11"	4	2	1	2
12'-0" to 14'-8"	5	2	1	2

CHART 15 FOR 16" O.C. STUD SPACING.
DOUBLE ALL COUNTS FOR 8" O.C. SPACING

TYPICAL WALL FRAMING SCHEDULE

PLATE HEIGHT	SUPPORTING ROOF ONLY		SUPPORTING FLOOR AND ROOF	
	@ 16" O.C.	@ 8" O.C.	@ 16" O.C.	@ 8" O.C.
< 10'-2"	2x4	2x4	2x4	2x4
10'-2" to 14'-2"	2x6	2x4	2x6	2x6
14'-2" to 16'-2"	2x6	2x6	2x6	2x6
16'-2" to 20'-0"	N/A	2x6	N/A	2x6

ALL STUDS ARE SPF OR #2 YP.

STATE OF TEXAS
CHARLES A. WITT III
114625
REGISTERED PROFESSIONAL ENGINEER

THE SEAL APPEARING ON THIS DOCUMENT WAS AUTHORIZED BY CHARLES A. WITT III, P.E. 114625, ON 15 NOV. 2021.

Charles A Witt III

Mark	Description	Date
1	100% DESIGN SUBMITTAL	15-NOV-21
2	UPDATE-1	20-JAN-22

ENGINEERING SOLUTIONS
650 SHELL STONE TRAIL
GEORGETOWN, TX 78628
C: 512-639-3131
CO. # F-15327

PROPOSED FLOOR PLAN NOTES

1100 EAST 8TH STREET
AUSTIN, TX78702

SHEETNUMBER

A3

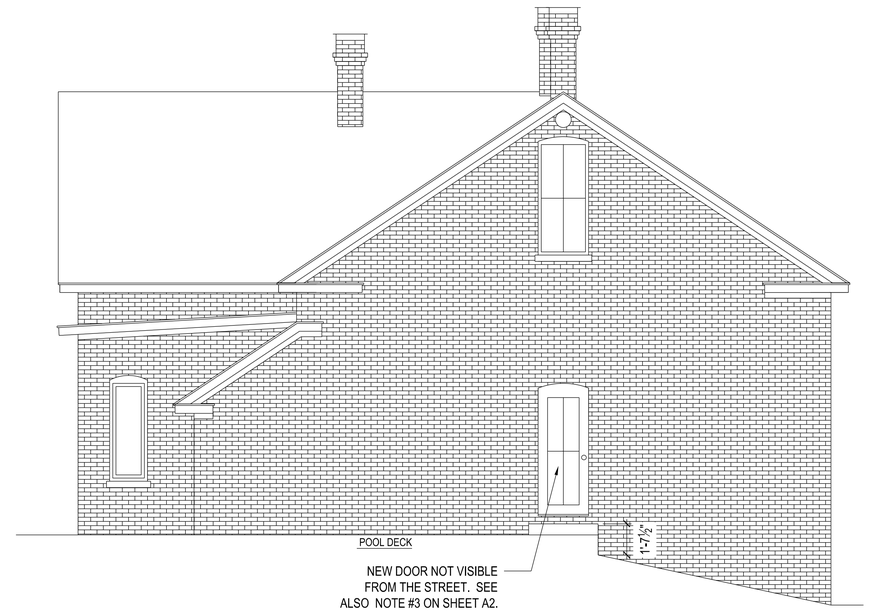

2 Proposed North Elevation

SCALE: 1/4" = 1'-0" SHEET SIZE: 34" x 22"

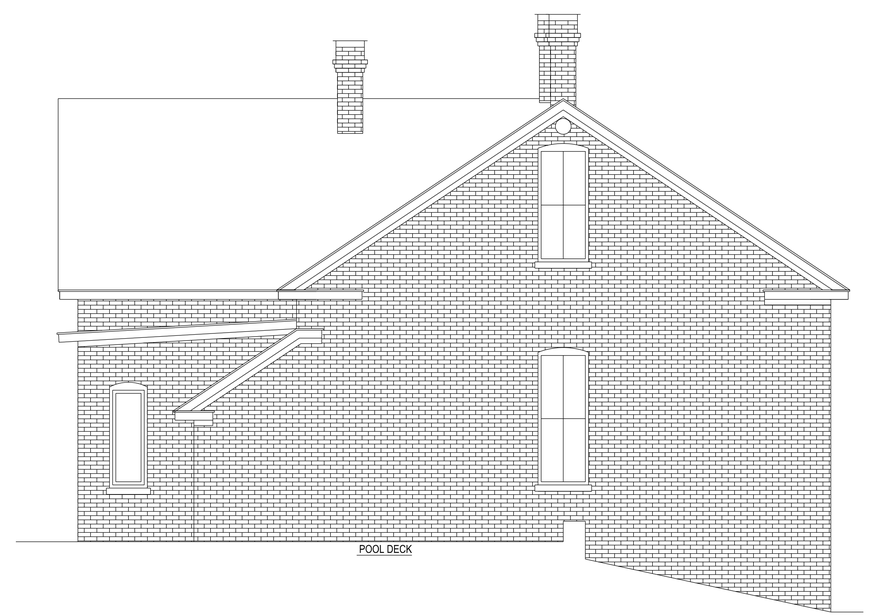

1 Existing North Elevation

SCALE: 1/4" = 1'-0" SHEET SIZE: 34" x 22"

STATE OF TEXAS
CHARLES A. WITT III
114625
REGISTERED
PROFESSIONAL ENGINEER

THE SEAL APPEARING ON THIS DOCUMENT WAS AUTHORIZED BY CHARLES A. WITT III, P.E. 114625. ON 15 NOV. 2021.

Charles A Witt III

Mark	Description	Date
1	100% DESIGN SUBMITTAL	15-NOV-21
2	UPDATE-1	20-JAN-22

ENGINEERING SOLUTIONS
650 SHELL STONE TRAIL
GEORGETOWN, TX 78628
C: 512-639-3131
CO. # F-15327

EXISTING / PROPOSED NORTH ELEVATIONS

1100 EAST 8TH STREET
AUSTIN, TX78702

SHEETNUMBER

A4