NOV 18 2022 AM 8:35

**RULE NO.: R161-22.15**

**NOTICE OF PROPOSED RULE** **POSTING DATE: 11/18/2022**

The Director of the Austin Transportation Department proposes to adopt the following rule on or after December 20, 2022.

## EFFECTIVE DATE OF PROPOSED RULE

A rule proposed in this notice may not become effective before the effective date established by a separate notice of rule adoption. A notice of rule adoption may not be posted before December 20, 2022 (the 32nd day after the date of this notice) or not after January 27, 2023 (the 70th day after the date of this notice).

If a proposed rule is not adopted on or before January 27, 2023, it is automatically withdrawn and cannot be adopted without first posting a new notice of a proposed rule.

## REQUEST FOR COMMENTS ON PROPOSED RULES

The City requests comments from the public with respect to the proposed rules included in this Notice. Comments must be submitted in writing to the contact person below no later than December 19, 2022 (the 31st day after the date of this notice).

**Contact Person:**
Brian D. Van De Walle
Austin Transportation Department

**U.S. Mail**
Brian D. Van De Walle
Austin Transportation - AMD
8900 Cameron Road
Austin, TX 78754

**Email:**
brian.vandewalle@austintexas.gov

**Phone:**
512-974-3958

## TEXT OF PROPOSED RULE

The text of the proposed rule, indicating changes from the current text, is attached to this notice.

## BRIEF EXPLANATION OF PROPOSED RULE

*R161-22.15*: Proposed revisions to the Standards Manual

- New Standard No. 832-1 "Rectangular Rapid Flashing Beacon" is being added to show construction details for the installation of a typical AC powered Rectangular Rapid Flashing Beacon
- New Standard No. 832-2 "RRFB Placement" is being added to show the location of signs, markings, ramps when installing RRFBs
- New Standard No. 832-3 "Solar Powered Rectangular Flashing Beacon" is being added to show construction details for the installation of a typical solar powered Rectangular Rapid Flashing Beacon
- New Standard No. 837-3 "Vehicle Detector Placement" is being added to show the size, location, and placement of stop bar and set back detection zones for traffic signals.
- New Standard No. 838-1 "Traffic Signal Electrical Notes" is being added to provide information and requirements for the wiring and grounding of a traffic signal that will be operated by the City of Austin.
- New Standard No. 838-2 "Traffic Signal Electrical Service" is being added to provide details on the electrical service requirements when connecting to the power utility at a traffic signal.
- New Standard No. 838-3 "Traffic Signal Phasing" is being added to provide information to signal contractors and signal timing engineers on the proper phase numbering and sequencing at a signal operated by the City of Austin.
- Standard No. 830S-1, "Foundation Details for Base Mounted Controller Cabinet" has been reformatted to 8 ½ inch x 11 inch sheets.
- Standard No.831-2 "Solar Powered Flasher Assembly" has been modified to provide additional details regarding the installation of solar powered flashers maintained by the City of Austin. All metric dimensions have been removed.
- Standard No.831-3 "Traffic Signal Pole Foundation" has been modified to include additional details for all pole types used on City of Austin owned traffic signals.
- Standard No. 835-1 "Trench Detail for Traffic Signal Conduit" has been modified to remove reference to metric dimensions.
- Standard No.839-6 "Pedestrian and Signal Wiring" has been reformatted to 8 ½ inch x 11 inch sheets.

## AUTHORITY FOR ADOPTION OF PROPOSED RULE

The authority and procedure for adoption of a rule to assist in the implementation, administration, or enforcement of a provision of the City Code is provided in Chapter 1-2 (Administrative Rules), Chapter 14-11 (Use of Right-of Way), and Chapter 15-7 (Use of City Owned Infrastructure).

## CERTIFICATION BY CITY ATTORNEY

By signing this Notice of Proposed Rule R161-22.15, the City Attorney certifies the City Attorney has reviewed the rule and finds that adoption of the rule is a valid exercise of the Director's administrative authority.

**REVIEWED AND APPROVED**

Richard Mendoza, Interim Director
Austin Transportation Department

Date: 11-15-22

Anne Morgan

Digitally signed by Anne Morgan
DN: cn=Anne Morgan, o=City of Austin, ou=Law Department, email=anne.morgan@austintexas.gov, c=US
Date: 2022.11.15 15:53:30 -06'00'

Anne L. Morgan
City Attorney

Date: 11/15/2022

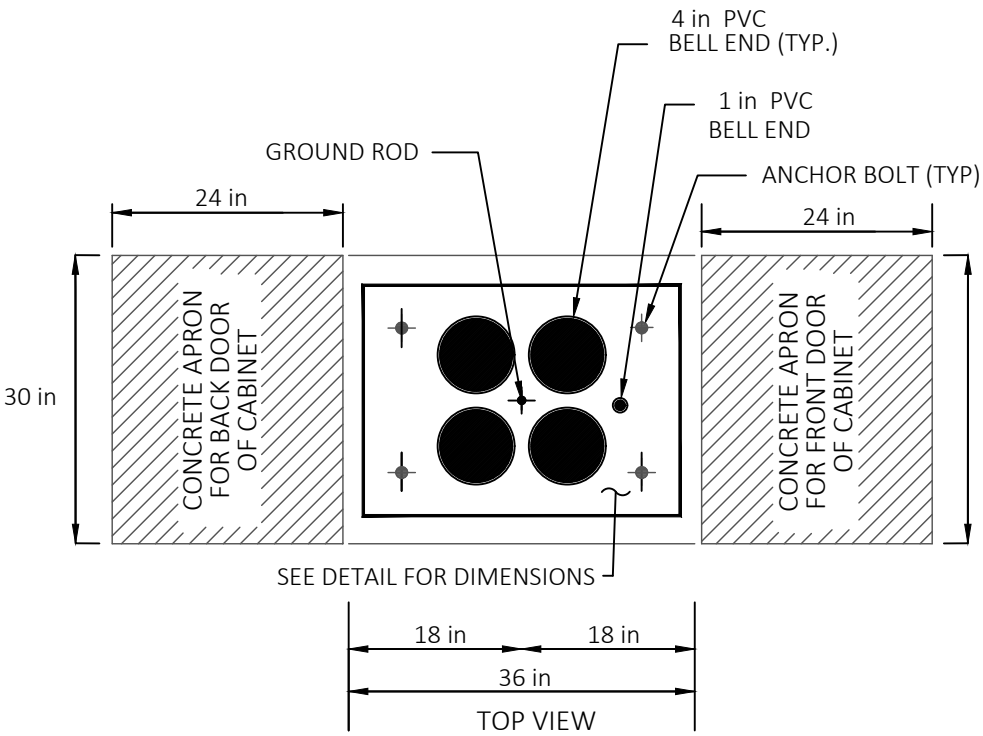


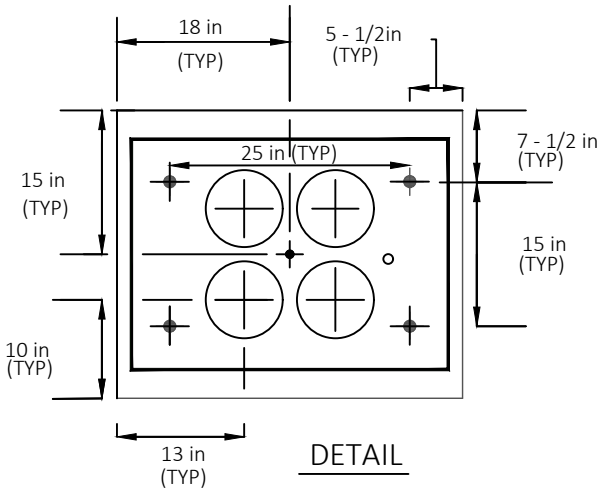


NOTES

1. ALL PORTLAND CEMENT CONCRETE SHALL BE CLASS A AS DEFINED IN STANDARD SPECIFICATION ITEM 403S "CONCRETE FOR STRUCTURES".
2. KEEP LOW VOLTAGE WIRING (I.E. PEDESTRIAN PUSHBUTTONS, VIDEO, ETC.) IN SEPARATE CONDUIT RUNS THAN THOSE WITH HIGHER VOLTAGES (IE 120 VAC)
3. PROVIDE SYSTEM GROUND AS DESCRIBED IN STANDARD CITY DETAIL TRAFFIC SIGNAL ELECTRICAL NOTES.

| CITY OF AUSTIN<br>DEPARTMENT OF PUBLIC WORKS | FOUNDATION DETAILS FOR<br>BASE MOUNTED CONTROLLER CABINET | |
|---|---|---|
| ADOPTED | THE ARCHITECT/ENGINEER ASSUMES RESPONSIBILITY FOR APPROPRIATE USE OF THIS STANDARD. | STANDARD NO.<br>830-1<br>1 OF 2 |

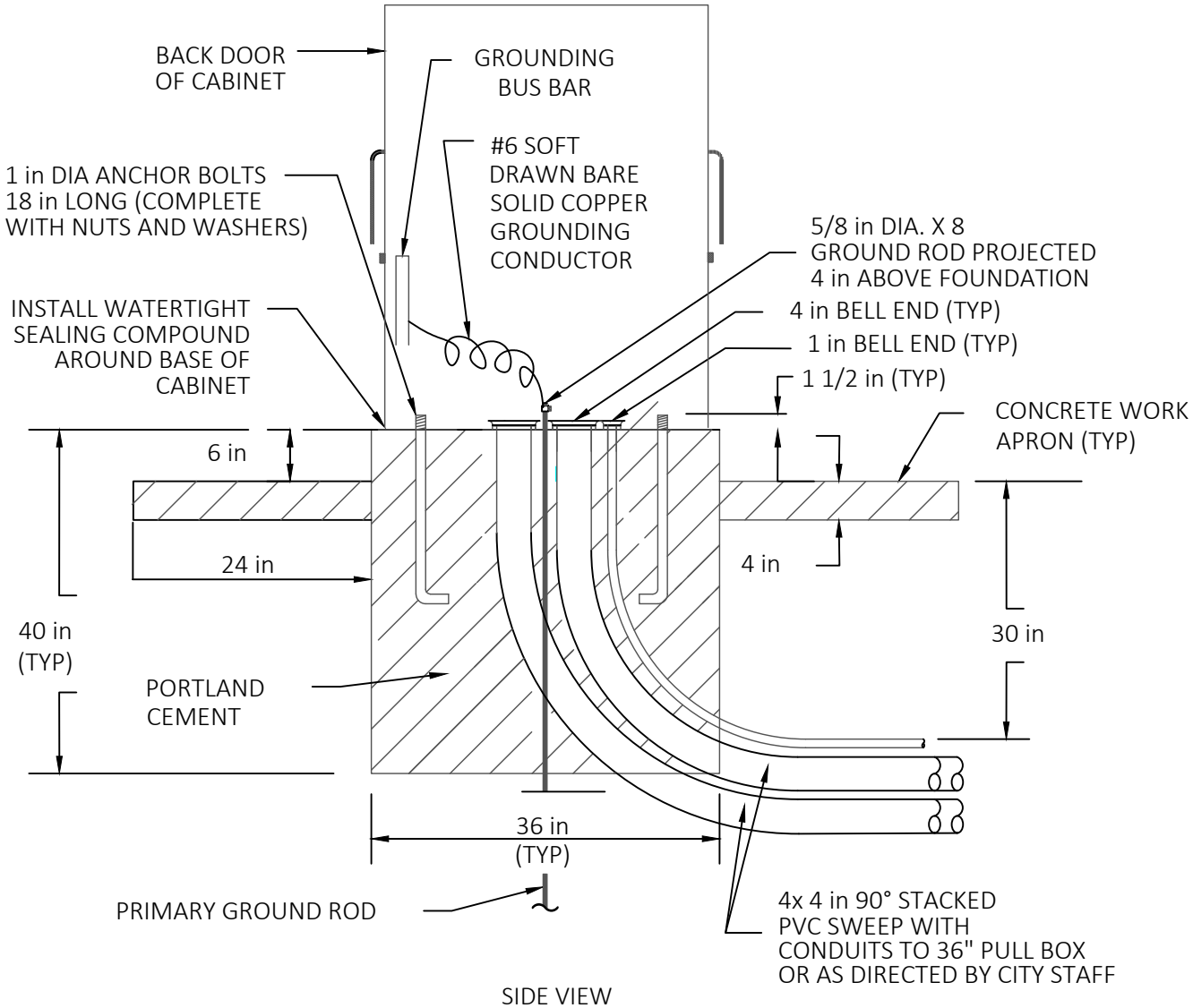


SIDE VIEW

| CITY OF AUSTIN<br>DEPARTMENT OF PUBLIC WORKS | FOUNDATION DETAILS FOR<br>BASE MOUNTED CONTROLLER CABINET | |
|---|---|---|
| ADOPTED | THE ARCHITECT/ENGINEER ASSUMES RESPONSIBILITY FOR APPROPRIATE USE OF THIS STANDARD. | STANDARD NO.<br>830-1<br>2 OF 2 |

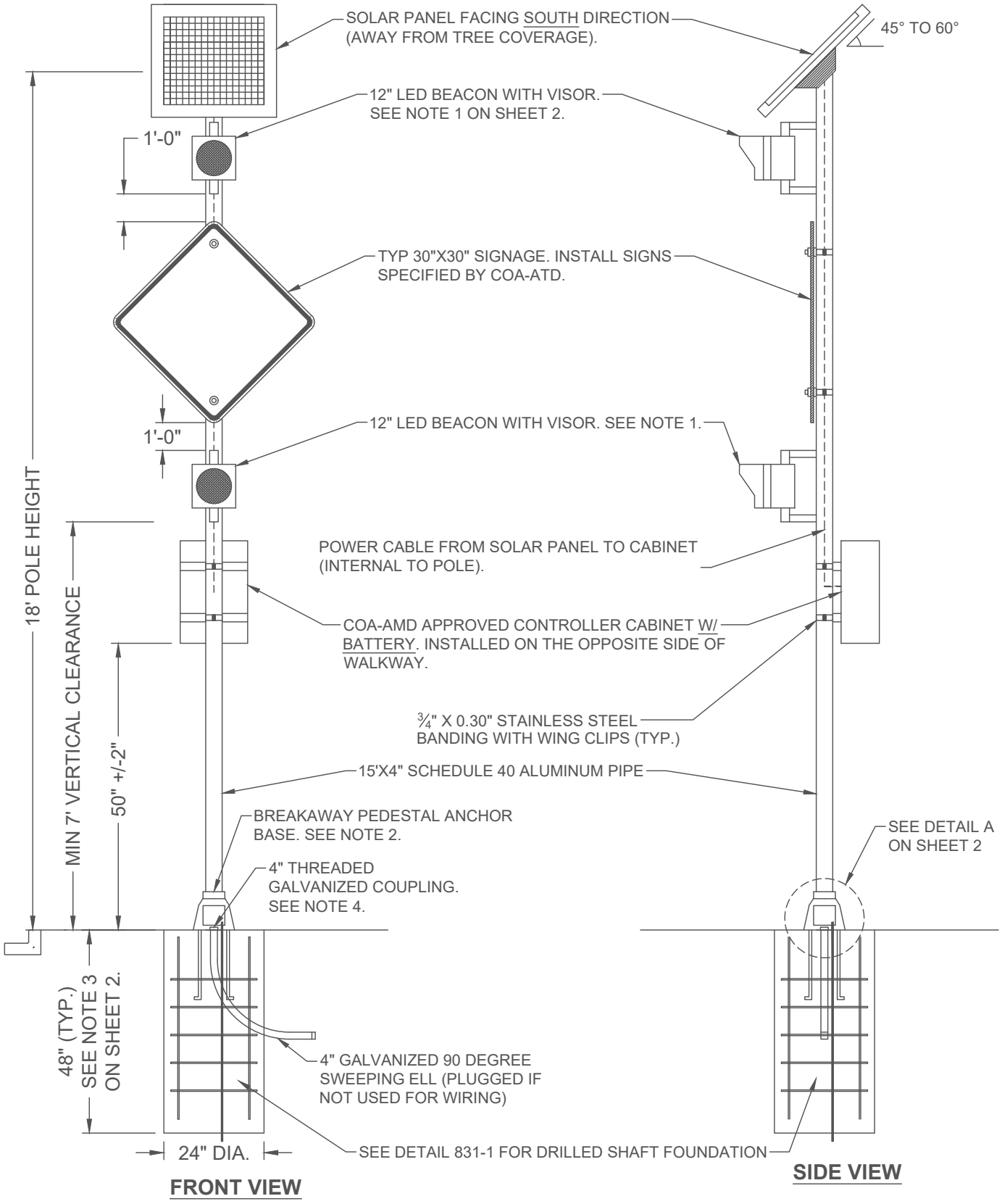


KEY:
COA - CITY OF AUSTIN
AMD - ARTERIAL MANAGEMENT DIVISION

| | | |
|---|---|---|
| CITY OF AUSTIN<br>DEPARTMENT OF PUBLIC WORKS | SOLAR POWERED FLASHER ASSEMBLY | |
| ADOPTED | THE ARCHITECT/ENGINEER ASSUMES RESPONSIBILITY FOR APPROPRIATE USE OF THIS STANDARD. | STANDARD NO.<br>831-2<br>1 OF 2 |

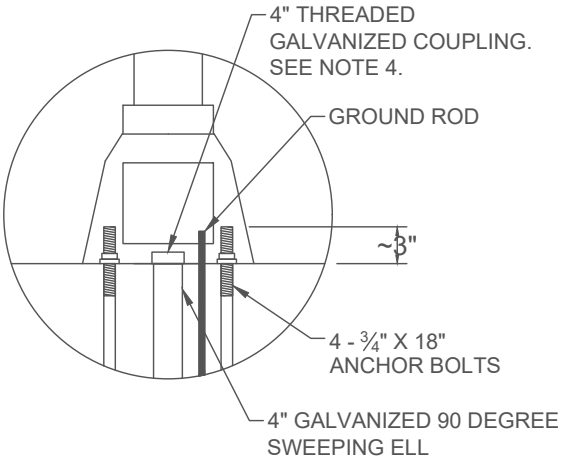


**DETAIL A**

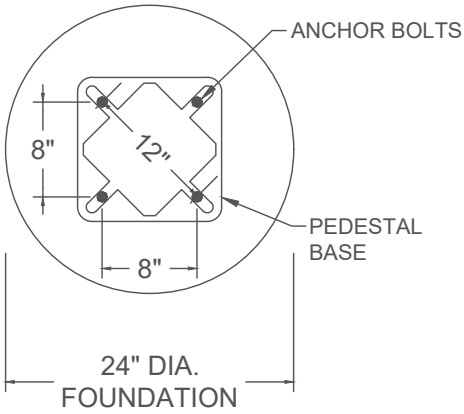


**BOLT CIRCLE DIMENSION**

NOTES:

1. SINGULAR MANUFACTURER SHALL SUPPLY THE BEACON.
2. ENGAGE ALL THREADS ON THE PEDESTAL BASE AND POLE TO PREVENT MOVEMENT OF THE POLE FROM HIGH WINDS.
3. ALTERNATE FOUNDATION DIMENSIONS MAY BE USED UPON CITY ENGINEER'S APPROVAL.
4. ENSURE COUPLING IS LEVEL AND PLUMB AND EXTENDS ABOVE THE SURFACE.

| | | |
|---|---|---|
| CITY OF AUSTIN<br>DEPARTMENT OF PUBLIC WORKS | SOLAR POWERED FLASHER ASSEMBLY | |
| ADOPTED | THE ARCHITECT/ENGINEER ASSUMES RESPONSIBILITY FOR APPROPRIATE USE OF THIS STANDARD. | STANDARD NO.<br>831-2<br>2 OF 2 |

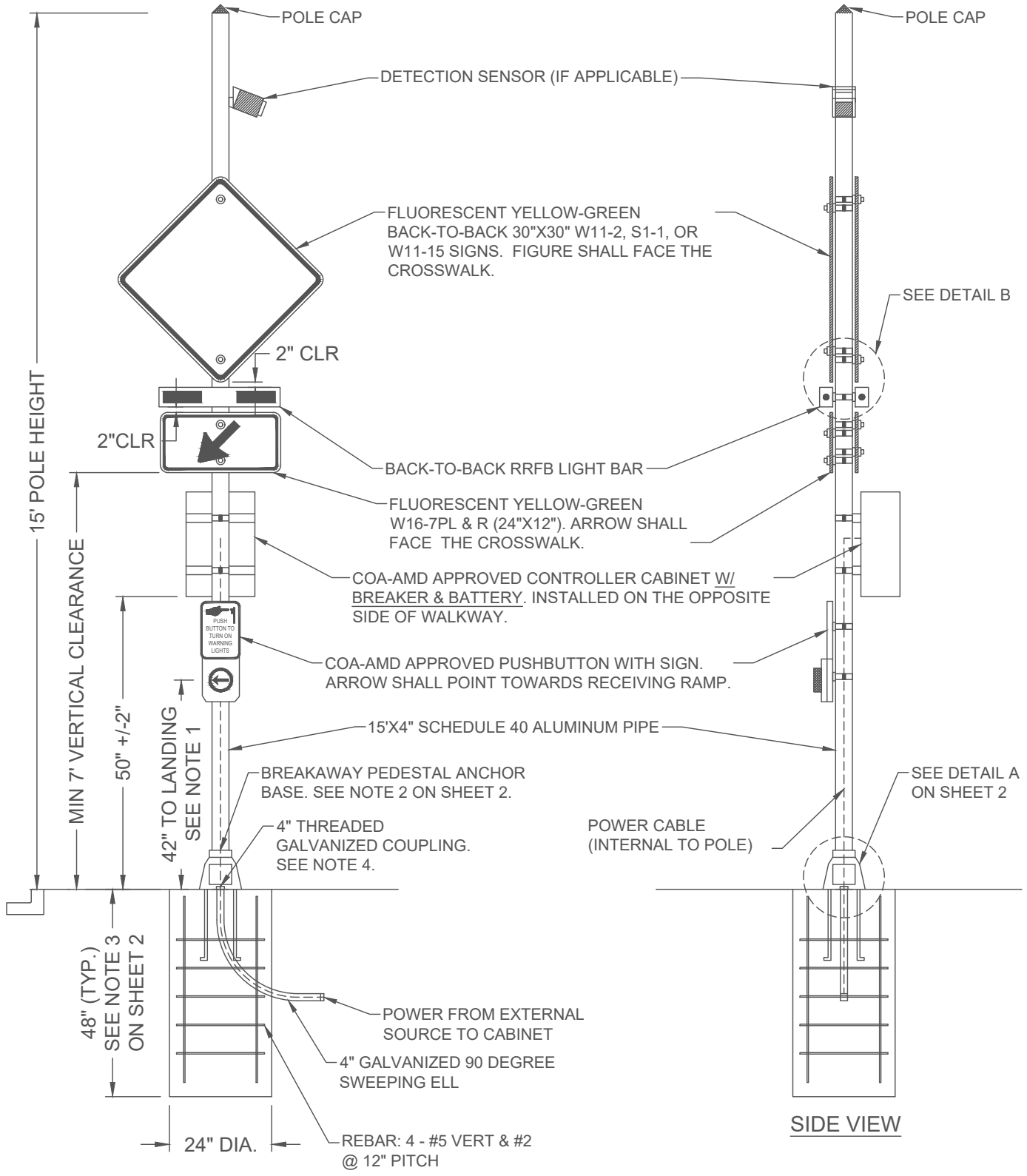


KEY:
COA - CITY OF AUSTIN
AMD - ARTERIAL MANAGEMENT DIVISION
RRFB - RECTANGULAR RAPID FLASHING BEACON

| | | |
|---|---|---|
| CITY OF AUSTIN<br>DEPARTMENT OF PUBLIC WORKS | RECTANGULAR RAPID FLASHING BEACON | |
| ADOPTED | THE ARCHITECT/ENGINEER ASSUMES RESPONSIBILITY FOR APPROPRIATE USE OF THIS STANDARD. | STANDARD NO.<br>832-1<br>1 OF 2 |

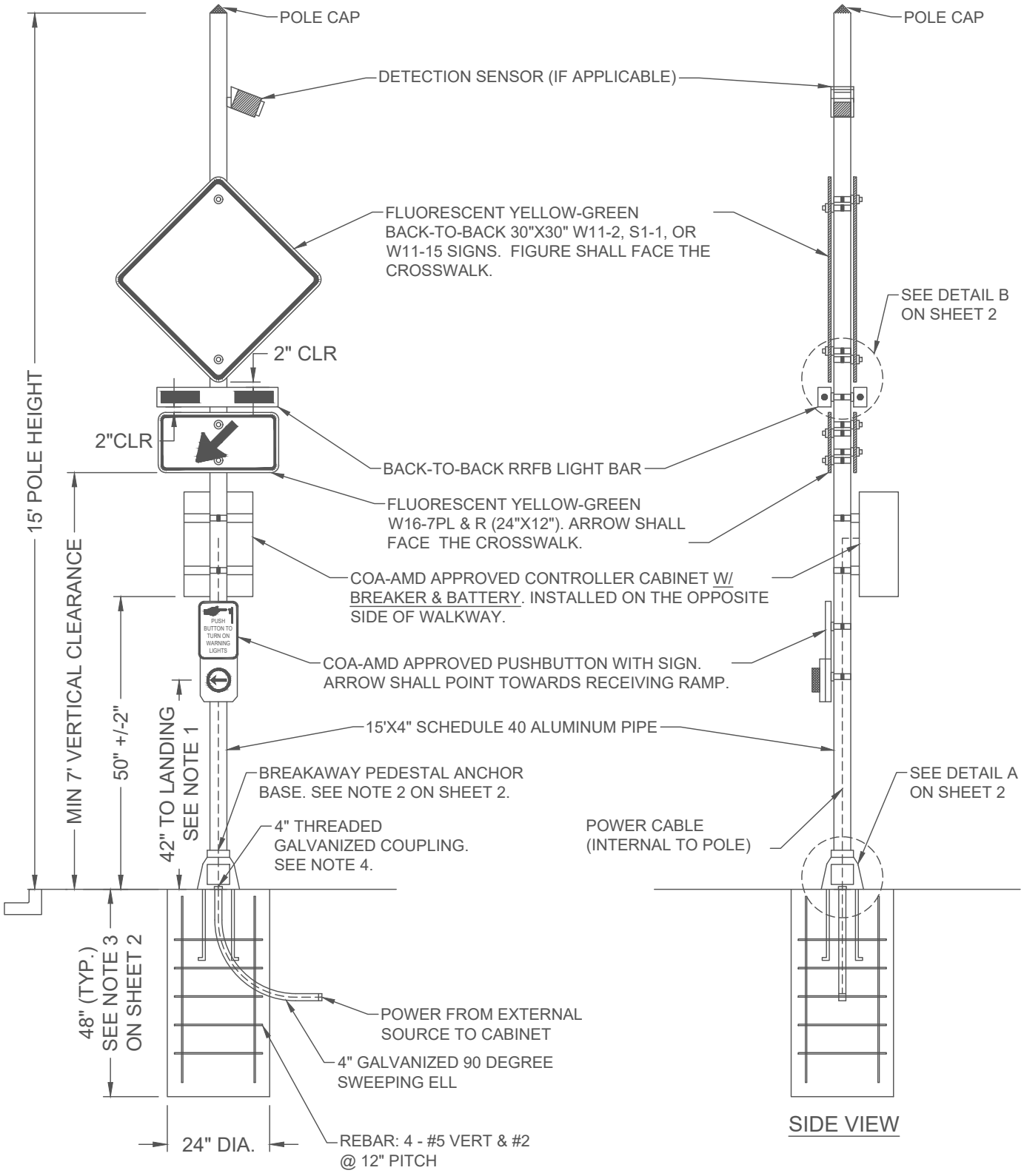


KEY:
COA - CITY OF AUSTIN
AMD - ARTERIAL MANAGEMENT DIVISION
RRFB - RECTANGULAR RAPID FLASHING BEACON

| | | |
|---|---|---|
| CITY OF AUSTIN<br>DEPARTMENT OF PUBLIC WORKS | RECTANGULAR RAPID FLASHING BEACON | |
| ADOPTED | THE ARCHITECT/ENGINEER ASSUMES RESPONSIBILITY FOR APPROPRIATE USE OF THIS STANDARD. | STANDARD NO.<br>832-1<br>1 OF 2 |

## DETAIL A

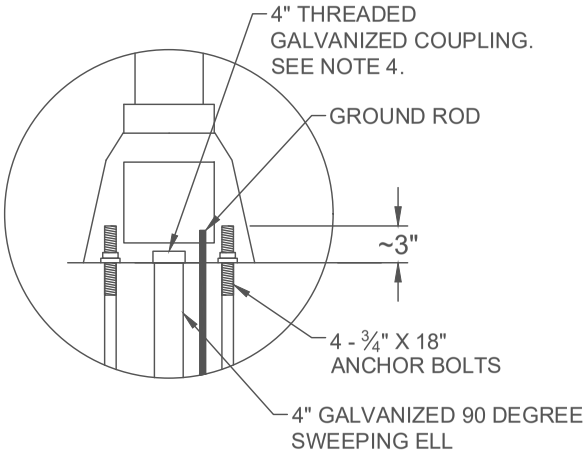


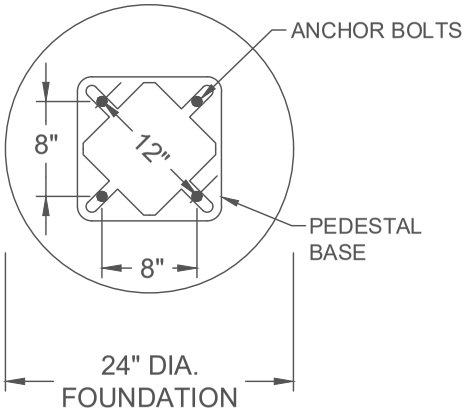


BOLT CIRCLE DIMENSION

## DETAIL B

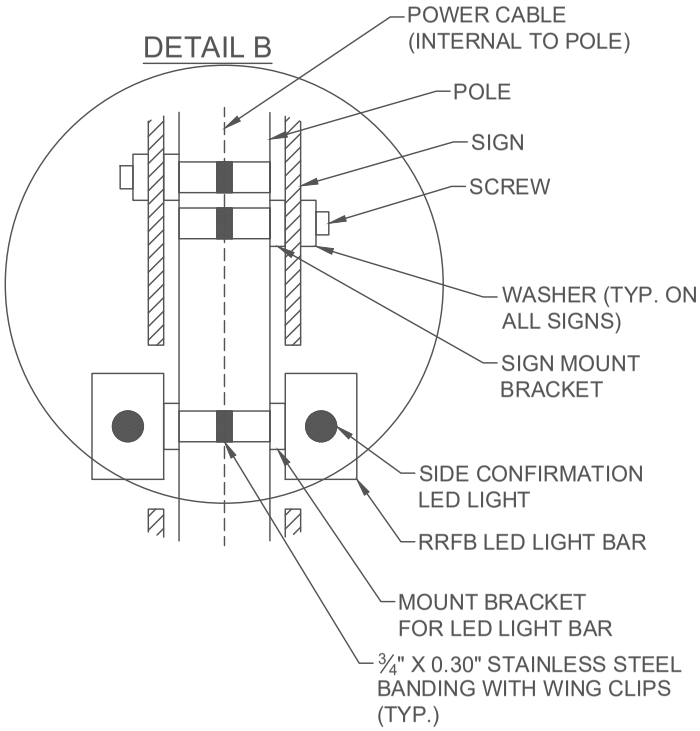


NOTES:

1. PUSH BUTTON HEIGHT IS MEASURED FROM THE ADJACENT LANDING NOT FROM THE BOTTOM OF THE POLE.
2. ENGAGE ALL THREADS ON THE PEDESTAL BASE AND POLE TO PREVENT MOVEMENT OF THE POLE FROM HIGH WINDS.
3. ALTERNATE FOUNDATION DIMENSIONS MAY BE USED UPON ENGINEER'S APPROVAL.
4. ENSURE COUPLING IS LEVEL AND PLUMB AND EXTENDS ABOVE THE SURFACE.

| CITY OF AUSTIN<br>DEPARTMENT OF PUBLIC WORKS | RECTANGULAR RAPID FLASHING BEACON | |
|---|---|---|
| ADOPTED | THE ARCHITECT/ENGINEER ASSUMES RESPONSIBILITY FOR APPROPRIATE USE OF THIS STANDARD. | STANDARD NO.<br>832-1<br>2 OF 2 |

RRFB CONSTRUCTION NOTES:

1. PRIOR APPROVAL FOR THE USE OF RRFBS MUST BE OBTAINED FROM THE CITY OF AUSTIN TRANSPORTATION ENGINEERING DIVISION.

2. REFER TO "MUTCD INTERIM APPROVAL 21 - RECTANGULAR RAPID FLASHING BEACONS AT CROSSWALKS" FOR THE LATEST REQUIREMENTS AND GUIDANCE.

3. ADA COMPLIANT PEDESTRIAN FACILITIES, INCLUDING RAMPS AND SIDEWALKS, MUST BE INSTALLED PRIOR TO RRFB ACTIVATION.

4. FINAL POLE/BUTTON LOCATION SHALL MEET THE ADA REQUIREMENT FOR USER REACH AND HEIGHT FROM THE ADJACENT LANDING.

5. RECTANGULAR RAPID FLASHING BEACONS (RRFBS) ARE SUPPLEMENTAL TO THE CROSSWALK, THEREFORE, THE CROSSWALK MUST BE MARKED BEFORE RRFBS ARE OPERATIONAL. THE RRFB MUST BE READY FOR ACTIVATION IMMEDIATELY UPON INSTALLATION OF THE CROSSWALK

6. RRFB INSTALLATIONS MUST BE INSPECTED AND APPROVED BY THE AUSTIN TRANSPORTATION DEPARTMENT ARTERIAL MANAGEMENT DIVISION PRIOR TO ACTIVATION.

7. THE REQUIREMENT FOR PROVIDING ADVANCE WARNING SIGNS WILL BE DETERMINED BY THE TRANSPORTATION ENGINEERING DIVISION

8. THE NEED FOR AND PLACEMENT OF STOP BARS WILL BE DETERMINED BY THE TRANSPORTATION ENGINEERING DIVISION

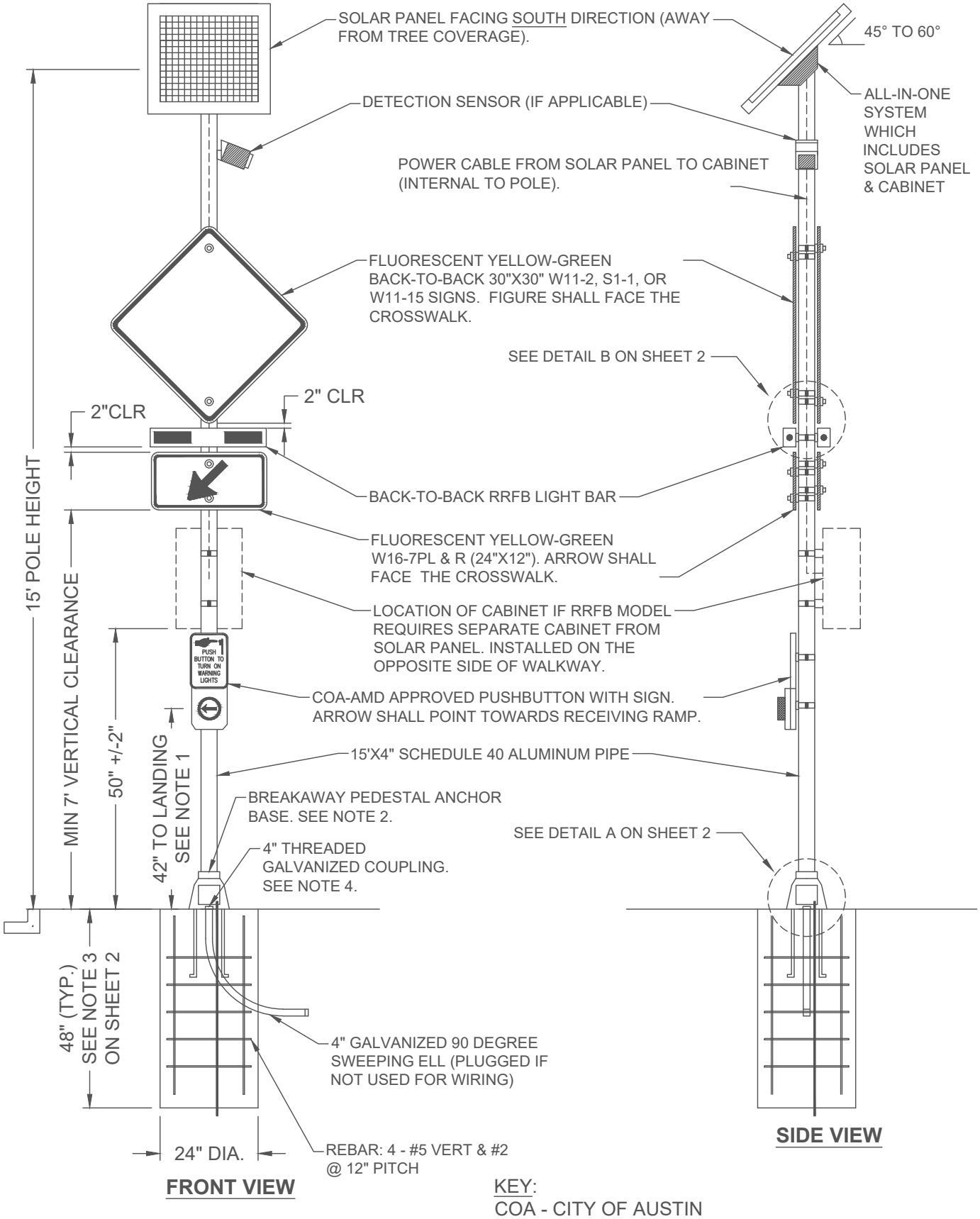


KEY:
COA - CITY OF AUSTIN
AMD - ARTERIAL MANAGEMENT DIVISION
RRFB - RECTANGULAR RAPID FLASHING BEACON

| | | |
|---|---|---|
| CITY OF AUSTIN<br>DEPARTMENT OF PUBLIC WORKS | SOLAR POWERED RECTANGULAR RAPID FLASHING BEACON | |
| ADOPTED | THE ARCHITECT/ENGINEER ASSUMES RESPONSIBILITY FOR APPROPRIATE USE OF THIS STANDARD. | STANDARD NO.<br>832-3<br>1 OF 2 |

## DETAIL B

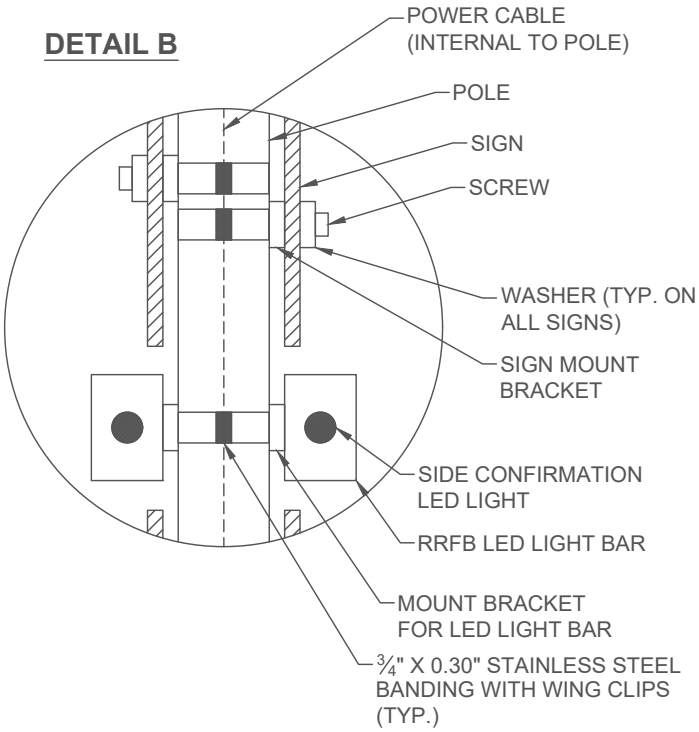


## DETAIL A

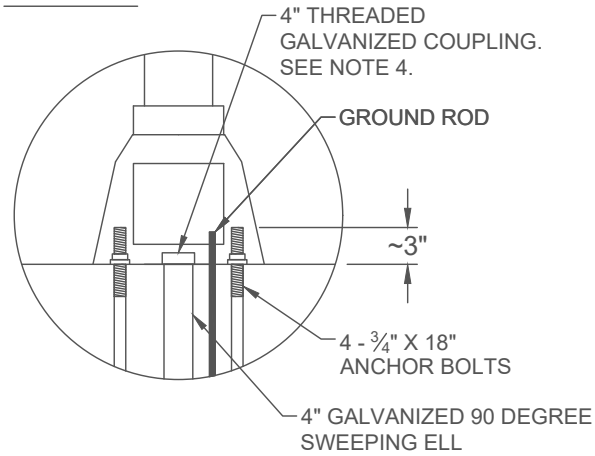


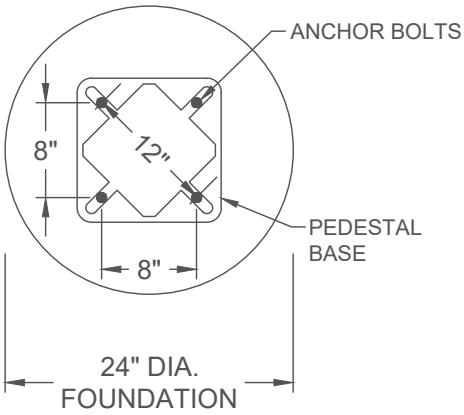


## BOLT CIRCLE DIMENSION

NOTES:

1. PUSH BUTTON HEIGHT IS MEASURED FROM THE ADJACENT LANDING NOT FROM THE BOTTOM OF THE POLE.
2. ENGAGE ALL THREADS ON THE PEDESTAL BASE AND POLE TO PREVENT MOVEMENT OF THE POLE FROM HIGH WINDS.
3. ALTERNATE FOUNDATION DIMENSIONS MAY BE USED UPON CITY ENGINEER'S APPROVAL.
4. ENSURE COUPLING IS LEVEL AND PLUMB AND EXTENDS ABOVE THE SURFACE.

| CITY OF AUSTIN<br>DEPARTMENT OF PUBLIC WORKS | SOLAR POWERED RECTANGULAR RAPID FLASHING BEACON | |
|---|---|---|
| ADOPTED | THE ARCHITECT/ENGINEER ASSUMES RESPONSIBILITY FOR APPROPRIATE USE OF THIS STANDARD. | STANDARD NO.<br>832-3<br>2 OF 2 |

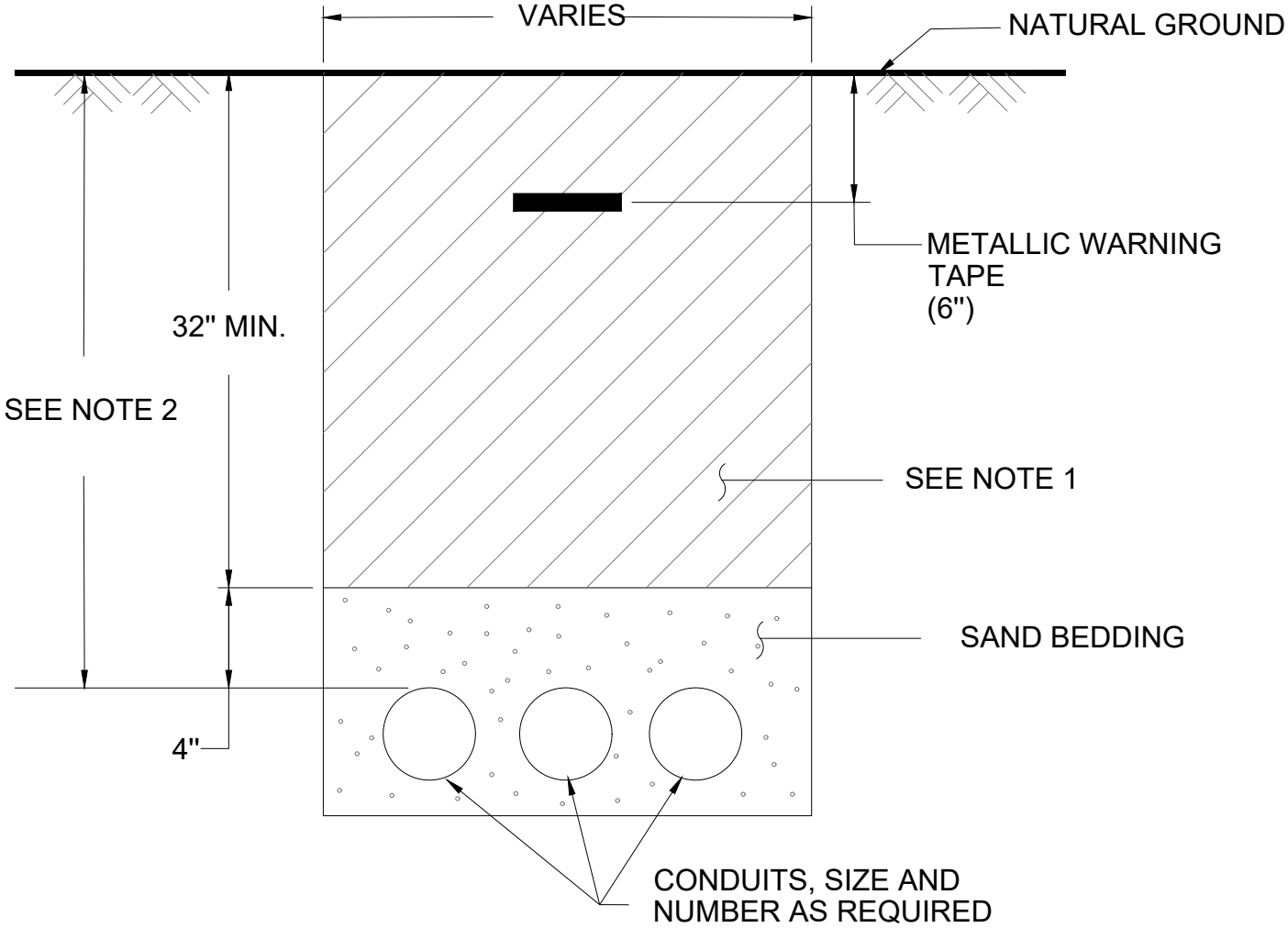


NOTES:

1. BACKFILL FOR TRENCHING BEHIND THE CURB (OR EDGE OF SHOULDER WHERE NO CURB EXISTS) SHALL BE COMPACTED TO THE DENSITY OF THE SURROUNDING SOIL. BACKFILL FOR OPEN CUT TRENCHING IN STREETS, DRIVEWAYS, SIDEWALKS OR MEDIANS SHALL CONFORM TO ALL REQUIREMENTS CONTAINED IN THE CITY OF AUSTIN'S UTILITY CRITERIA MANUAL.
2. DEPTH OF CONDUIT SHALL BE A MINIMUM OF 36" FROM TOP OF PIPE TO FINISHED GRADE EXCEPT WHERE CONDUIT IS INSTALLED OR LOWERED AS PART OF A ROAD-WAY IMPROVEMENT PROJECT. THE CONDUIT DEPTH SHALL BE EITHER 36" FROM FINISHED GRADE OR 18" BELOW THE BOTTOM OF THE FINAL ROADWAY SUBGRADE, WHICHEVER IS GREATER.

| CITY OF AUSTIN<br>DEPARTMENT OF PUBLIC WORKS | TRENCH DETAIL FOR<br>TRAFFIC SIGNAL CONDUIT | |
|---|---|---|
| ADOPTED | THE ARCHITECT/ENGINEER ASSUMES RESPONSIBILITY FOR APPROPRIATE USE OF THIS STANDARD. | STANDARD NO.<br>835-1 |

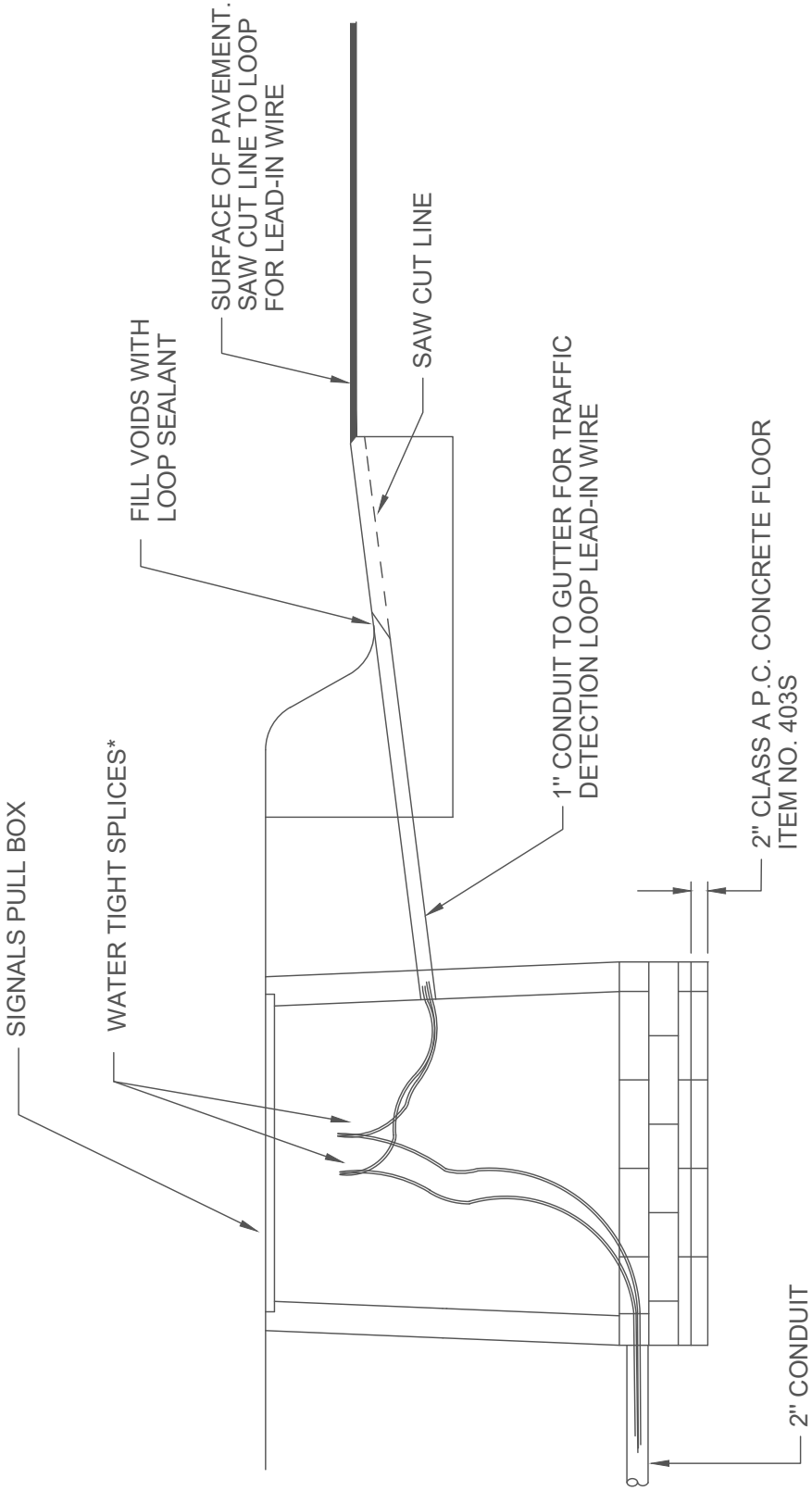


*NOTE: SOLDER AND SEAL ALL SPLICES WITH WATER TIGHT WRAPPING.

| CITY OF AUSTIN<br>DEPARTMENT OF PUBLIC WORKS | LOOP DETECTOR LEAD-IN WIRE DETAIL | |
|---|---|---|
| ADOPTED | THE ARCHITECT/ENGINEER ASSUMES RESPONSIBILITY FOR APPROPRIATE USE OF THIS STANDARD. | STANDARD NO.<br>837-2 |

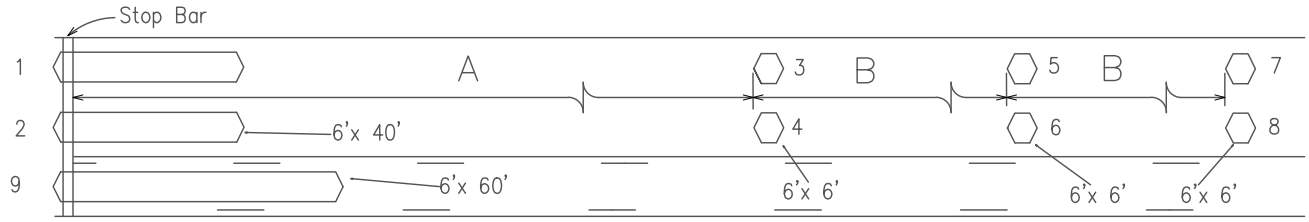


55 MPH ( A=225', B=95' ) 60 MPH ( A=275', B=100' )
65 MPH ( A=320', B=110' ) 70 MPH ( A=350', B=125' )

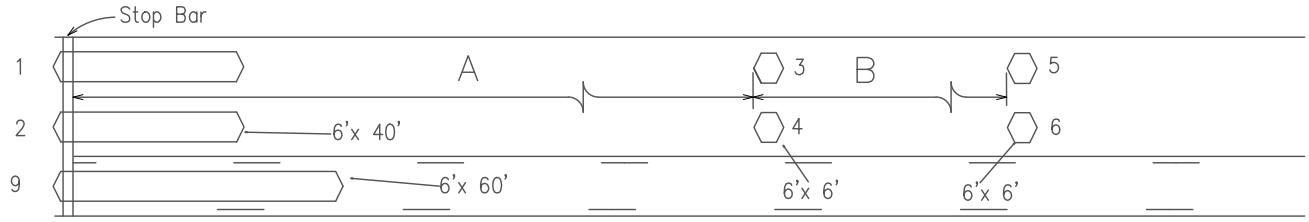


35 MPH ( A=90', B=100' ) 40 MPH ( A=110', B=130' )
45 MPH ( A=175', B=115' ) 50 MPH ( A=220', B=130' )

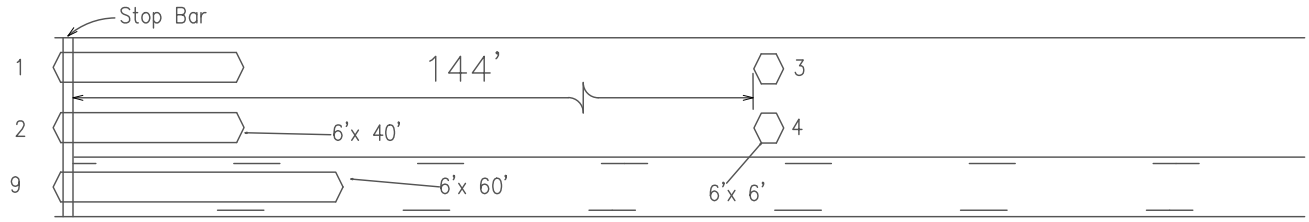


30 MPH

| CITY OF AUSTIN<br>DEPARTMENT OF PUBLIC WORKS | VEHICLE DETECTOR PLACEMENT | |
|---|---|---|
| ADOPTED | THE ARCHITECT/ENGINEER ASSUMES RESPONSIBILITY FOR APPROPRIATE USE OF THIS STANDARD. | STANDARD NO.<br>837-3 |

I. GENERAL NOTES AND DETAILS FOR ALL TRAFFIC SIGNAL ELECTRICAL WORK

1. The location of all conduits, junction boxes, ground boxes, and electrical services is diagrammatic and may be shifted to accommodate field conditions, with approval from the City.

2. Provide new and unused materials. Ensure that all materials and installations comply with the applicable articles of the National Electrical Code (NEC), City standards and specifications, National Electrical Manufacturers Association (NEMA), and are listed by Underwriters Laboratories (UL) or a Nationally Recognized Testing Lab (NRTL). NRTLs such as Canadian Standard Association (CSA), Intertek Testing Services NA Inc., or FM Approvals LLC can be considered equivalent to UL. Where reference is made to NEMA listed devices, International Electrotechnical Commission (IEC) listed devices will not be considered an acceptable equal to a NEMA listed device. Acceptable devices may have both a NEMA and IEC listing. Faulty fabrication or poor workmanship in any material, equipment, or installation is justification for rejection. Replace or reinstall rejected material or equipment at no additional cost to the City.

3. Miscellaneous nuts, bolts and hardware, except for high strength bolts, may be stainless steel when plans specify galvanized, provided the bolt size is 1/2 in. or less in diameter.

4. Provide the following test equipment to confirm compliance with the construction contract and the NEC: voltmeter, ammeter, megohm meter (1000 volt DC), ground resistance tester, torque wrenches, and torque screwdrivers. Ensure all equipment has been properly calibrated within the last year. Provide calibration certification to the Engineer upon request. Operate test equipment during inspection as requested by the Engineer.

5. Install grounding as shown on the plans and in accordance with the NEC. Ensure all metallic conduits; metal poles; luminaires; and metal enclosures are bonded to the equipment grounding conductor. Provide stranded bare copper or green insulated grounding conductors. Ground rods, connectors, and bonding jumpers are subsidiary to the various bid items.

6. Notify the City in writing of materials intended for use on each project. Provide product specifications for materials as requested.

II. CONDUIT

A. MATERIALS

1. Provide galvanized steel RMC for all exposed conduits, unless otherwise shown on the plans. Properly bond all metal conduits.

2. Junction boxes with an internal volume of less than 100 cu. in. and supported by entering raceways must have threaded entries or hubs identified for the intended purpose and supported by connection of two or more rigid metal conduits. Secure conduit within 3 ft. of the enclosure or within 18 in. of the enclosure if all conduit entries are on the same side. Mechanically secure all junction boxes with an internal volume greater than 100 cu. inches.

3. Provide hot dipped galvanized cast iron or sand cast aluminum outlet boxes for junction boxes containing only 10 AWG or 12 AWG conductors. Do not use die cast aluminum boxes. Size outlet boxes according to the NEC.

4. Do not use intermediate metal conduit (IMC) or electrical metallic tubing (EMT) unless specifically required by the plan sheets. When EMT is called for, provide junction boxes made from galvanized steel sheeting, listed and approved for outdoor use, unless otherwise noted on the plans. Size all galvanized steel junction boxes in accordance with the NEC. Provide junction boxes for IMC conduit systems that meet the same requirements for junction boxes used with RMC systems.

5. Provide PVC junction boxes intended for outdoor use on PVC conduit systems, unless otherwise noted on the plans.

6. Provide PVC elbows in PVC conduit systems, unless otherwise shown on the plans. Use only a flat, high tensile strength polyester fiber pull tape for pulling conductors through the PVC conduit system. When galvanized steel RMC elbows are specifically called for in the plans and any portion of the RMC elbow is buried less than 18 in., ground the RMC elbow by means of a grounding bushing on a rigid metal extension. Grounding of the rigid metal elbow is not required if the entire RMC elbow is encased in a minimum of 2 in. of concrete. PVC extensions are allowed on these concrete encased rigid metal elbows. RMC or PVC elbows are subsidiary to various bid items.

B. CONSTRUCTION METHODS

1. Provide and install expansion joint conduit fittings on all structure-mounted conduits at the structure's expansion joints to allow for movement of the conduit. In addition, provide and install expansion joint fittings on all continuous runs of galvanized steel RMC conduit externally exposed on structures such as bridges at maximum intervals of 150 ft. When requested by the engineer, supply manufacturer's specification sheet for expansion joint conduit fittings. Repair or replace expansion joint fittings that do not allow for movement at no additional cost to the City. Provide the method of determining the amount of expansion to the engineer upon request. Do not use LFMC or LFNC as a substitute for the required expansion conduit fittings.

2. Space all conduit supports at maximum intervals of 5 ft. Install conduit spacers when attaching metal conduit to surface of concrete structures. See "Conduit Mounting Options" on TxDOT Detail Sheet ED(2). Install conduit support within 3 ft. of all enclosures and conduit terminations.

3. Do not attach conduit supports directly to pre-stressed concrete beams except as shown specifically in the plans or as approved by the engineer.

4. Install Trenched Conduit in accordance with the City's latest Details. Provide and place warning tape in the trench as shown in the City detail.

5. Unless otherwise shown on the plans, jack or bore conduit placed beneath 1) existing roadways, driveways, sidewalks, or 2) after the base or surfacing operation has begun. Backfill and compact the bore pits below the conduit prior to installing conduit or duct cable to prevent bending of the connections.

6. When placing conduit in the sub-grade of new roadways, backfill all trenches with excavated material unless otherwise noted on the plans. When placing conduit in the sub-base of new roadways, backfill all trenches with cement-stabilized base as per requirements of Items 100 "Earthwork" and 200 "Subgrade and Base Construction"

7. During construction, temporarily cap or plug open ends of all conduit and raceways immediately after installation to prevent entry of dirt, debris and animals. Temporary caps constructed of durable duct tape are allowed. Tightly fix the tape to the conduit opening. Clean out the conduit and prove it clear in accordance with Item 618 prior to installing any conductors.

8. Ensure conduit entry into the top of any enclosure is waterproof by installing conduit sealing hubs or using boxes with threaded bosses. This includes surface mounted safety switches, meter cans, service enclosures, auxiliary enclosures and junction boxes. Grounding bushings on water tight sealing hubs are not required.

9. Fit the ends of all PVC conduit terminations with bushings or bell end fittings. Provide and install a grounding type bushing on all metal conduit terminations.

10. Install a bonding jumper from each grounding bushing to the nearest ground rod, grounding lug, or equipment grounding conductor. Ensure all bonding jumpers are the same size as the equipment grounding conductor. Bonding of conduit used as a casing under roadways for duct cable is not required, if the duct extends the full length through the casing.

11. At all electrical services, install a 6 AWG solid copper grounding electrode conductor.

12. Seal ends of all conduits with duct seal, expandable foam, or by other methods approved by the Engineer. Seal conduit immediately after completion of conductor installation and pull tests. Do not use duct tape as a permanent conduit sealant. Do not use silicone caulk as a conduit sealant.

13. File smooth the cut ends of all mounting struts and conduit. Before installing, paint the field cut ends of all mounting strut and RMC (threaded or non-threaded) with zinc rich paint (94% or more zinc content) to alleviate overspray. Use zinc rich paint to touch up galvanized material as allowed in City Specifications and Detail Sheets. Do not paint non-galvanized material with a zinc rich paint as an alternative for materials required to be galvanized.

III. ELECTRICAL CONDUCTORS

A. MATERIAL INFORMATION

1. Provide Type XHHW insulated conductors. Color code insulated conductors in conformance with the NEC. Identify grounded (neutral) conductors with white insulation. Identify grounding conductors (ground wires) with green insulation or bare conductors. Identify ungrounded (hot) conductors with any color insulation except green, white, or gray. Keep color scheme consistent throughout the wiring system. Identify conductors 6 American Wire Gauge (AWG) and smaller by continuous color jacket. Identify electrical conductors 4 AWG and larger by continuous color jacket or by colored tape. When identifying conductors with colored tape, mark at least 6 in. of the conductor's insulation with half laps of tape.

2. Provide a solid copper 6 AWG grounding electrode conductor to bond the electrical service equipment to the concrete encased grounding electrode or the ground rod at the service location. Connect the grounding electrode conductor to the ground rod with a UL listed connector. Connect the grounding electrode conductor to the concrete encased grounding electrode as shown in the plans.

3. Where two or more circuits are present in one conduit or enclosure, permanently identify the conductors of each branch circuit by attaching a non-metallic tag around both circuit conductors at each accessible location. Provide tags with two straps, large enough to indicate circuit number, letter, or other identification as shown in the plans. Print circuit identification on the tag with a permanent marker.

4. Use listed taped butt splices, terminal blocks, or split bolt connectors for splicing. Use electrical tape for each individual splice and for all of the splices together to seal the connection a minimum of 2 inches from the end of the cut insulation. Splicing materials, breakaway disconnects, splice covers, and fuse holders are subsidiary to various bid items.

B. CONSTRUCTION METHODS

1. Use only a flat, high tensile strength polyester fiber pull tape for pulling conductors through the conduit system. After installing conductors in conduit, perform conductor pull test. If a conductor cannot be freely pulled, make any needed alterations or repairs at no additional cost to the City. Perform insulation resistance tests when required by the City. Ensure that each continuous run of insulated conductor has a minimum DC resistance of 5 Megohms when tested at 1,000 volts DC. Coordinate with the City to witness the tests.

2. Leave 6 ft. length of conductor in ground boxes. Leave 1.5 ft. length of conductor at enclosures, weatherheads and pole bases.

3. Make splices only in junction boxes, ground boxes, pole bases, or electrical enclosures and use only diapered butt splices for one to one splices or split bolt connectors for many to one splices. Insulate splices with electrical tape, followed by rubber tape, then another layer of electrical tape to provide a watertight splice. Overlap conductor insulation with electrical tape a minimum of 2 in. past both sides of the splice.

4. For connections to source power, an insulated multi-tap (block) connector may be used.

5. Wire nuts with factory applied waterproof sealant may be used for 8 AWG or smaller conductors in above ground junction boxes, but not in pole bases or ground boxes. Install wire nuts in an upright position to prevent the accumulation of water.

6. When terminating conductors, remove the insulation and jacketing material without nicking the individual strands of the conductor. Conductors with nicked individual conductor strands or removed strands will be considered damaged.

7. Replace conductors and cables that are damaged beyond repair or that fail an insulation resistance test at no additional cost to the City.

8. Do not repair damaged conductors with duct tape or wire nuts. Use only approved splicing methods.

9. Do not terminate more than one conductor under a single connector, unless the connector is rated for multiple conductors. Do not exceed the pressure connector's listing for maximum number and size of conductors allowed.

10. Install breakaway connectors on conductors whenever those conductors pass through a breakaway support device. Follow manufacturer's instructions when terminating conductors to breakaway connectors. Properly torque threaded connections. Proper terminations are critical to the safe operation of breakaway devices. Trim waterproofing boots on breakaway connectors to fit snugly around the conductor to ensure waterproof connection. Only one conductor may enter a single opening in a boot. Provide waterproof bboots with the correct number of openings. Leave unused openings factory sealed.

11. Provide and install a separate stranded equipment grounding conductor in all conduits that contain circuit wiring of 50 volts or more. Unless shown elsewhere, size the EGC to be the same size as the largest current carrying conductor contained in the conduit. Ensure all EGCs are bonded together at every accessible location. For traffic signal installations, provide a minimum size 8 AWG EGC.

C. TEMPORARY WIRING

1. Install temporary conductors and electrical equipment in accordance with the NEC article "Temporary Installations" and City standard sheets.
2. Provide a ground fault circuit interrupter (GFCI) for power outlets for portable electrical equipment, power tools, ice machines, ice storage bins and refrigerators located outdoors at grade. GFCI may be any one of the following: molded cord and plug set, receptacle, or circuit breaker type.
3. Use listed wire nuts with factory applied sealant for temporary wiring where approved.
4. Enclose conductor splices within a listed enclosure or ground box, or ensure the splices are more than 10 ft. above grade vertically and more than 5 ft. horizontally from any metal structure. Where installing temporary conductors in areas subject to vehicle traffic or mobile construction equipment, ensure the vertical clearance to ground is at least 18 ft. when measured at the lowest point. Ground messenger wires that support power conductors in conformance with the NEC.
5. Protect and when necessary repair any existing electrical conduits uncovered during the construction process in a timely manner and in conformance with the NEC.

IV. GROUND RODS & GROUNDING ELECTRODES

A. MATERIAL INFORMATION

1. Provide and install a 5/8" X 8' grounding rod, at electrical services and as called for in the plans. Larger diameter or longer length rods may be called for in some specific locations, see the individual plans sheets. Concrete encased grounding electrodes may be called for in specific locations including the electrical service, see individual plan sheets.

B. CONSTRUCTION METHODS

1. Furnish auxiliary ground rods and/or grounding plates for lightning protection and install in soil, concrete, or both, as called for in the plans. For ground rods installed in concrete, ensure the connection of the conductor to the ground rod is readily accessible for inspection or repairs. For ground rods installed in soil, ensure that the upper end is between 2 to 4 in. below finished grade.
2. Do not place ground rods in the same drilled hole as a timber pole.
3. Install ground rods so the imprinted part number is at the upper end of the rod.
4. Remove all non-conductive coatings such as concrete splatter from the rod at the clamp location.
5. Route all conductors as short and straight as possible for connection to lightning protection ground rods. When a bend is required, ensure a minimum radius bend of four inches for these conductors.
6. Unless otherwise called for in the plans, protect grounding electrode conductors with non-metallic conduit. When protecting grounding electrode conductors with metal conduit, provide and install a grounding type bushing and properly sized bonding jumper on each end of the metal conduit.
7. Written authorization is required before installing a ground rod in a horizontal trench for rocky soil or a solid rock bottom.

V. TRAFFIC SIGNAL ELECTRICAL SERVICES NOTES

1. Provide new materials. Ensure installation and materials comply with the applicable provisions of the National Electrical Code (NEC) and National Electrical Manufacturers Association (NEMA) standards. Ensure material is Underwriters Laboratories (UL) listed. Provide and install electrical service conduits, conductors, disconnects, contactors, circuit breaker panels, and branch circuit breakers as shown on the Electrical Service Data chart in the plans. Faulty fabrication or poor workmanship in material, equipment, or Installation is justification for rejection. Where manufacturers Provide warranties and guarantees as a customary trade practice, furnish these to the Engineer.
2. Provide all work, materials, services, and any incidentals needed to install a complete electrical service as specified in the plans.

SPLICE OPTION 1 - Butt Splice

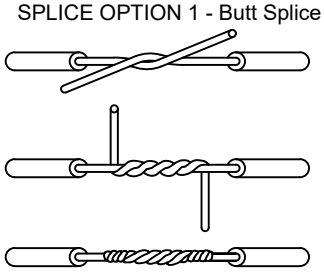

SPLICE OPTION 2 - Split Bolt Type

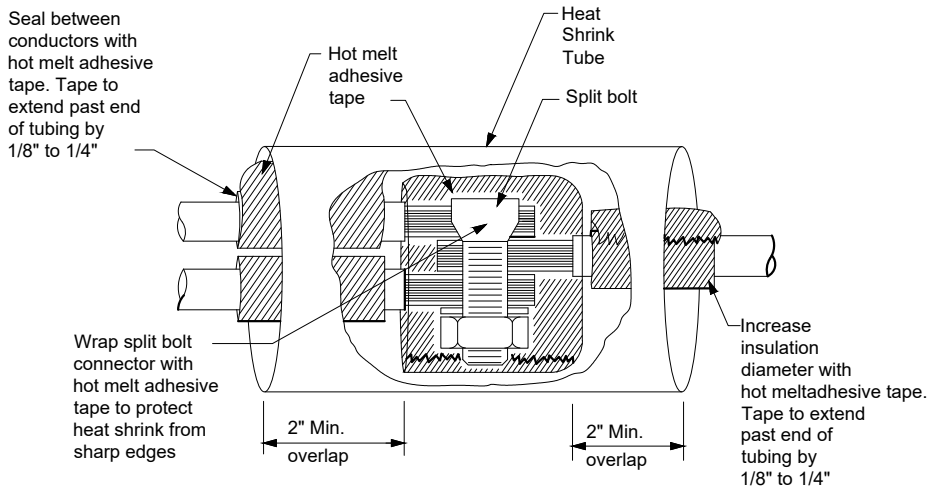


SPLICE OPTION 3
Insulated Multitap Connector (Block)

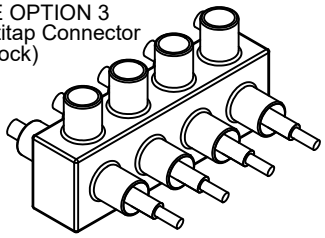

| CITY OF AUSTIN<br>DEPARTMENT OF PUBLIC WORKS | TRAFFIC SIGNAL ELECTRICAL NOTES AND DETAILS | |
|---|---|---|
| ADOPTED | THE ARCHITECT/ENGINEER ASSUMES RESPONSIBILITY FOR APPROPRIATE USE OF THIS STANDARD. | STANDARD NO.<br>838-1<br>4 OF 8 |

3. Coordinate with the Engineer and the utility provider for metering and compliance with utility requirements. Primary line extensions, connection charges, meter charges, and other charges by the utility company to provide power to the location are paid for the entity that owns the signal. Get approval for the costs associated with these charges prior to engaging the utility company to do the work. Consult with the utility provider to determine costs and requirements, and coordinate the work as approved.
4. The enclosure manufacturer will provide Master Lock Type 2 with brass tumblers keyed #3540 for all custom electrical enclosures. Installing Contractor is to provide Master Lock #3540 Type 2 with brass tumblers for "off the shelf" enclosures. Master Lock #3540 keys and locks become property of the City. Unless otherwise approved, do not energize electrical service equipment until locks are installed.
5. When galvanized is specified for nuts, screws, bolts or miscellaneous hardware, stainless steel may be used.
6. Provide wiring and electrical components rated for 75°C. Provide red, black, and white colored XHHW service entrance conductors of minimum size 6 American Wire Gauge (AWG). Identify size 6 AWG conductors by continuous color jacket. Identify electrical conductors sized 4 AWG and larger by continuous color jacket or by colored tape. Mark at least 6 inches of the conductor's insulation with half laps of colored tape, when identifying conductors. Ensure each service entrance conductor exits through a separately bushed on-metallic opening in the weatherhead. The lengths of the conductors outside the weatherhead are to be 12 inches minimum, 18 inches maximum, or as required by utility.
7. All electrical service conduit and conductors attached to the electrical service including the riser or the elbow below ground are subsidiary to the electrical service. For an underground utility feed, all service conduit and conductors after the elbow, including service conduit and conductors for the utility pole riser when furnished by the Contractor, will be paid for separately.
8. Provide rigid metal conduit (RMC) for all conduits on service, except for the 1/2 in. PVC conduit containing the electrical service grounding electrode conductor. Size the service entrance conduit as shown in the plans. Extend all rigid metal conduits a minimum of 6 inches underground and then couple to the type and schedule of the conduit shown on the layout for that particular branch circuit. Install a grounding bushing on the RMC where it terminates in the service enclosure.
9. Ensure all mounting hardware and installation details of services conform to utility company specifications.
10. When providing an "Off The Shelf" service, provide laminated plan sheets detailing equipment and branch circuits supplied by that service. Reduce 11 in. x 17 in. plan sheets to 8 1/2 in. x 11 in before laminating. Deliver these drawings before completion of the work to the Engineer, instead of placing in enclosure that has no door pocket.
11. Do not install conduit in the back wall of a service enclosure where it would penetrate the equipment mounting panel inside the enclosure. Provide grounding bushings on all metal conduits, and terminate bonding jumpers to grounding bus. Grounding bushings are not required when the end of the metal conduit is fitted with a conduit sealing hub or threaded boss, such as a meter base hub.

## VI. GROUND PULL BOXES

### A. MATERIALS

1. Provide ground boxes compliant with the most recent City of Austin standard details 834S-1, 834S-2, 834S-3, 834S-4, 834S-5, 834S-6,834S-7, and 834S-8.
2. Provide Type A, B, C, and D ground boxes as shown in the plans.
3. Ensure each ground box cover is correctly labeled.
4. Provide larger ground boxes, approved by the Engineer, if called for in the plans.

### B. CONSTRUCTION METHODS

1. Remove all gravel and dirt from conduit. Cap all conduits prior to placing aggregate and setting ground box. Ensure aggregate bed is in place and at east 9 inches deep, prior to setting the ground box. Install ground box on top of aggregate. Aggregate should not intrude into the ground box enclosure.
2. Install all conduits and ells in a neat and workmanlike manner. Uniformly space conduits so grounding bushings and bell end fittings can easily be installed.
3. Temporarily seal all conduits in the ground box until conductors are installed.
4. Permanently seal conduits immediately after the completion of conductor installation and pull tests. Permanently seal the ends of all conduits with duct seal, expandable foam, or other method as approved. Do not use duct tape as a permanent conduit sealant. Do not use silicone caulk as a sealant.
5. When a ground rod is present in a ground box, bond all equipment grounding conductors together and to the ground rod with listed connectors.
6. If an existing ground box in the contract has a metal cover, bond the cover to the equipment grounding conductor with a 3 ft. long stranded bonding jumper the same size as the grounding conductor. The bonding jumper is subsidiary to various bid items. Verify existing ground boxes with metal covers are shown on the plans, with notes fully describing the work required.
7. If other ground boxes with metal covers are within the project limits but are not part of the contract, the Engineer may direct the Contractor to bond the metal covers, identifying the specific boxes in writing. This work will be paid for separately.
8. Bond metal ground box covers to the grounding conductor with a tank ground type lug.
9. Uniformly space ends of conduits within the ground box. Position ends of conduits so that ground box walls do not interfere with the installation of grounding bushings or bell end fittings.
10. Maintain sufficient space between conduits to allow for proper installation of bushing.
11. Install a grounding bushing on the upper end of all RMC terminating in a ground box. Ground RMC elbows when any part of the elbow is less than 18 in. below the bottom of the ground box. Install a PVC bushing or bell end fitting on the upper end of all PVC conduits terminating in a ground box.

VII. GROUNDING SYSTEM

1.0 GENERAL GROUNDING INFORMATION

A. Description- Provide ground system consisting of copper wires, ground rods, and concrete-encased grounding electrodes (UFERS), of the configuration to minimized potential gradient irregularities, drain leakage, and fault currents to earth.

B. Performance - Provide a grounding system, consisting of a minimum of one ground rod, having a resistance not greater than 5 ohms to ground. additional ground rods may be added to the system to achieve less than 5 ohms resistance.

C. Design criteria

1. Ground resistance

A. The combined ground resistance of separate systems bonded together below grade may be used to meet the specified ground resistance, but the minimum number of rods indicated in the plans must still be provided.

B. Measure the resistance's of systems requiring separate ground resistance's separately before bonding below grade.

2. Only provide UL approved materials listed for grounding systems.

3. Do not combine materials that can form an electrolytic couple that will accelerate corrosion in the presence of moisture unless moisture is permanently excluded from the junction of such materials.

4. Product data - Submit product data for grounding materials and products used to perform the work of this section.

D. Materials

1. Conductors

A. Bare ground wire - For number 8 or larger bare ground wire sizes, provide soft drawn copper, class A or class B, stranded wire meeting the requirements of ASTM B 8.

E. Ground compression connectors

1. Provide molds, thermite packages, and other material for ground compression connectors that are full-rated to carry 100 percent of the cable rating and which meet IEEE 837.

2. Provide the compression materials from a single manufacturer throughout the project.

3. Provide the items necessary for connecting cable to ground rods.

4. Ground rods

Provide copper-clad steel ground rods conforming to the requirements specified in UL 467.

Diameter: 5/8 INCH Minimum Length: 10 FEET Minimum Depth Inbedded in Earth: 8 FEET

2.0 GROUNDING INSTALLATION

A. Install grounding components and systems in accordance with the requirements specified in UL 467, IEEE 81, AND IEEE 142.

B. System grounding

1. Ground rods

A.. Drive ground rods into the ground until the tops of the rods are approximately 18 inches below finished grade.

B. If multiple ground rods are needed to meet the minimum resistance of 5 ohms, space ground rods as evenly as possible, at least 6 feet apart, and connect conductors below grade.

2. Conductors

A. Provide minimum #8 ground wire.

B. Using suitable fasteners, securely attach exposed ground wires to structural supports at not more than 2-foot intervals, where applicable.

C. Bends in ground wires greater than 45 degrees are unacceptable.

3. Cable connections

A. Use approved exothermic-welded connections for conductor splices and connections between conductors and other components.

3.0 TESTING

A. Resistance test

1. Test procedure

A. The ground-resistance measurements of each ground rod will be taken from ground bus after cabinet installation.

1) The resistance to ground will be measured in accordance with the fall-of-potential method specified in IEEE 81 and IEEE 142.

2) Ground-resistance measurements will be made in normally dry weather, not less than 48 hours after rainfall, and with the ground under test isolated from other grounds.

B. Test reports will be prepared that indicate the location of the ground rod, the grounding system, and the resistance and soil conditions at the time the test was performed.

2. Acceptance criteria

A. The grounding system must have a resistance not greater than 5 ohms.

B. Do not energize any part of the electrical distribution system prior to the resistance testing of that system's ground rods and grounding system, and submission of the test results to the engineer and their approval.

4.0 INSPECTIONS - Prepare and submit as-built record drawings of the grounding system as installed and test reports to the Engineer for approval.

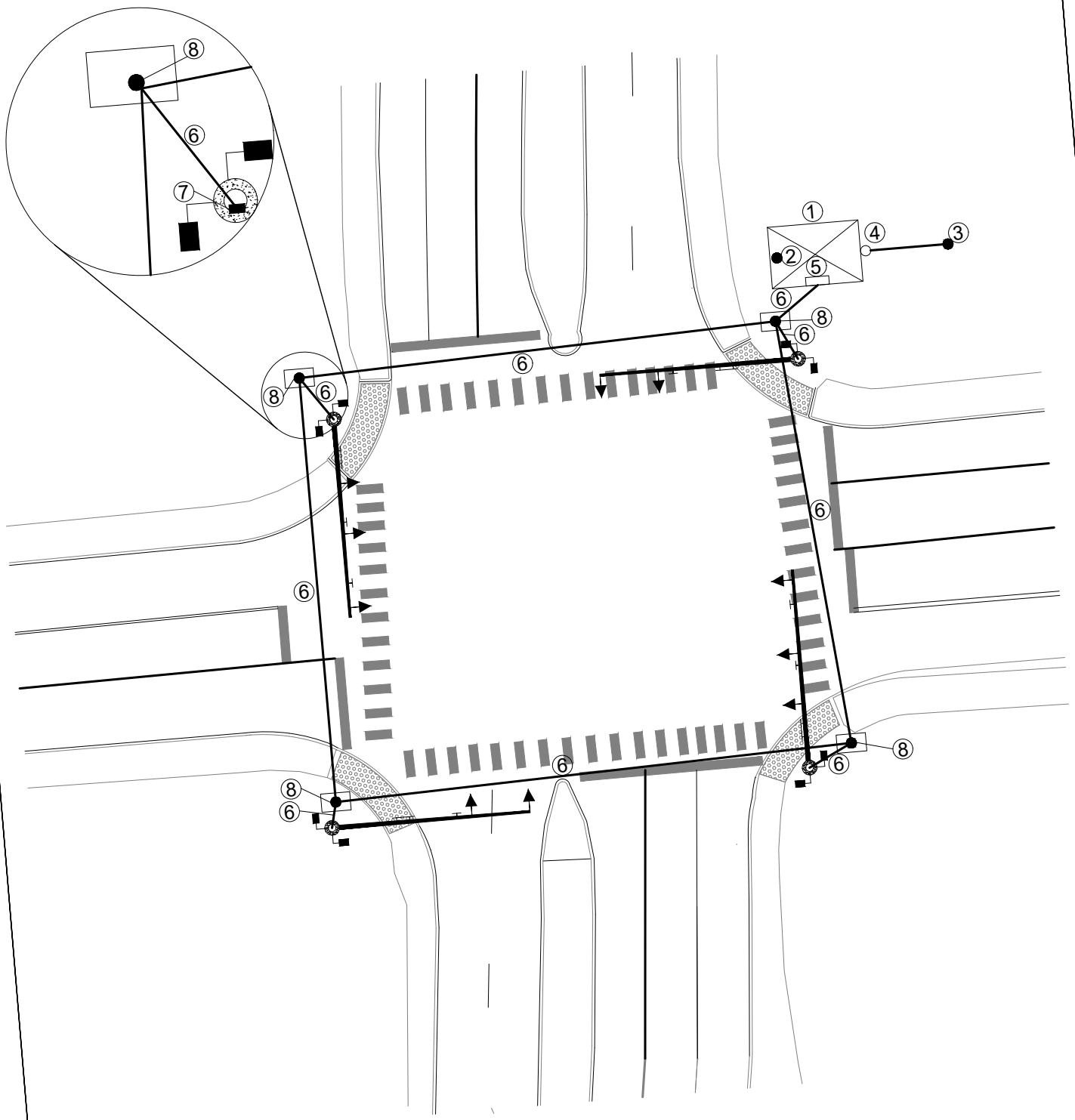


TYPICAL INTERSECTION SYSTEM GROUND DETAIL

| | | |
|---|---|---|
| CITY OF AUSTIN<br>DEPARTMENT OF PUBLIC WORKS | TRAFFIC SIGNAL ELECTRICAL NOTES AND DETAILS | STANDARD NO.<br>838-1<br>7 OF 8 |
| ADOPTED | THE ARCHITECT/ENGINEER ASSUMES RESPONSIBILITY FOR APPROPRIATE USE OF THIS STANDARD. | |

LEGEND

TYPICAL MAST ARM COMBINATION SIGNAL \ WITH PEDESTRIAN SIGNAL, PUSH BUTTON, AND SIGNAGE

PULL BOX

CONDUIT

KEY:

1. SIGNAL CABINET FOUNDATION
2. EXISTING PRIMARY GROUND ROD
3. PROPOSED SECONDARY 5/8 " X 10' GROUND ROD (IF REQUIRED) (LOCATE IN EXISTING PULL/GROUND BOX ONLY)
4. 1" RM LB CONDUIT FITTING TRANSITION TO 1" PVC
5. GROUND BUS BAR
6. SIGNAL CONDUIT (VARIES BY LOCATION)
7. GROUND LUG AT POLE BASE
8. 5/8" X 10' POLE GROUND ROD
9. GROUNDING ELEC CNDR (NO. 6)
10. GROUNDING ELEC CNDR (NO. 8)

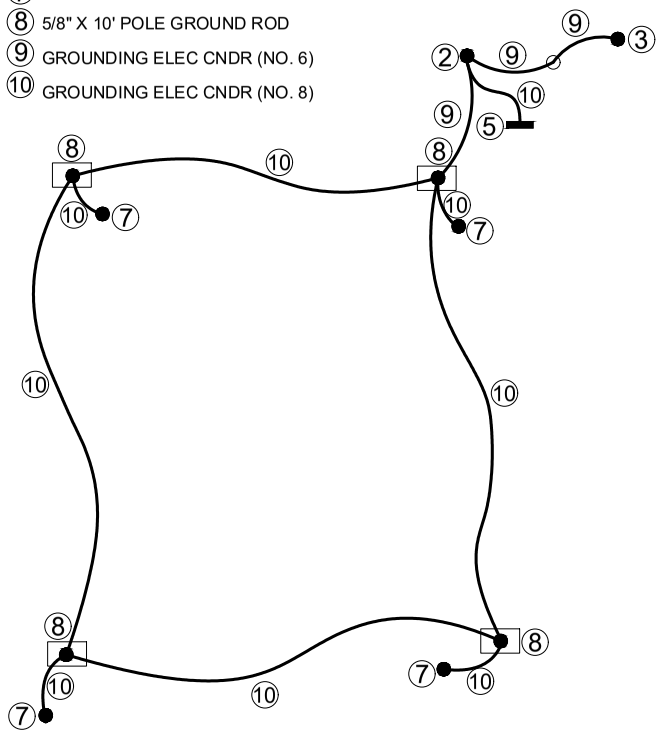


GROUNDING DETAIL

NOTES:

1. CONDUIT ROUTING SHOWN IS DIAGRAMMATIC ONLY, DEPICTING A STANDARD 4-LEG INTERSECTION WITH CONDUIT ON ALL FOUR SIDES.

2. NOT ALL INTERSECTIONS MAY HAVE THIS CONFIGURATION. SOME CONDUITS MAY NOT EXIST. SEE PLANS AND VERIFY IN THE FIELD FOR EXISTING CONDUIT ROUTING.

3. ALL UNDERGROUND CONDUIT TO HAVE A #8 STRANDED COPPER WIRE, BONDED TO THE GROUND ROD AT THE CABINET.

TYPICAL INTERSECTION SYSTEM GROUND DETAIL

| CITY OF AUSTIN<br>DEPARTMENT OF PUBLIC WORKS | TRAFFIC SIGNAL ELECTRICAL NOTES AND DETAILS | |
|---|---|---|
| ADOPTED | THE ARCHITECT/ENGINEER ASSUMES RESPONSIBILITY FOR APPROPRIATE USE OF THIS STANDARD. | STANDARD NO.<br>838-1<br>8 OF 8 |

# TRAFFIC SIGNAL OVERHEAD ELECTRICAL SERVICE

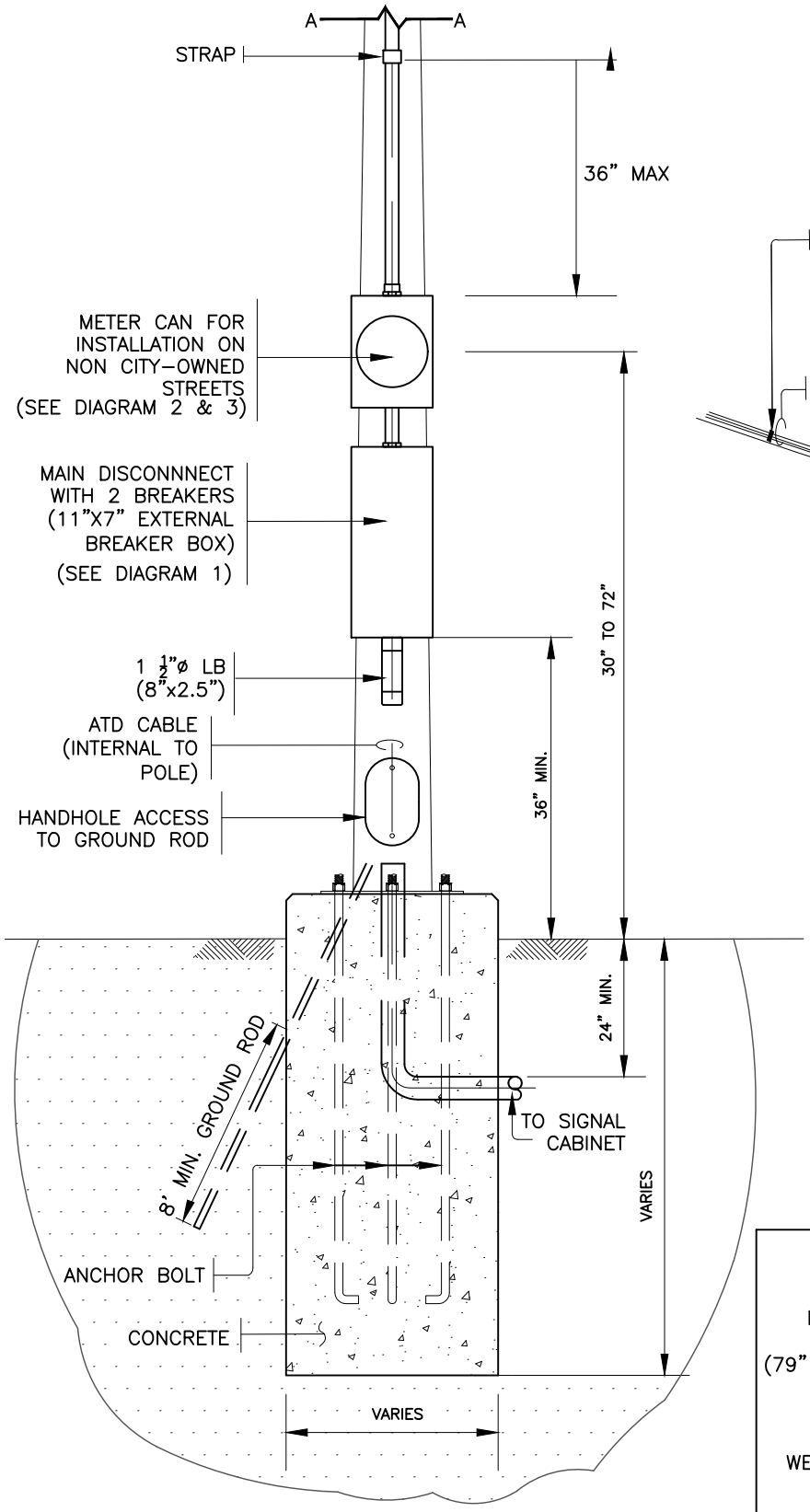


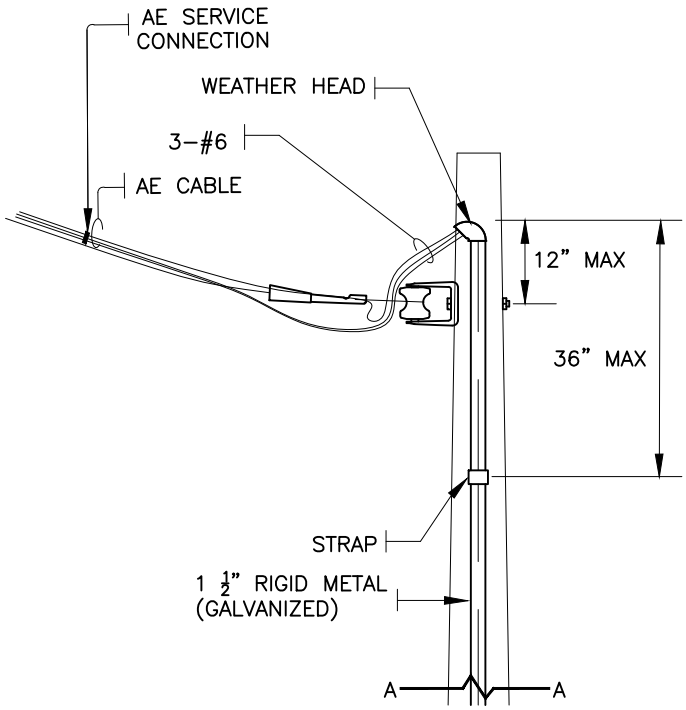


CITY OF AUSTIN OWNED STREETS (NO METER CAN)

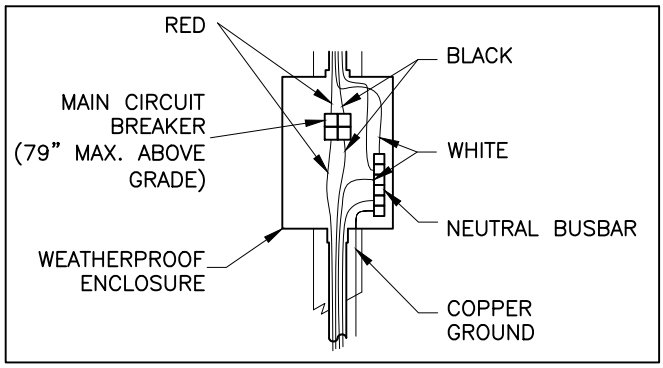


1 CIRCUIT BREAKER (NO METER) DIAGRAM

| CITY OF AUSTIN<br>DEPARTMENT OF PUBLIC WORKS | TRAFFIC SIGNAL ELECTRICAL SERVICE | |
|---|---|---|
| | THE ARCHITECT/ENGINEER ASSUMES RESPONSIBILITY FOR APPROPRIATE USE OF THIS STANDARD. | STANDARD NO.<br>838-2<br>1 OF 3 |

# TRAFFIC SIGNAL UNDERGROUND ELECTRICAL SERVICE

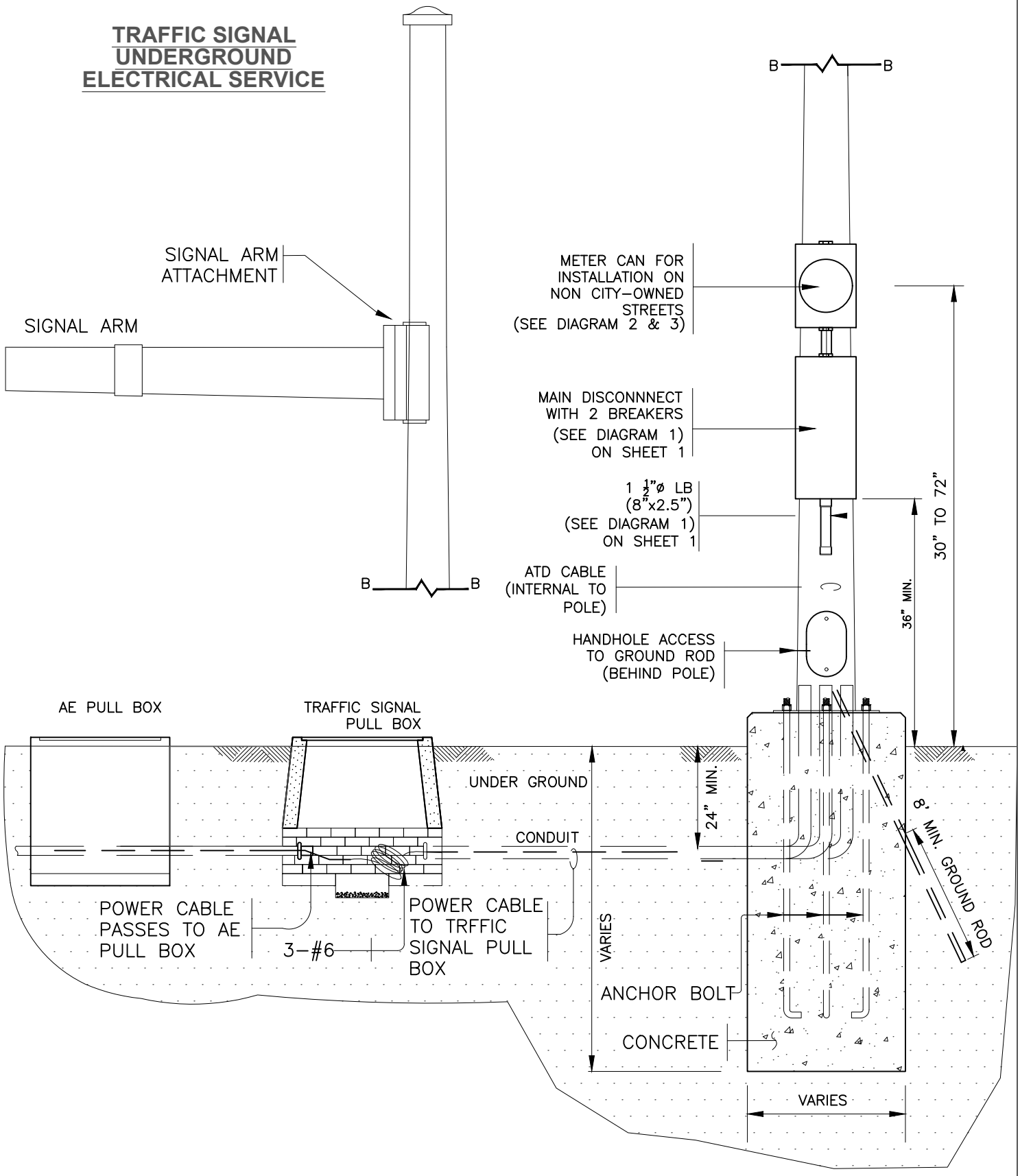


| CITY OF AUSTIN<br>DEPARTMENT OF PUBLIC WORKS | TRAFFIC SIGNAL ELECTRICAL SERVICE | |
|---|---|---|
| | THE ARCHITECT/ENGINEER ASSUMES RESPONSIBILITY FOR APPROPRIATE USE OF THIS STANDARD. | STANDARD NO.<br>838-2<br>2 OF 3 |

2 CIRCUIT BREAKER FOR NON CITY–OWNED STREETS (WITH METER CAN)

DIAGRAM

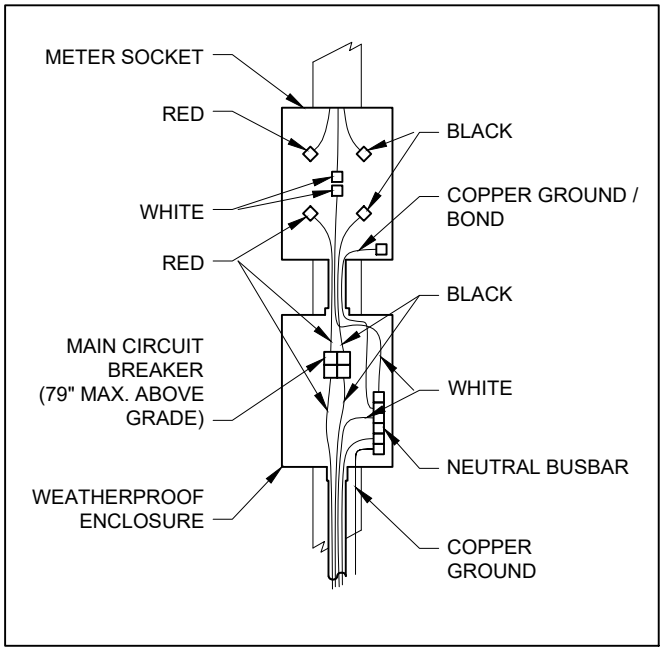


3 CONDUIT & CABLE

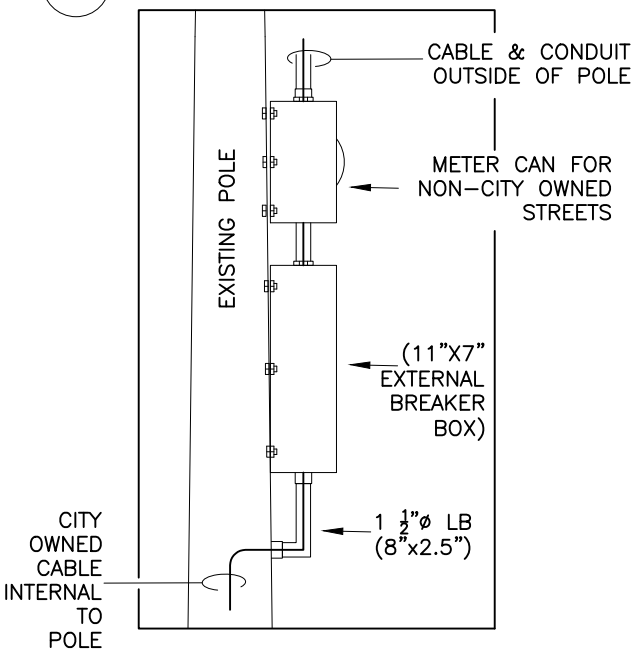


## ELECTRICAL SERVICE NOTES

1. SERVICE DROP CONDUCTORS FURNISHED & INSTALLED BY AUSTIN ENERGY (400 LB MAX TENSION)
2. ONE–POINT RACK: 16' MIN. TO 18' MAX. ABOVE GRADE/GROUND. ADDITIONAL HEIGHT MAY BE REQUIRED FOR AREAS SUBJECT TO VEHICULAR TRAFFIC.
3. MAIN CIRCUIT BREAKER IN WEATHERPROOF ENCLOSURE
4. COPPER GROUND WIRE SECURED (STAPLED) TO SIDE OF POLE (IF APPLICABLE)
5. SEE LATEST COA DETAIL 838–1 FOR GROUNDING DETAILS.
6. "AE" METER SOCKET TYPE 150–S: 150 AMP MAX. TYPE 200–S: 175–225 AMP

| CITY OF AUSTIN<br>DEPARTMENT OF PUBLIC WORKS | TRAFFIC SIGNAL ELECTRICAL SERVICE | |
|---|---|---|
| | THE ARCHITECT/ENGINEER ASSUMES RESPONSIBILITY FOR APPROPRIATE USE OF THIS STANDARD. | STANDARD NO.<br>838-2<br>3 OF 3 |

# CITY OF AUSTIN SIGNAL PHASING

## NORTH / SOUTH MAJOR STREET

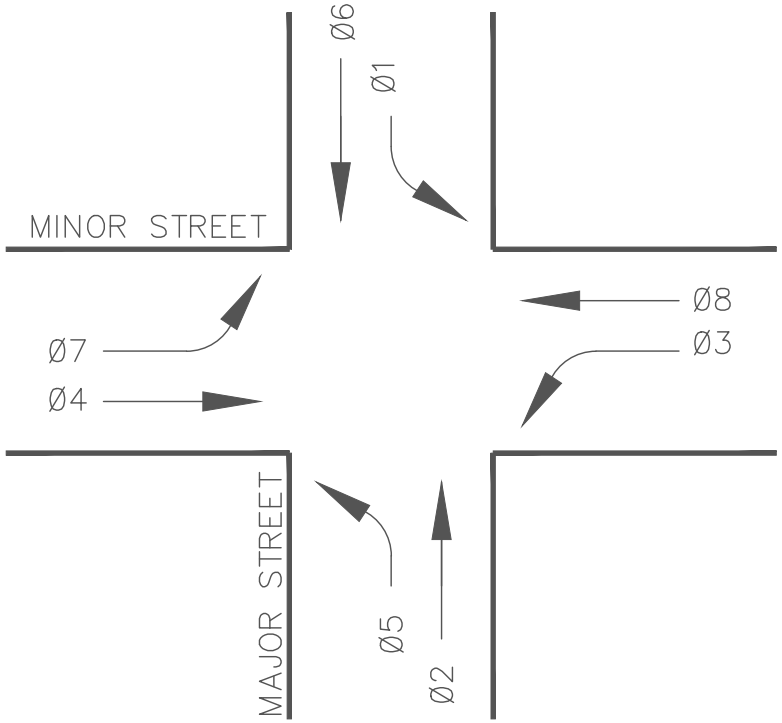


## EAST / WEST MAJOR STREET

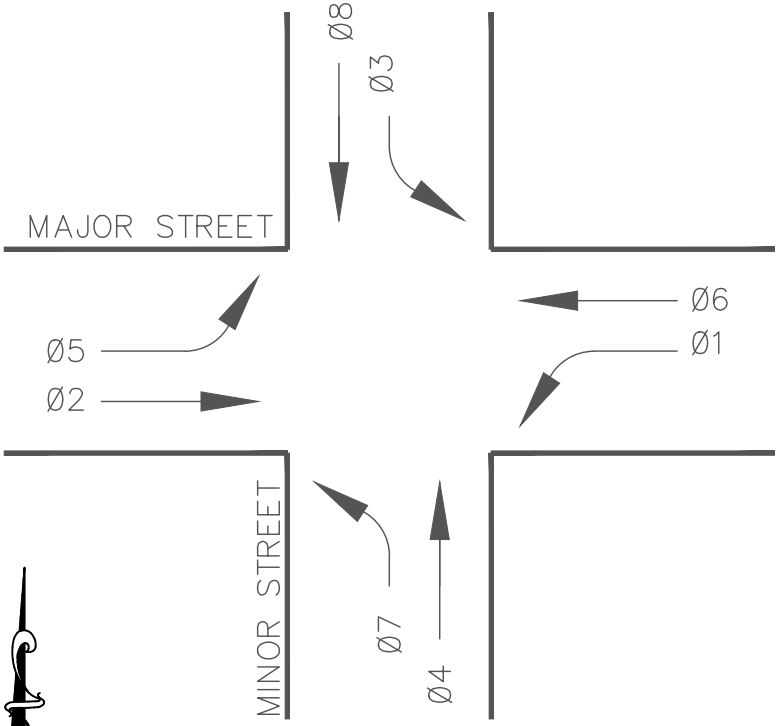


NOTES:
SIGNAL TIMING AND PHASING MAY BE ADJUSTED AS NEEDED AS TRAFFIC PATTERNS CHANGE

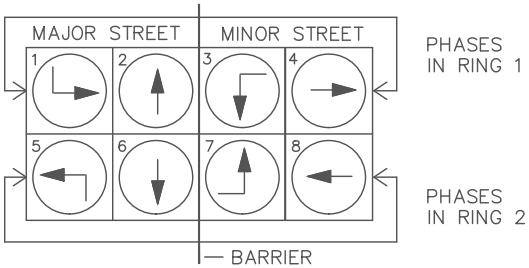


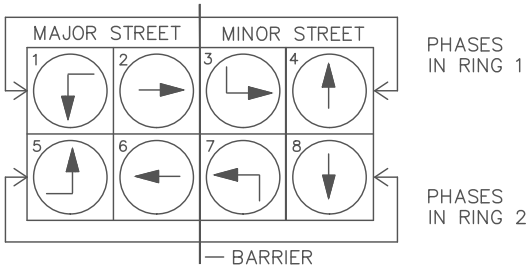


CITY OF AUSTIN
DEPARTMENT OF PUBLIC WORKS

TRAFFIC SIGNAL PHASING

THE ARCHITECT/ENGINEER ASSUMES RESPONSIBILITY FOR APPROPRIATE USE OF THIS STANDARD.

STANDARD NO.
838-3
1 OF 3

ADOPTED

# CITY OF AUSTIN SIGNAL PHASING
## FIGURE 6 & 7 DIAMOND

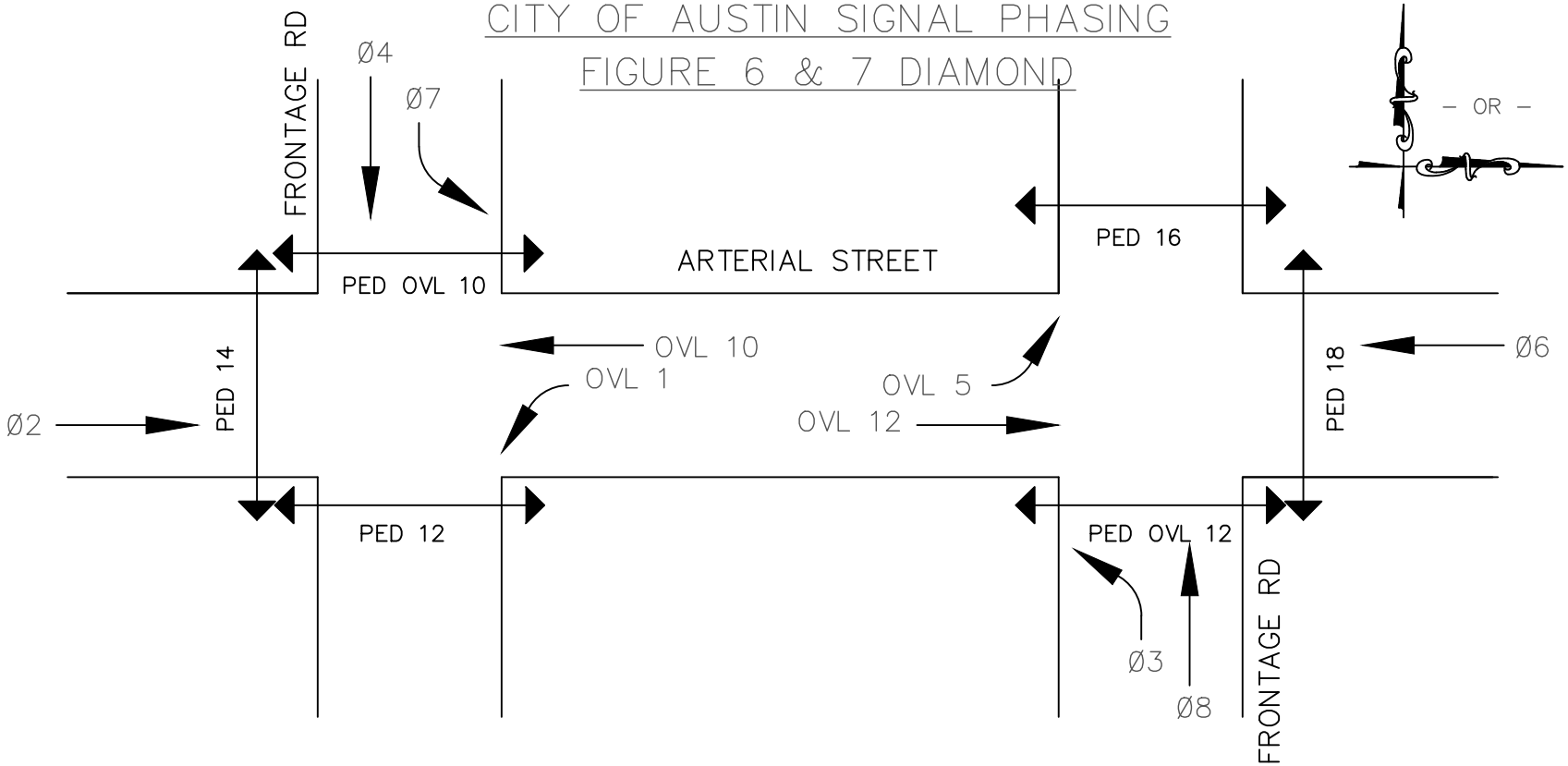


NOTES:
1. OVL 10 = 1 + 2 + 3
2. OVL 12 = 5 + 6 + 7
3. OVL 1 = 1 + 3
4. OVL 5 = 5 + 7

SIGNAL TIMING AND PHASING MAY BE ADJUSTED AS NEEDED AS TRAFFIC PATTERNS CHANGE

FIGURE 6

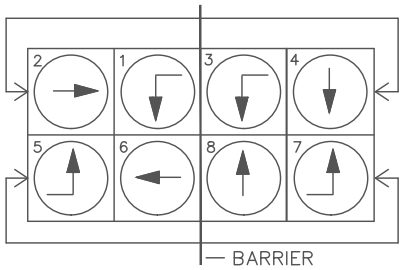


FIGURE 7

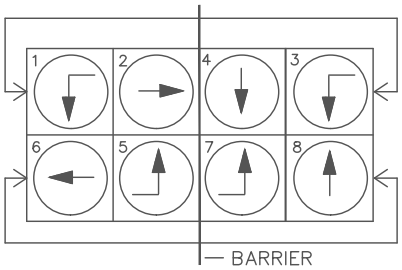


CITY OF AUSTIN
DEPARTMENT OF PUBLIC WORKS

TRAFFIC SIGNAL PHASING

THE ARCHITECT/ENGINEER ASSUMES RESPONSIBILITY FOR APPROPRIATE USE OF THIS STANDARD.

ADOPTED

STANDARD NO.
838-3
2 OF 3

# CITY OF AUSTIN SIGNAL PHASING
## TTI 4-PHASE DIAMOND

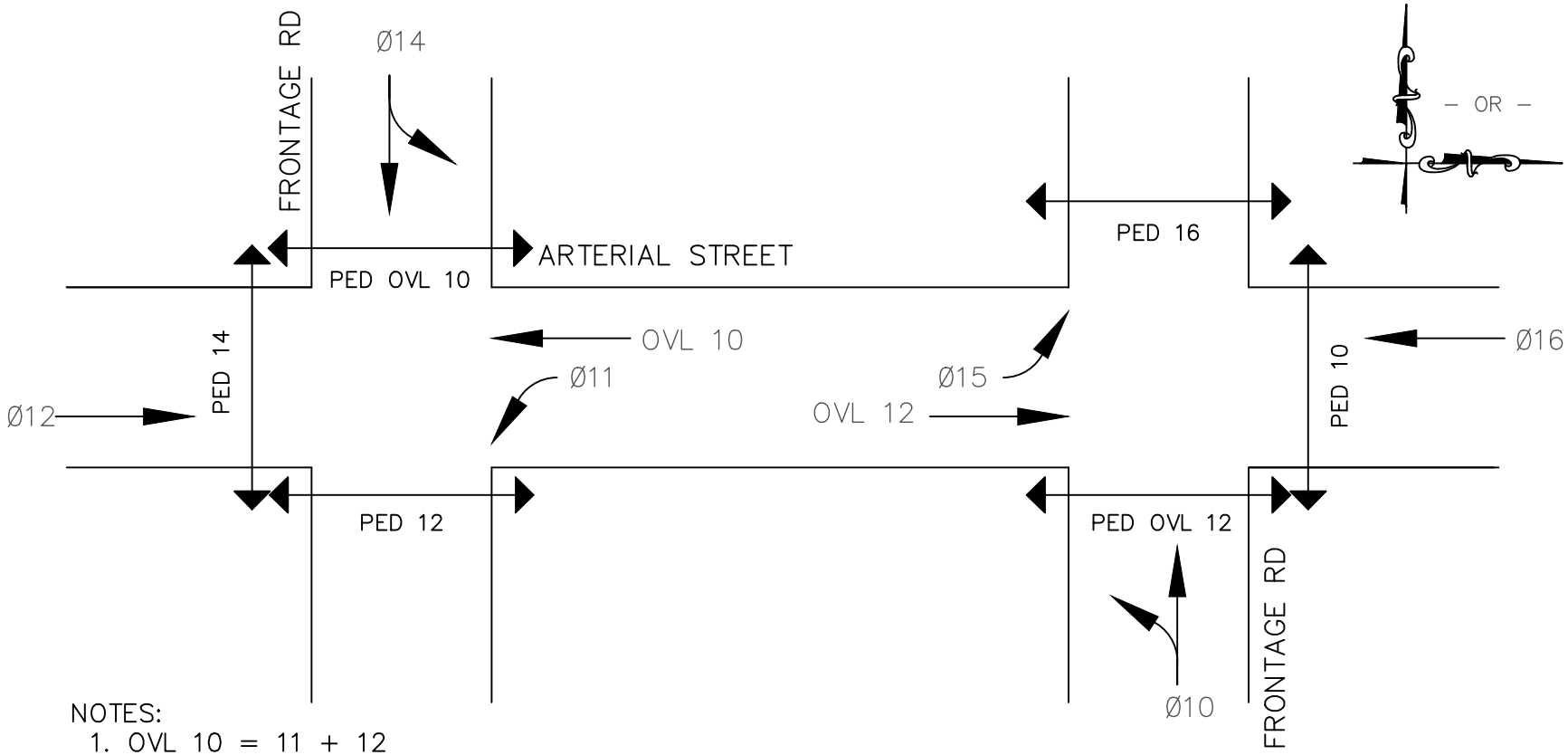


NOTES:
1. OVL 10 = 11 + 12
2. OVL 12 = 15 + 16
3. PH 14 TRAIL = WB ADVANCE
4. PH 10 TRAIL = EB ADVANCE

SIGNAL TIMING AND PHASING MAY BE ADJUSTED AS NEEDED AS TRAFFIC PATTERNS CHANGE

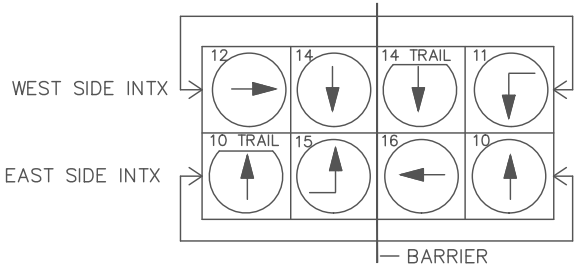


CITY OF AUSTIN
DEPARTMENT OF PUBLIC WORKS

TRAFFIC SIGNAL PHASING

THE ARCHITECT/ENGINEER ASSUMES RESPONSIBILITY FOR APPROPRIATE USE OF THIS STANDARD.

STANDARD NO.
838-3
3 OF 3

ADOPTED

NOTE:
LENGTH OF MAST ARM, NUMBER AND TYPE OF SIGNAL HEADS, AND SIGNAL HEAD PLACEMENT OVER LANES AS SPECIFIED ON INDIVIDUAL PLANS.

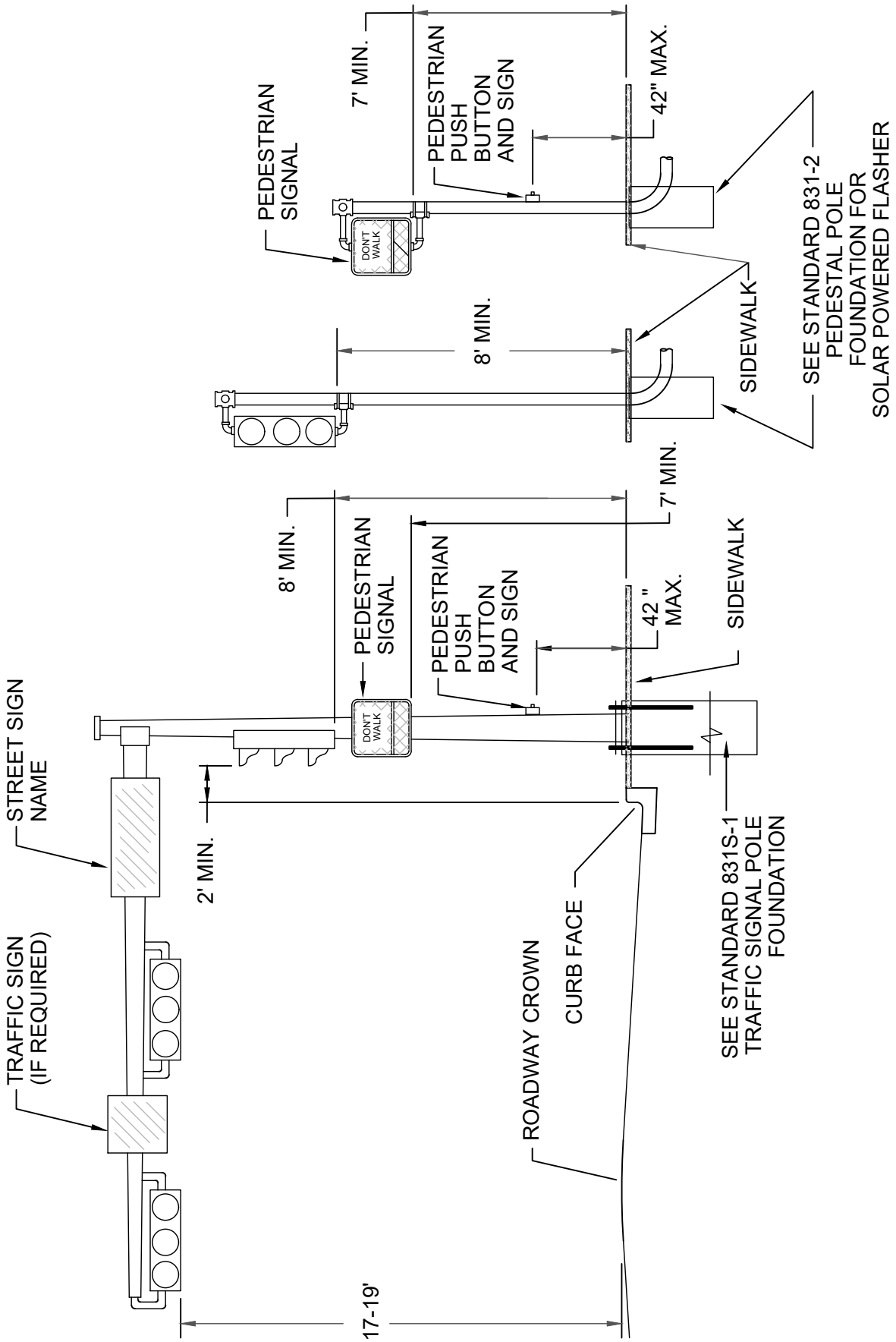


| CITY OF AUSTIN<br>DEPARTMENT OF PUBLIC WORKS | PEDESTRIAN AND<br>VEHICULAR SIGNAL WIRING | |
|---|---|---|
| ADOPTED | THE ARCHITECT/ENGINEER ASSUMES RESPONSIBILITY FOR APPROPRIATE USE OF THIS STANDARD. | STANDARD NO.<br>839-1<br>1 OF 3 |

NOTE:
LENGTH OF MAST ARM, NUMBER AND TYPE OF SIGNAL HEADS, AND SIGNAL HEAD PLACEMENT OVER LANES AS SPECIFIED ON INDIVIDUAL PLANS.

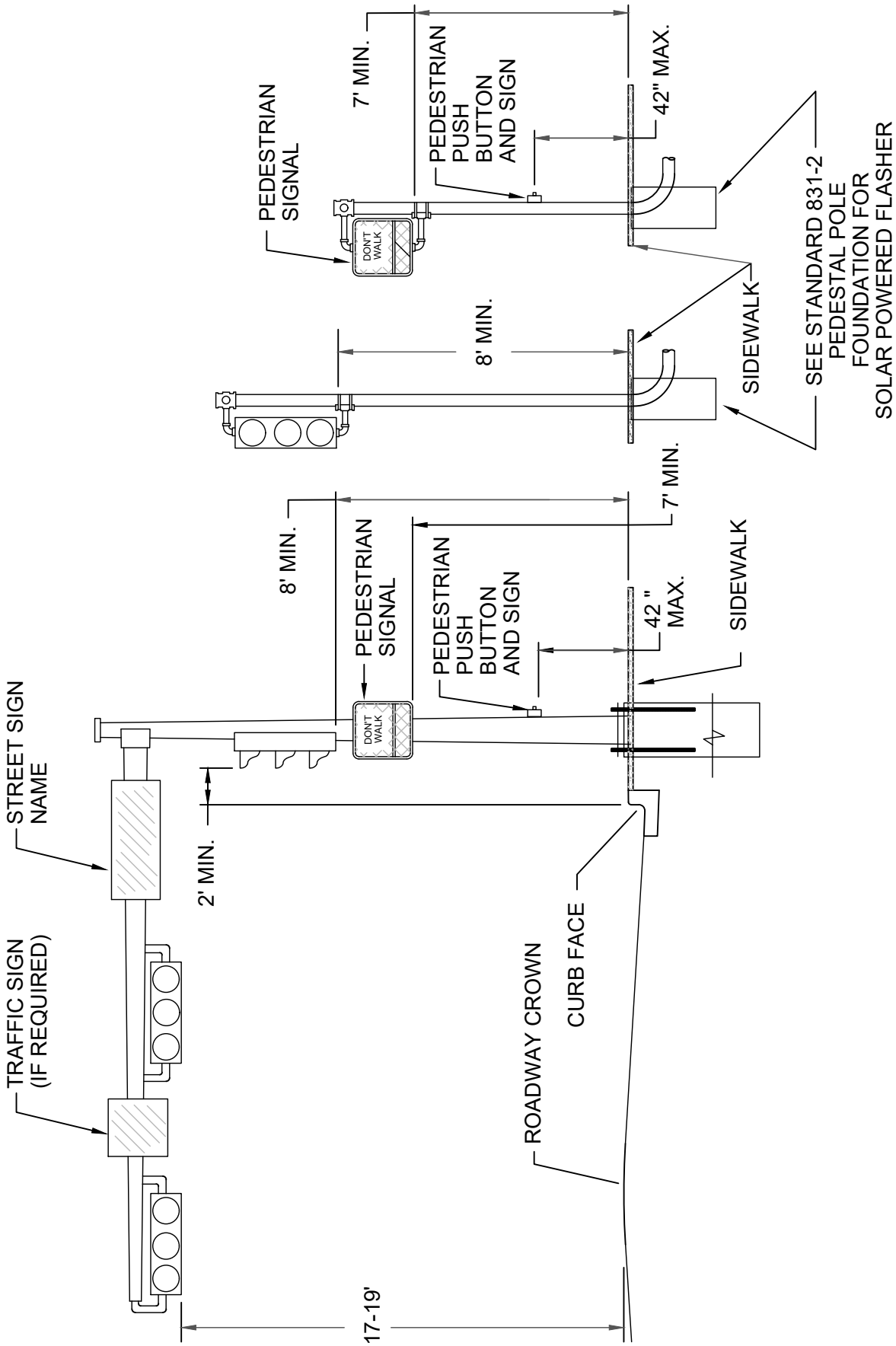


| CITY OF AUSTIN<br>DEPARTMENT OF PUBLIC WORKS | PEDESTRIAN AND<br>VEHICULAR SIGNAL WIRING | |
|---|---|---|
| ADOPTED | THE ARCHITECT/ENGINEER ASSUMES RESPONSIBILITY FOR APPROPRIATE USE OF THIS STANDARD. | STANDARD NO.<br>839-1<br>1 OF 3 |

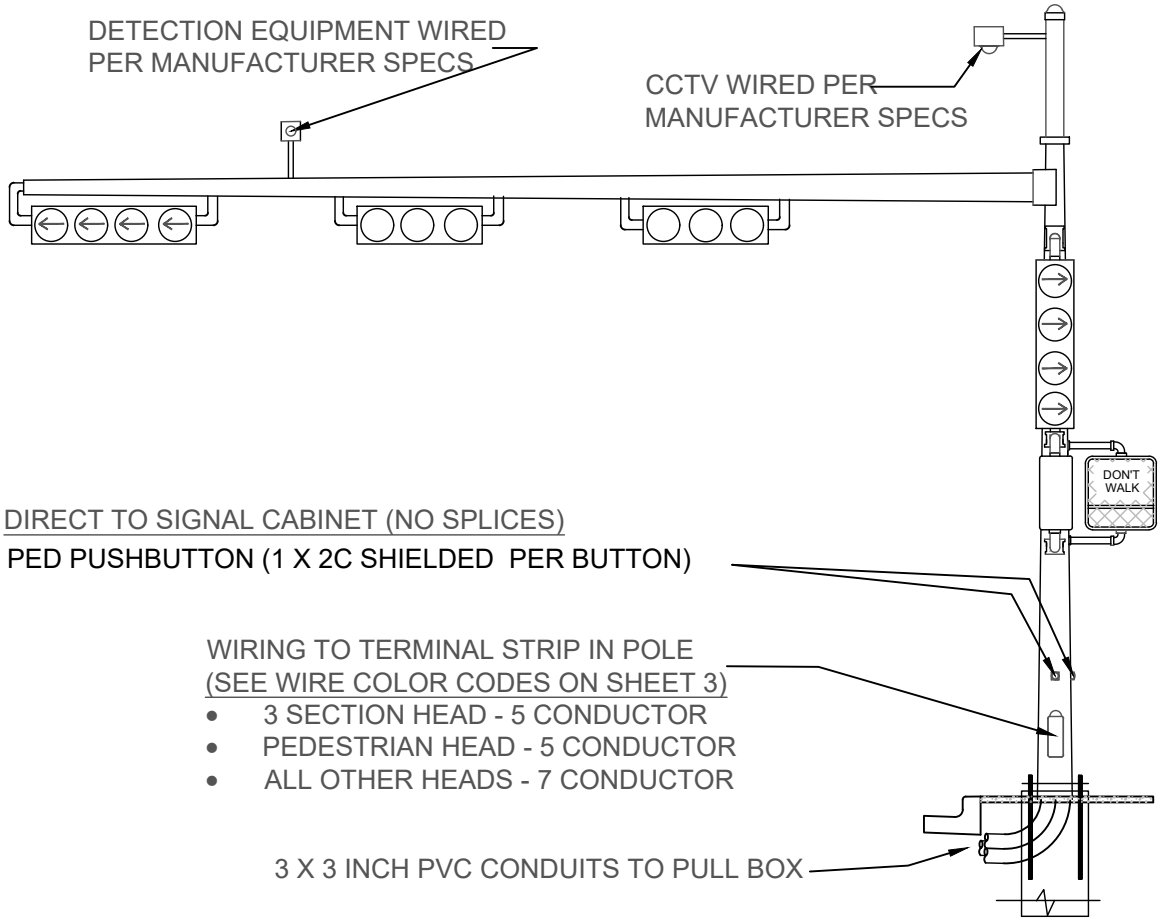


NOTES:

1. 1 X 20 CONDUCTOR PER SIGNAL STANDARD - RUN FROM SIGNAL CABINET TO TERMINAL STRIP (SEE WIRING COLOR CODES ON DETAIL
2. 1 X 2CS (12 AWG IMSA-50-2) PER PED PUSH BUTTON TO SIGNAL CABINET (NO SPLICES)
3. PLACE HIGH VOLTAGE CABLES IN SEPARATE CONDUITS FROM LOW VOLTAGE WHEN POSSIBLE
4. WIRING TO SUPPLEMENTAL DEVICES PER MANUFACTURE RQMTS - IF UNKNOWN, RUN DIRECTLY TO SIGNAL CABINET (NO SPLICES)
5. DETAILED ELEVATION SHEETS MUST BE PROVIDED FOR EACH POLE IN THE DESIGN
6. VERIFY DETECTION EQUIPMENT LOCATION(S) WITH THE CITY PRIOR TO INSTALLATION
7. SEE TABLE ON SHEET 3 FOR WIRE TERMINAL ASSIGNMENTS IN THE CABINET AND IN THE POLE BASE

| CITY OF AUSTIN<br>DEPARTMENT OF PUBLIC WORKS | PEDESTRIAN AND<br>VEHICULAR SIGNAL WIRING | |
|---|---|---|
| ADOPTED | THE ARCHITECT/ENGINEER ASSUMES RESPONSIBILITY FOR APPROPRIATE USE OF THIS STANDARD. | STANDARD NO.<br>839-1<br>2 OF 3 |

| move | Conductor Color | Signal Direction | Signal Colors | Left Turn Heads | | | | Thrus, Rights, Peds | | | | |
|---|---|---|---|---|---|---|---|---|---|---|---|---|
| | | | | Prot Only 3-Sec | FYA 4 Sec | Split 4 Sec | 5-Sec | Thrus | Right Turn FYA | Prot Only Right 3 Sec | Ped N/S | Ped E/W |
| | | | | 7C | 7C | 7C | 7C | 5C | 7C | 7C | 5C | 5C |
| 1 | Red/White | Thrus | R | | | Red | | Red | | | | |
| 2 | Blue/White | | Y | | | Orange | | Black | | | | |
| 3 | Green/White | | <-- G | | | Blue | | | | | | |
| | | | G | | | Green | | Green | | | | |
| 4 | White Neutral | | | | | White | | White | | | | |
| 5 | Red | Left Turns / FYA / 5 Section | <--R / R | Red | Red | | Red | | | | | |
| 6 | Orange | | <--Y / Y | Orange | Orange | | Orange | | | | | |
| 7 | Black | | <--FYA | | Black | | Black | | | | | |
| 8 | Blue | | Spare | | | | Blue | | | | | |
| 9 | Green | | <--G / G | Green | Green | | Green | | | | | |
| 10 | Neutral Jumper | | | White | White | | White | | | | | |
| 11 | Red/Black | N/S Peds | Don't Walk | | | | | | | | Red | |
| 12 | Green/Black | | Walk | | | | | | | | Green | |
| 13 | Black/White | E/W Peds | Don't Walk | | | | | | | | | Red |
| 14 | Blue/Black | | Walk | | | | | | | | | Green |
| 15 | Neutral Jumper | | | | | | | | | | White | White |
| 16 | Red/Green | Nearside | R | | | | | Red | | | | |
| 17 | Orange/Red | | Y | | | | | Black | | | | |
| 18 | Blue/Red | | G | | | | | Green | | | | |
| 19 | Neutral Jumper | | | | | | | White | | | | |
| 20 | White/Red | Right Turn FYA | R --> | | | | | | Red | Red | | |
| 21 | Orange/Black | | Y --> | | | | | | Orange | Orange | | |
| 22 | White/Black | | FYA --> | | | | | | Black | | | |
| 23 | Black/Red | | G --> | | | | | | Green | Green | | |
| 24 | Neutral Jumper | | | | | | | | White | White | | |

Notes:
1. Contractor Shall Land All Conductors From The 20C Cable To The Left Side Of The Terminal Strip
2. Spare Conductors To Be Left As Long As The Longest Conductor Used For That Wire
3. Before Installing The Final Wiring, Meet With The City Signal Superintendant Or Their Designee To Discuss Any Field Changes
4. All Wiring To Be Attached At The Terminal Strip. No Jumpers Allowed In The Signal Head.
5. Deviations From This Wiring Table Will Not Be Accepted Unless A Written Waiver Is Obtained From the City Signal Superintendant