PROJECT INFORMATION

LEGAL DESCRIPTION:	**Lot 6 and Lot 7, Block 114, original City of Austin, Travis County, Texas**		
HISTORIC DESIGNATIONS:	**Austin Landmark, National Register of Historic Places, Recorded Texas Historic Landmark**		
ZONING:	**CS-1-H**		
YEAR CONSTRUCTED:	**1858 and 1872**	**APPLICABLE CODES:**	**2021 IBC and IEBC**
LOT SIZE:	**17,592 SQ. FT.**	**OCCUPANCY:**	**A-3 or B**
FLOOR AREA:	**2,625 SQ. FT. [NET]**	**CONSTRUCTION TYPE:**	**IIIB**

SYMBOL LEGEND

- FFE 0" — FFE OR GRADE ELEVATION AS NOTED
- D101 — DOOR NUMBER
- W1 — WINDOW NUMBER
- A — WALL TYPE (PLAN VIEW)
- NEW WALL (PLAN VIEW)
- ℄ — CENTERLINE
- EQUAL DIMENSIONS IN LINE
- 1 / A-211 — ELEVATION (LARGE SCALE)
- N W E S — 1/A-401 — ELEVATION (SMALL SCALE)
- 1 / A-211 — SECTION DETAIL
- 1 / A-211 — PLAN/ ELEVATION DETAIL

ABBREVIATIONS

&	And
#	Pound
@	At
A/C	Air Conditioning
ACOUST	Acoustical
ADD'L	Additional
ADJ	Adjacent
AFF	Above Finish Floor
AHJ	Authority Having Jurisdiction
AHU	Air Handling Unit
APPROX	Approximately
ARCH	Architect
ASTM	American Society for Testing & Materials
BFE	Base Flood Elevation
BRD	Board
BLDG	Building
BDRM	Bedroom
BTM	Bottom
BTWN	Between
CAB	Cabinet
CF	Cubic Feet
CJ	Control Joint
CL	Centerline
CLG	Ceiling
CLO	Closet
CLR	Clear
COL	Column
COMP	Composite
CONC	Concrete
CONST	Construction
CONT	Continuous
COORD	Coordinate, Coordination
CRZ	Critical Root Zone
CVR	Cover
CW	Cold Water
D	Deep, Depth, Dryer
DBL	Double
DEMO	Demolish, Demolition
DH	Double Hung
DIA	Diameter
DIAG	Diagonal, Diagonally
DN	Down
DS	Downspout
DW	Dishwasher
DWG	Drawing
DWR	Drawer
E	East
EA	Each
EJ	Expansion Joint
EM	Electric Meter
EQ	Equal Spacing, Equivalent
EQUIP	Equipment
EXST'G	Existing
EXT	Exterior
EQ	Equal Spacing, Equivalent
EQUIP	Equipment
EXH	Exhaust
EXST'G	Existing
EXT	Exterior
FAR	Floor-Area Ratio
FF(E)	Finished Floor (Elevation)
FIN	Finish(ed)
FIXT	Fixture
FLR	Floor
FT	Feet, Foot
FTG	Footing
FV	Field Verify
FV HT	Field Verify Height
GA	Gauge
GALV	Galvanized
GC	General Contractor
GFCI	Ground Fault Circuit Interrupt
GL	Glass
GM	Gas Meter
GPM	Gallons Per Minute
GR	Grade
GRND	Ground
GSF	Gross Square Feet
GYP BD	Gypsum Wall Board
HB	Hose Bib
HDR	Header
HDWR	Hardware
HORIZ	Horizontal
HR	Hour
HT	Height
HTG	Heating
HVAC	Heat/Ventilation/ Air Conditioning
I.E.	Id Est (That Is)
IN	Inches
INAC	Inaccessible
INCL	Including
INFO	Information
INSUL	Insulation
INT	Interior
JNT	Joint
JST	Joist
KIT	Kitchen
L	Length
LAM	Laminated
LAV	Lavatory
LB(S)	Pound(s)
LF	Linear Foot
LP	Light Pole or Lightning Protection
LT	Light
LVR	Louver
MFGR	Manufacturer
MAX	Maximum
MECH	Mechanical
M/E	Mechanical/Electrical
MEP	Mechanical, Electrical, & Plumbing
MIN	Minimum
MISC	Miscellaneous
MTD	Mounted
MTL	Metal
N	North
NA	Not Applicable
NIC	Not in Contract
NO	Number
NSF	Net Square Feet
NTE	Not to Exceed
NTS	Not to Scale
OC	On Center
OCEW	On Center Each Way
OP'G	Opening
OVHD	Overhead
OZ	Ounce
P&I	Provide & Install
PC	Photo Cell
PG	Page
PL	Plate or Plateline
PR	Pair
PSF	Pounds Per Square Foot
PSI	Pounds Per Square Inch
PT	Pressure Treated
PTD	Painted
PVC	Polyvinyl Chloride
PVMT	Pavement
PWD	Plywood
QTR	Quarter
R	Radius/Refrigerator
RCP	Reflected Ceiling Plan
RE/REF	Reference
REINF	Reinforced
REQ'D	Required
REQMT'S	Requirements
REV	Revision
RFG	Roofing
RM	Room
RO	Rough Opening
ROW	Right of Way
S	South
SALV	Salvage
SAU	Self-Adhering Underlayment
SCH'D	Scheduled
SECT	Section
SEP	Seperate, Seperated
SF	Square Feet
SHT	Sheet
SIM	Similar
SHTG	Sheathing
SK	Sink
SMACNA	Sheet Metal & Air Conditioning National Association, Inc.
SPECS	Specifications
SPEC'D	Specified
SQ	Square
SS	Stainless Steel
STL	Steel
STRUCT	Structural
SUSP	Suspended
SW	Switch
SYM	Symmetrical
T&G	Tongue & Groove
TEMP	Temporary, Tempered
THK	Thick
TOT	Total
TOW	Top of Wall
TRTD	Treated
TYP	Typical
UC	Under Counter
UCR	Under Counter Refrigerator
UL	Underwriter's Laboratory
UNFIN	Unfinished
UNO	Unless Noted Otherwise
VB	Vapor Barrier
VERT	Vertical
VFY	Verify
W	Wide, Width, West, Washing Machine
W/	With
W/O	Without
W/D	Stackable Washer Dryer
WD	Wood
WDW	Window
WH	Water Heater
WM	Water Meter
WP	Waterproofing
WT	Weight
YD	Yards

LIST OF DRAWINGS

ARCHITECTURAL

A-000	COVER SHEET
A-100	SITE PLAN
A-110	DEMOLITION PLANS
A-120	FOUNDATION & PAVING
A-121	FIRST FLOOR AND FRAMING PLANS
A-122	SECOND FLOOR AND ROOF PLANS
A-210	ELEVATIONS
A-310	SECTIONS
A-510	RAILING & POST DETAILS
A-511	DETAILS
A-600	SPECIFICATIONS

STRUCTURAL

S-001	STRUCTURAL NOTES
S-002	STRUCTURAL NOTES
S-003	SPECIAL INSPECTIONS
S-101	FOUNDATION, FLOOR & ROOF
S-201	STRUCTURAL DETAILS
S-202	STRUCTURAL DETAILS

GENERAL NOTES

1. All work shall be performed in a professional matter, and in accordance with the International Building Code, related trade codes, and applicable local codes, ordinances and laws.
2. Contractor shall verity critical dimensions before beginning work. Do not scale drawings. Ask Architect for needed dimensions if not provided.
3. Historic designation of this building requires the Contractor and his subcontractors to exercise special caution in executing the work to prevent unnecessary damage to historic features, conditions, or materials. Contractor shall inform all subcontractors and workmen of these requirements.
4. The Contractor shall thoroughly example and familiarize himself with the requirements of the Contract Documents. Any conflicts shall be brought to the Architect's attention for resolution prior to the work being installed.
5. Perform all work in a safe and conscientious manner to prevent injuries and damage to the building and workers. Contractor shall maintain OSHA Standards for job safety and worker protection, and comply with applicable state and local government requirements.
6. Building permitting will be coordinated by the Owner and Architect prior to construction. Contractor is responsible for all trade permits, inspections, and compliance requirements.
7. Maintain the building and site in a clean and orderly condition.
8. The Contractor shall visit the site of the proposed work and full acquaint himself with the existing conditions regarding site access, staging, parking limitations, security, and other aspects of constructibility.
9. The Contractor shall coordinate work between all trades in this contract to ensure a smooth and timely workflow.
10. All work to be warranted for one year from the date of Substantial Completion unless otherwise noted.

DESIGN TEAM

ARCHITECTURE
O'CONNELL ARCHITECTURE, LLC
TERESA O'CONNELL, AIA
3908 AVENUE B, SUITE 309
AUSTIN, TEXAS 78751
512|751-1374

STRUCTURAL ENGINEERING
TSEN ENGINEERING
JAMIE BUCHANAN, P.E.
210 BARTON SPRINGS ROAD, #250
AUSTIN, TEXAS. 78704

OWNER
GERMAN TEXAS HERITAGE SOCIETY
CHRISTOPHER MARKLEY, EXECUTIVE DIRECTOR
507 EAST 10th STREET
AUSTIN, TEXAS. 78701

GERMAN FREE SCHOOL

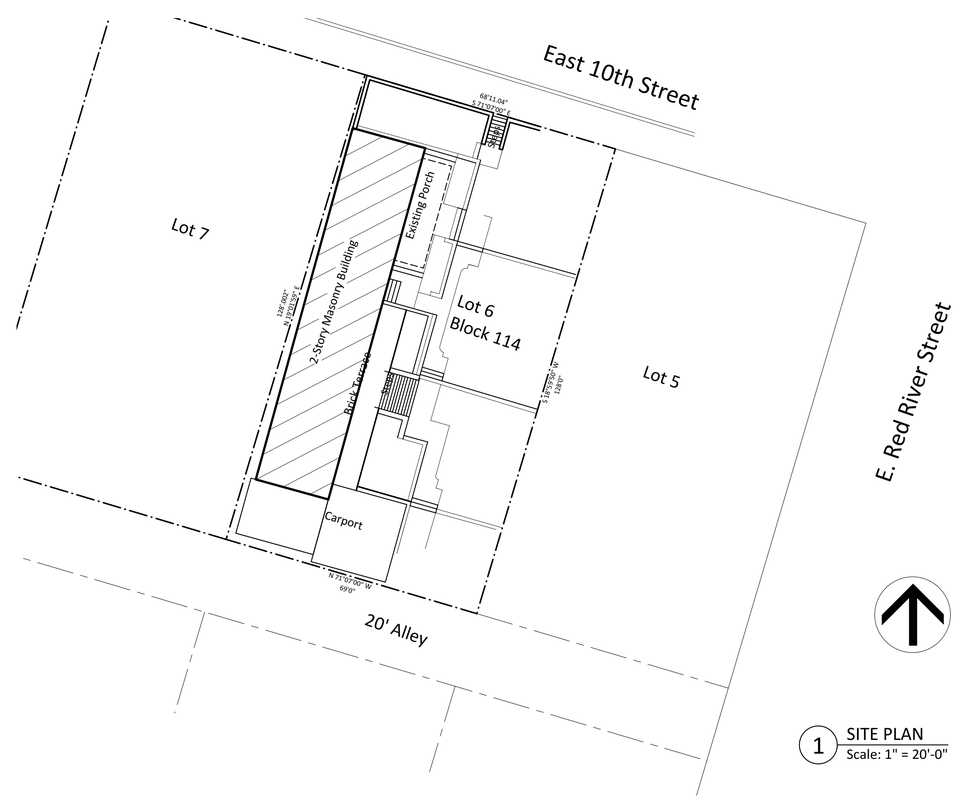

1 SITE PLAN
Scale: 1" = 20'-0"

O'Connell ARCHITECTURE
3908 Avenue B, #309
Austin, Texas 78751
512|751-1374

NOT FOR CONSTRUCTION
TERESA O'CONNELL
#15432

GERMAN FREE SCHOOL
507 E. 10th Street, Austin Texas 78701

ISSUE DATE
95% CONSTRUCTION DOCS
July 31, 2022

SHEET NAME
COVER SHEET

SHEET NUMBER
A-000

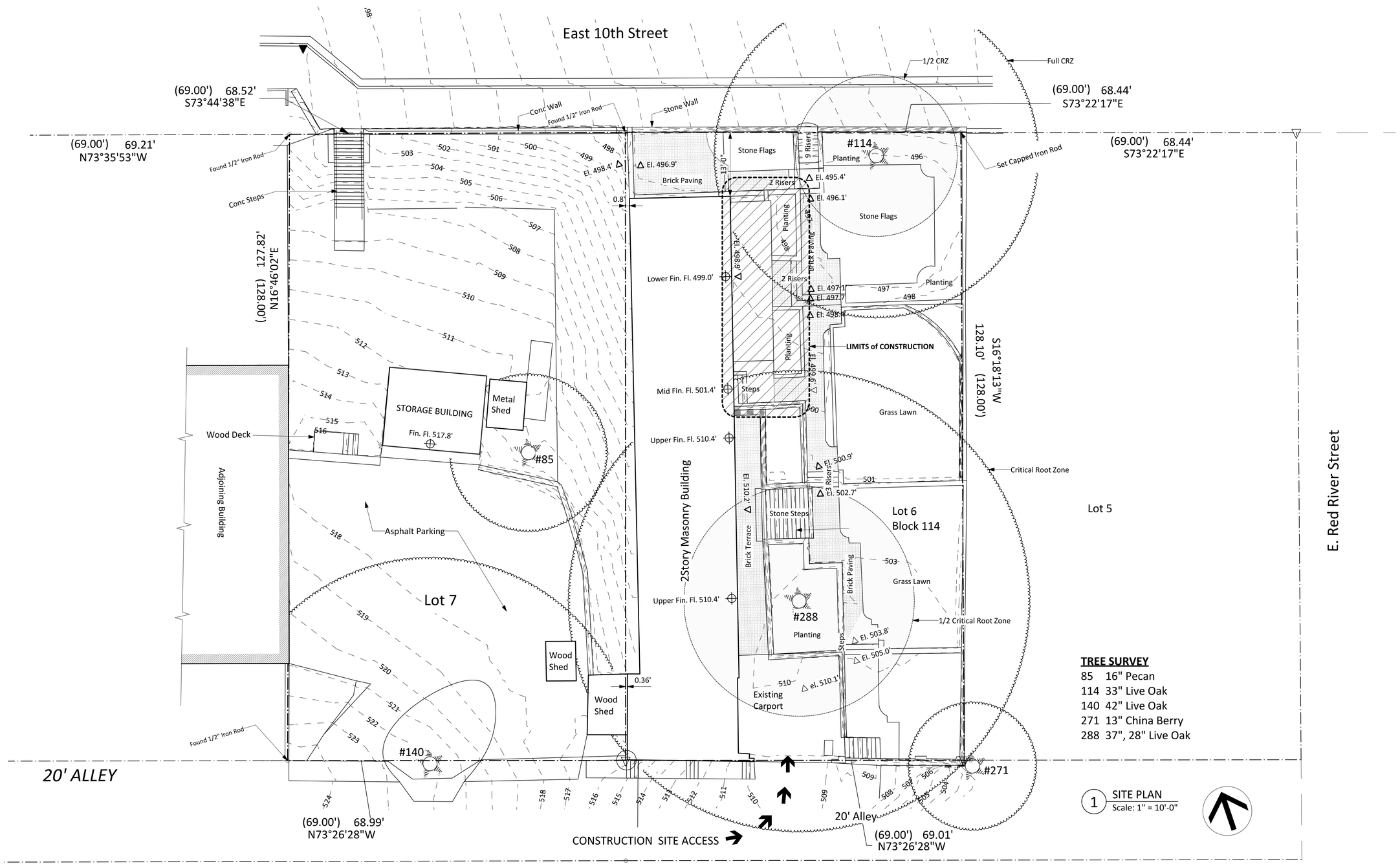

TREE SURVEY

85 16" Pecan
114 33" Live Oak
140 42" Live Oak
271 13" China Berry
288 37", 28" Live Oak

1 SITE PLAN
Scale: 1" = 10'-0"

O'Connell
ARCHITECTURE
3908 Avenue B, #309
Austin, Texas 78751
512|751-1374

NOT FOR CONSTRUCTION
TERESA O'CONNELL
#15432

GERMAN FREE SCHOOL
507 E. 10th Street, Austin Texas 78701

ISSUE DATE
70% CONSTRUCTION DOCS
1/28/22

SHEET NAME
SITE PLAN

SHEET NUMBER
A-100

3 WEST ELEVATION
Scale: 1/4" = 1'-0"

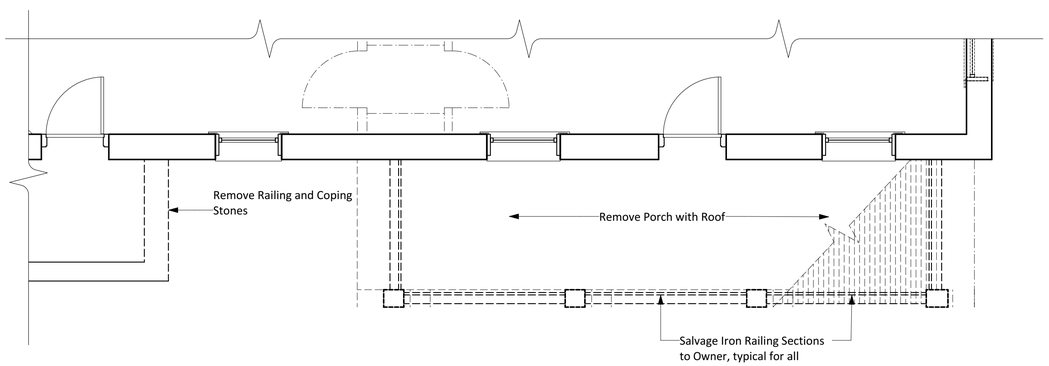

2 SECOND FLOOR DEMOLITION PLAN
Scale: 1/4" = 1'-0"

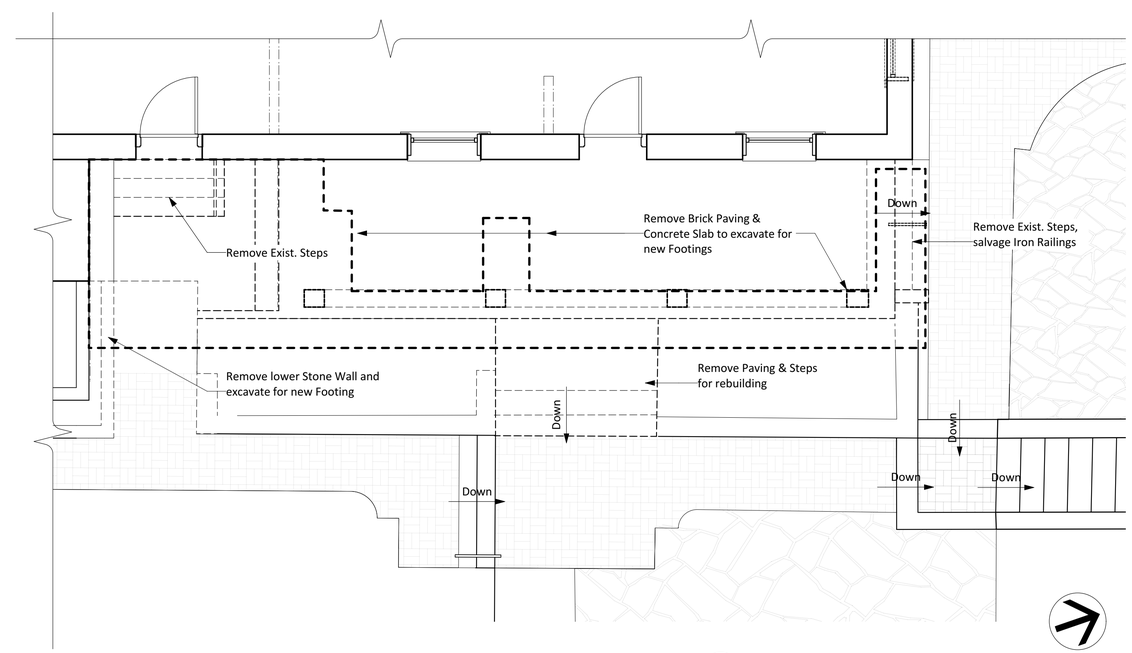

1 GROUND FLOOR DEMOLITION PLAN
Scale: 1/4" = 1'-0"

O'Connell
ARCHITECTURE
3908 Avenue B, #309
Austin, Texas 78751
512|751-1374

NOT FOR CONSTRUCTION
TERESA O'CONNELL
#15432

GERMAN FREE SCHOOL
507 E. 10th Street, Austin Texas 78701

ISSUE DATE
95% CONSTRUCTION DOCS
July 31, 2022

SHEET NAME
DEMO DRAWINGS

SHEET NUMBER
A-110

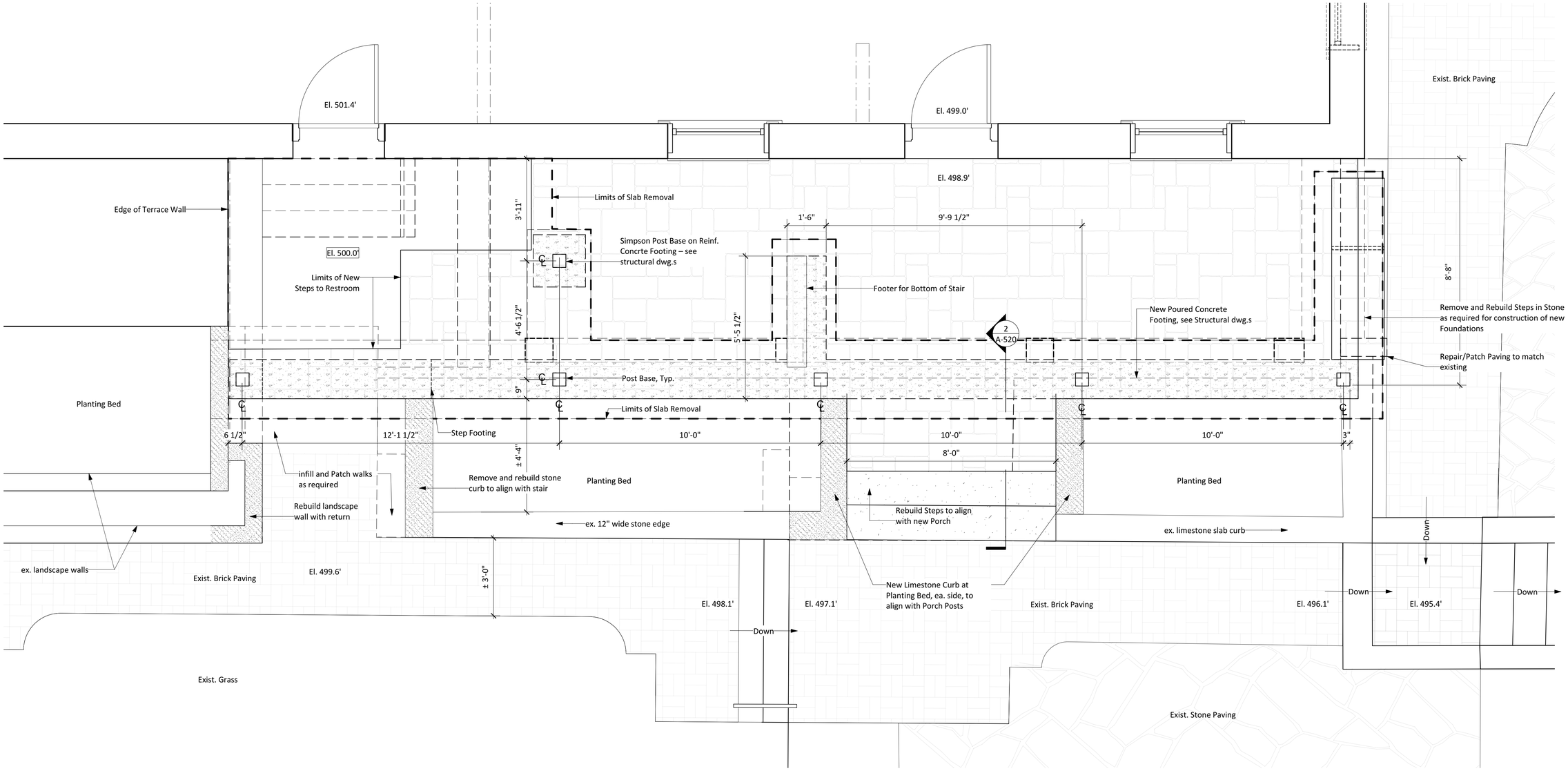

Note: New Paving for area below porch and rebuilt steps shall be Limestone flags. Existing Brick below Porch shall be salvaged for use to patch and repair existing brick walks adjacent to the porch and steps.

1 FOUNDATION & PAVING PLAN
Scale: 1/2" = 1'-0"

O'Connell
ARCHITECTURE
3908 Avenue B, #309
Austin, Texas 78751
512|751-1374

NOT FOR CONSTRUCTION
TERESA O'CONNELL
#15432

GERMAN FREE SCHOOL
507 E. 10th Street, Austin Texas 78701

ISSUE DATE
95% CONSTRUCTION DOCS
July 31, 2022

SHEET NAME
FOUNDATION & PAVING PLAN

SHEET NUMBER
A-120

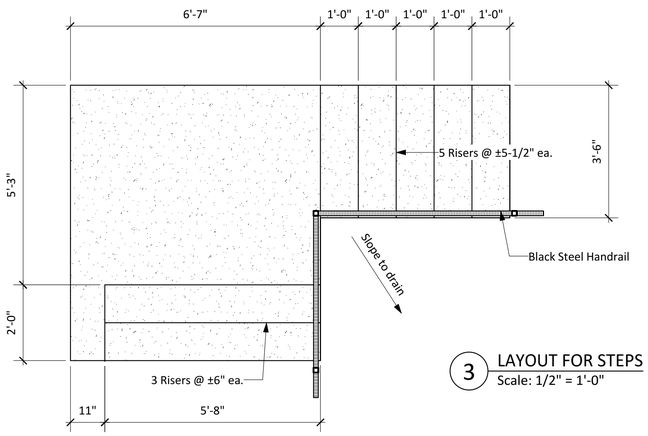

3 LAYOUT FOR STEPS
Scale: 1/2" = 1'-0"

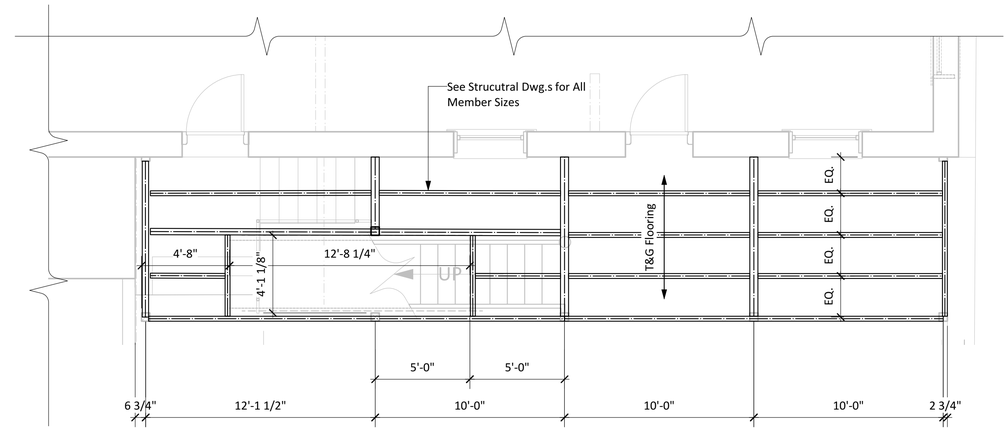

2 PORCH CEILING FRAMING
Scale: 1/4" = 1'-0"

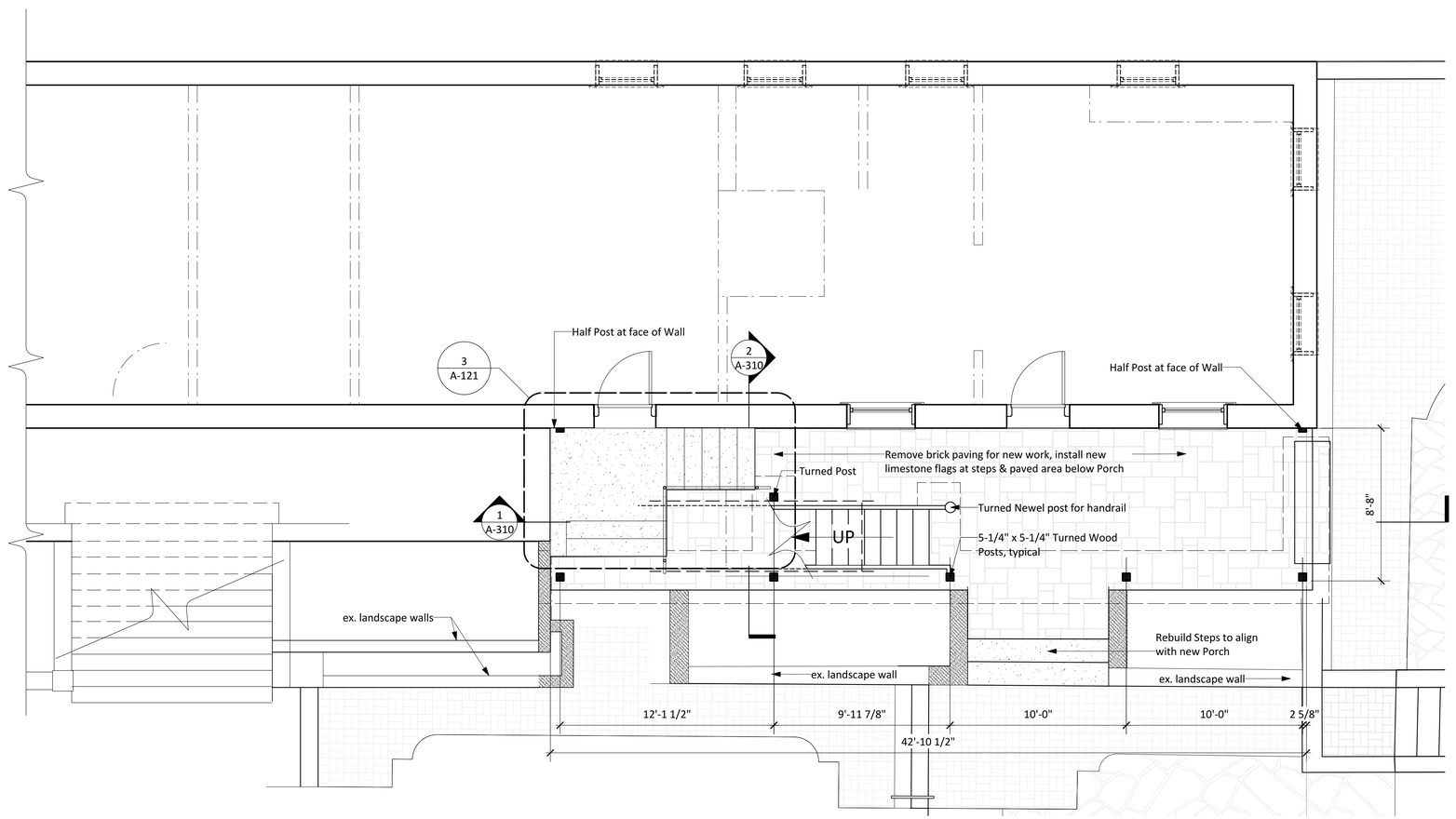

1 GROUND FLOOR PLAN
Scale: 1/4" = 1'-0"

O'Connell
ARCHITECTURE
3908 Avenue B, #309
Austin, Texas 78751
512|751-1374

NOT FOR CONSTRUCTION
TERESA O'CONNELL
#15432

GERMAN FREE SCHOOL
507 E. 10th Street, Austin Texas 78701

ISSUE DATE
95% CONSTRUCTION DOCS
July 31, 2022

SHEET NAME
GROUND FLOOR PLAN

SHEET NUMBER
A-121

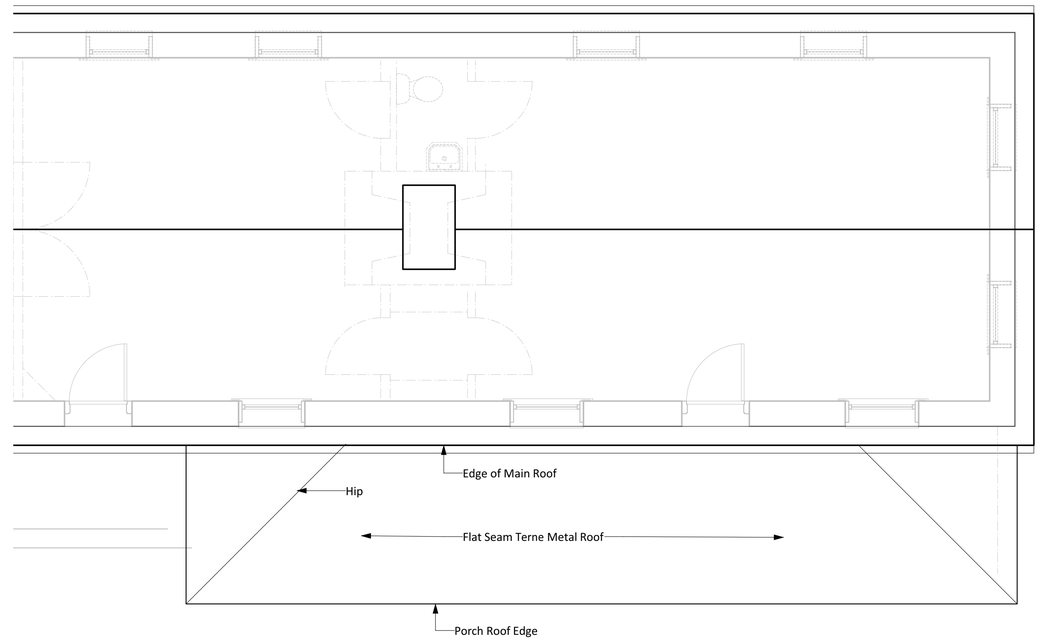

2 PORCH ROOF PLAN
Scale: 1/4" = 1'-0"

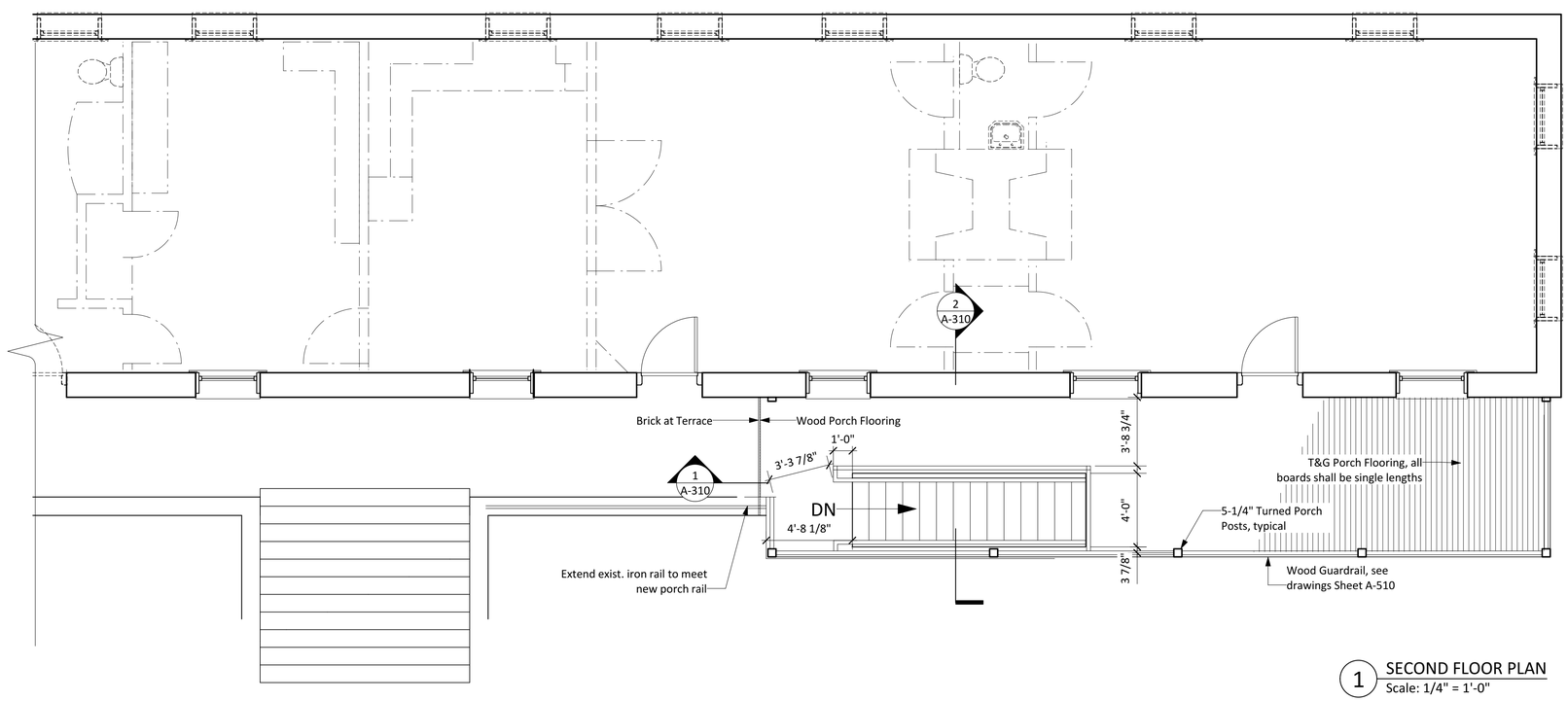

1 SECOND FLOOR PLAN
Scale: 1/4" = 1'-0"

O'Connell
ARCHITECTURE
3908 Avenue B, #309
Austin, Texas 78751
512|751-1374

NOT FOR CONSTRUCTION
TERESA O'CONNELL
#15432

GERMAN FREE SCHOOL
507 E. 10th Street, Austin Texas 78701

ISSUE DATE
95% CONSTRUCTION DOCS
July 31, 2022

SHEET NAME
SECOND FLOOR & ROOF PLAN

SHEET NUMBER
A-122

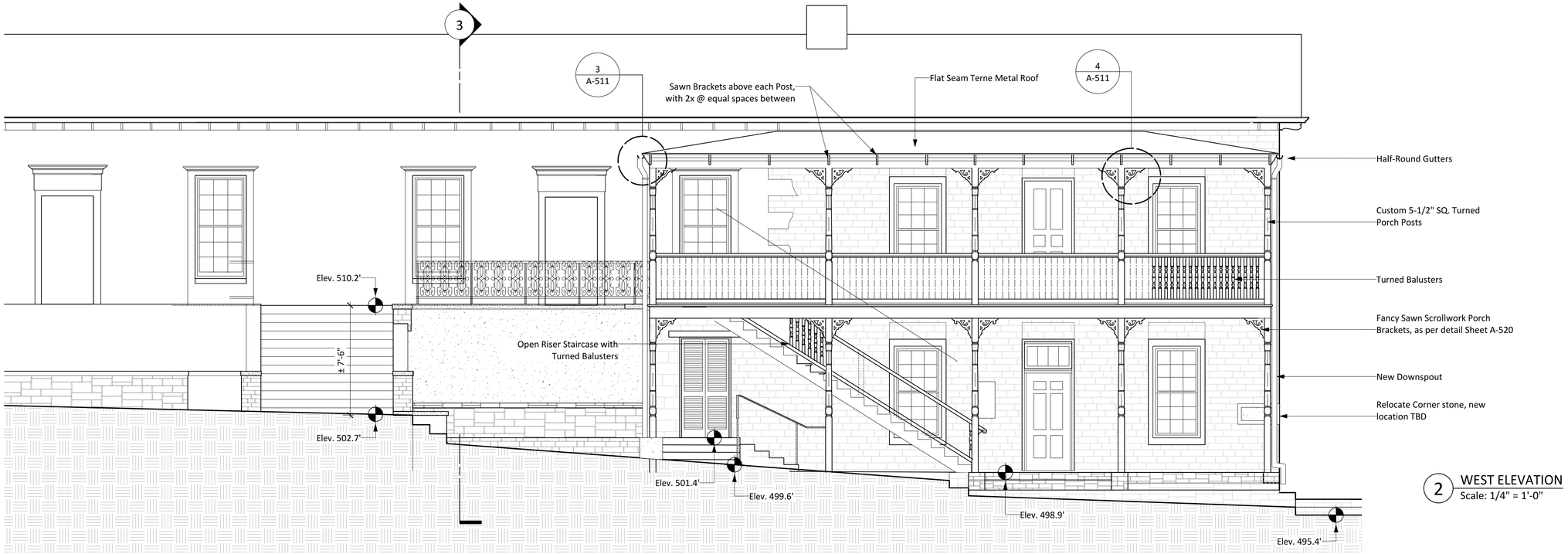

2 WEST ELEVATION
Scale: 1/4" = 1'-0"

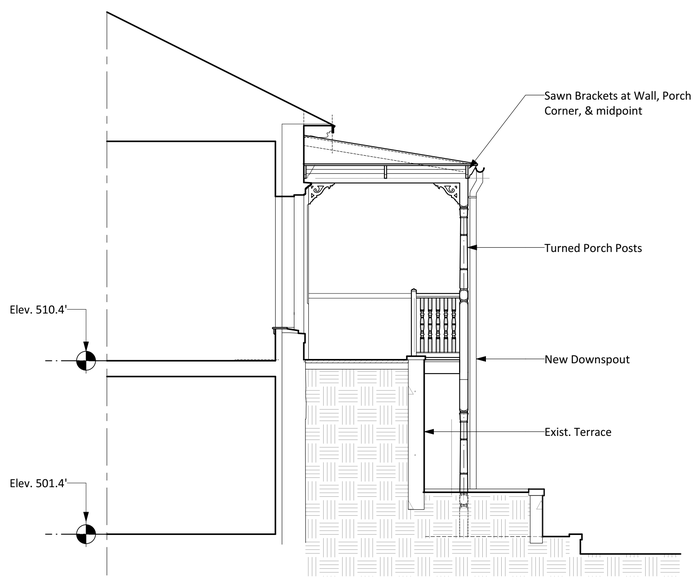

3 PARTIAL SECTION/NORTH ELEVATION
Scale: 1/4" = 1'-0"

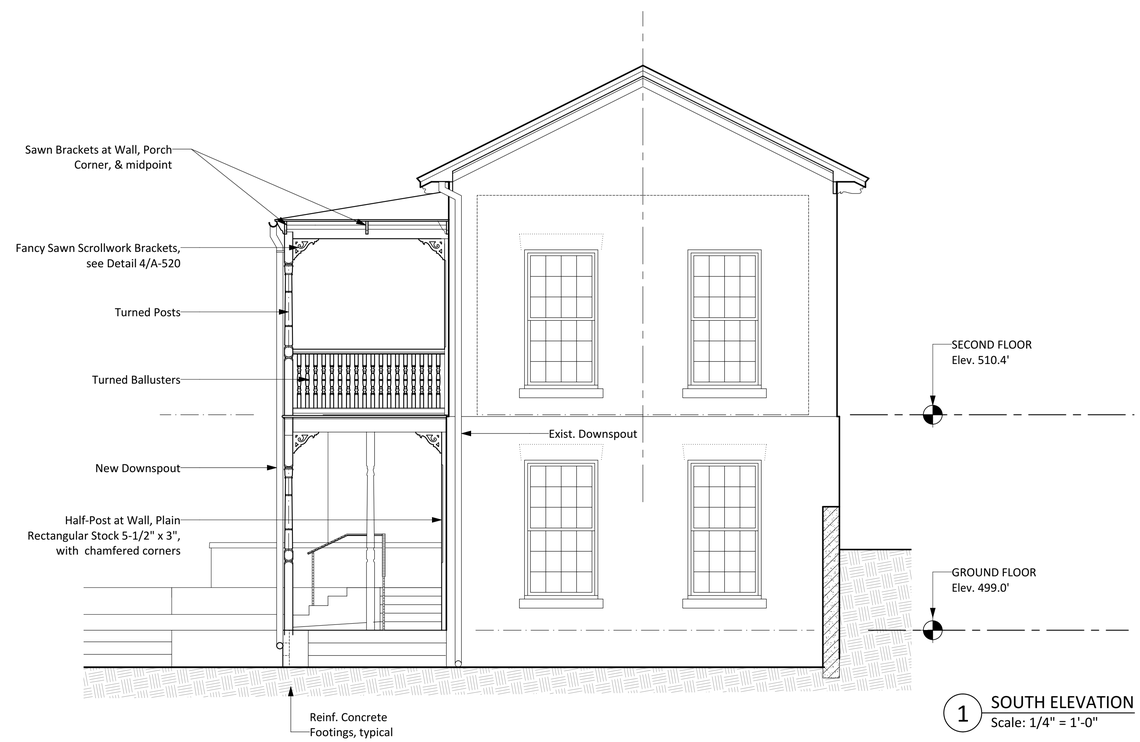

1 SOUTH ELEVATION
Scale: 1/4" = 1'-0"

O'Connell
ARCHITECTURE
3908 Avenue B, #309
Austin, Texas 78751
512|751-1374

NOT FOR CONSTRUCTION
TERESA O'CONNELL
#15432

GERMAN FREE SCHOOL
507 E. 10th Street, Austin Texas 78701

ISSUE DATE
95% CONSTRUCTION DOCS
July 31, 2022

SHEET NAME
ELEVATIONS

SHEET NUMBER
A-210

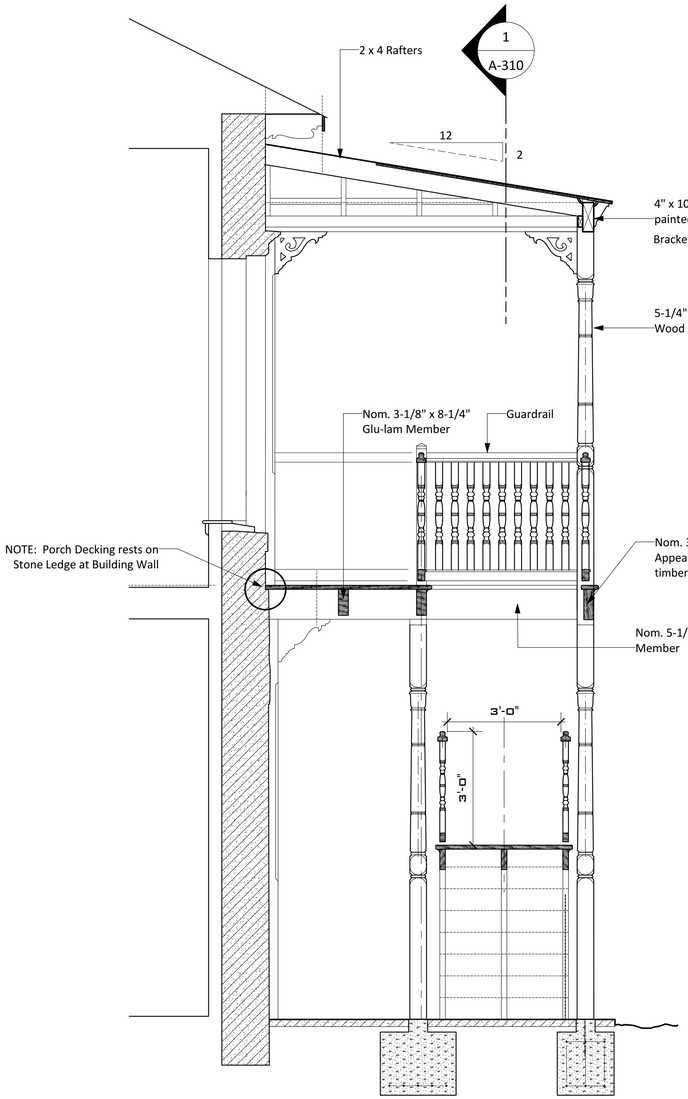

2 PORCH CROSS SECTION
Scale: 1/2" = 1'-0"

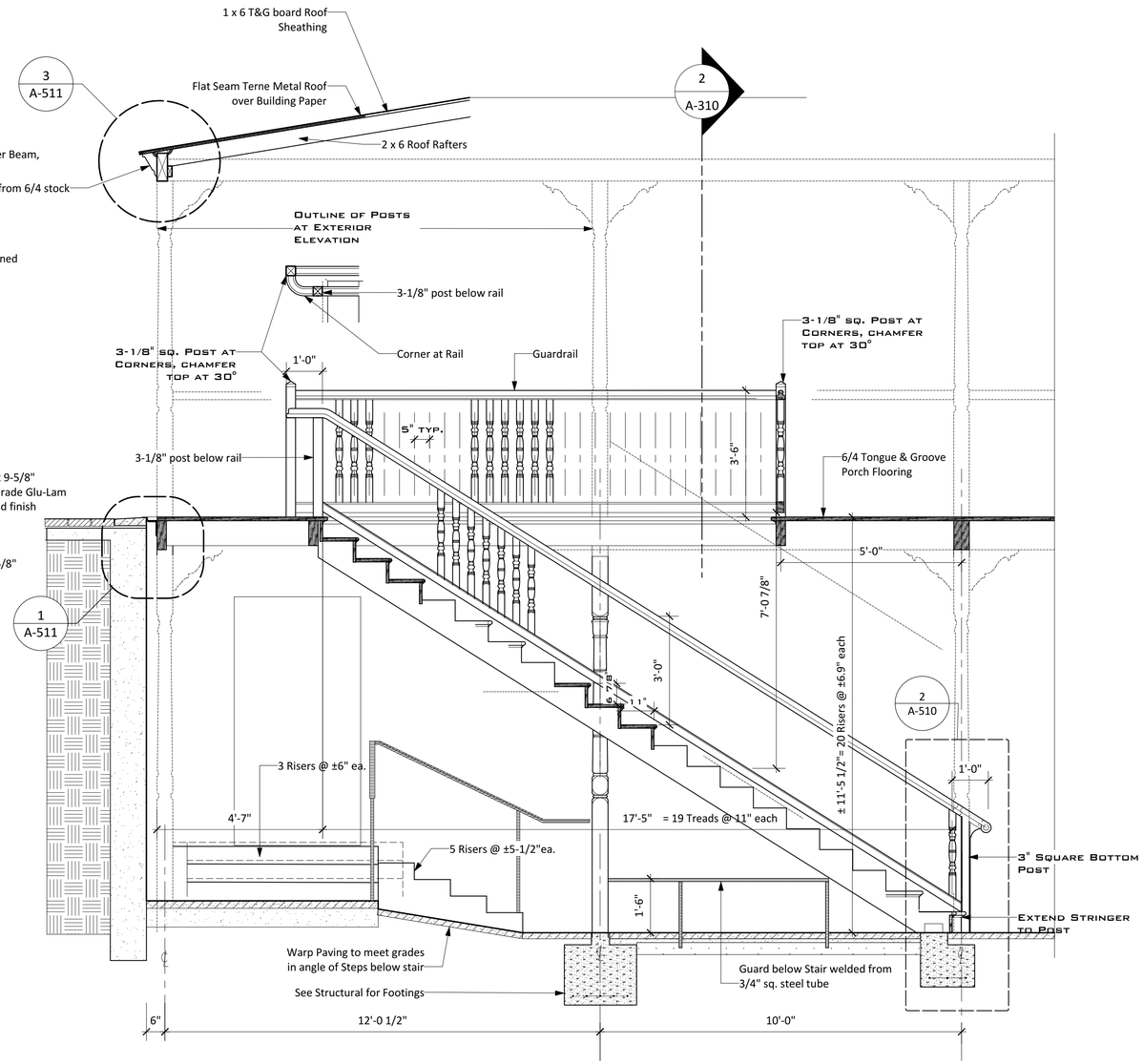

1 STAIR SECTION
Scale: 1/2" = 1'-0"

O'Connell
ARCHITECTURE
3908 Avenue B, #309
Austin, Texas 78751
512|751-1374

NOT FOR CONSTRUCTION
TERESA O'CONNELL
#15432

GERMAN FREE SCHOOL
507 E. 10th Street, Austin Texas 78701

ISSUE DATE
95% CONSTRUCTION DOCS
July 31, 2022

SHEET NAME
PORCH SECTION

SHEET NUMBER
A-310

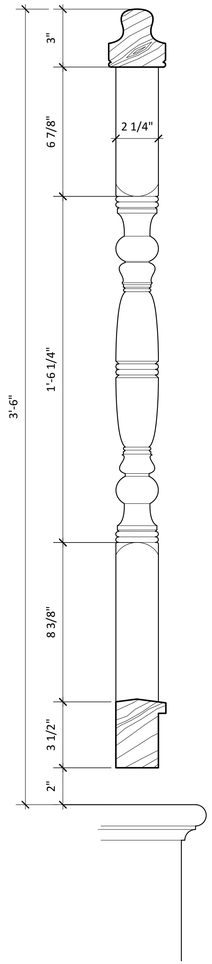

3 PORCH GUARD RAIL
Scale: 3" = 1'-0"

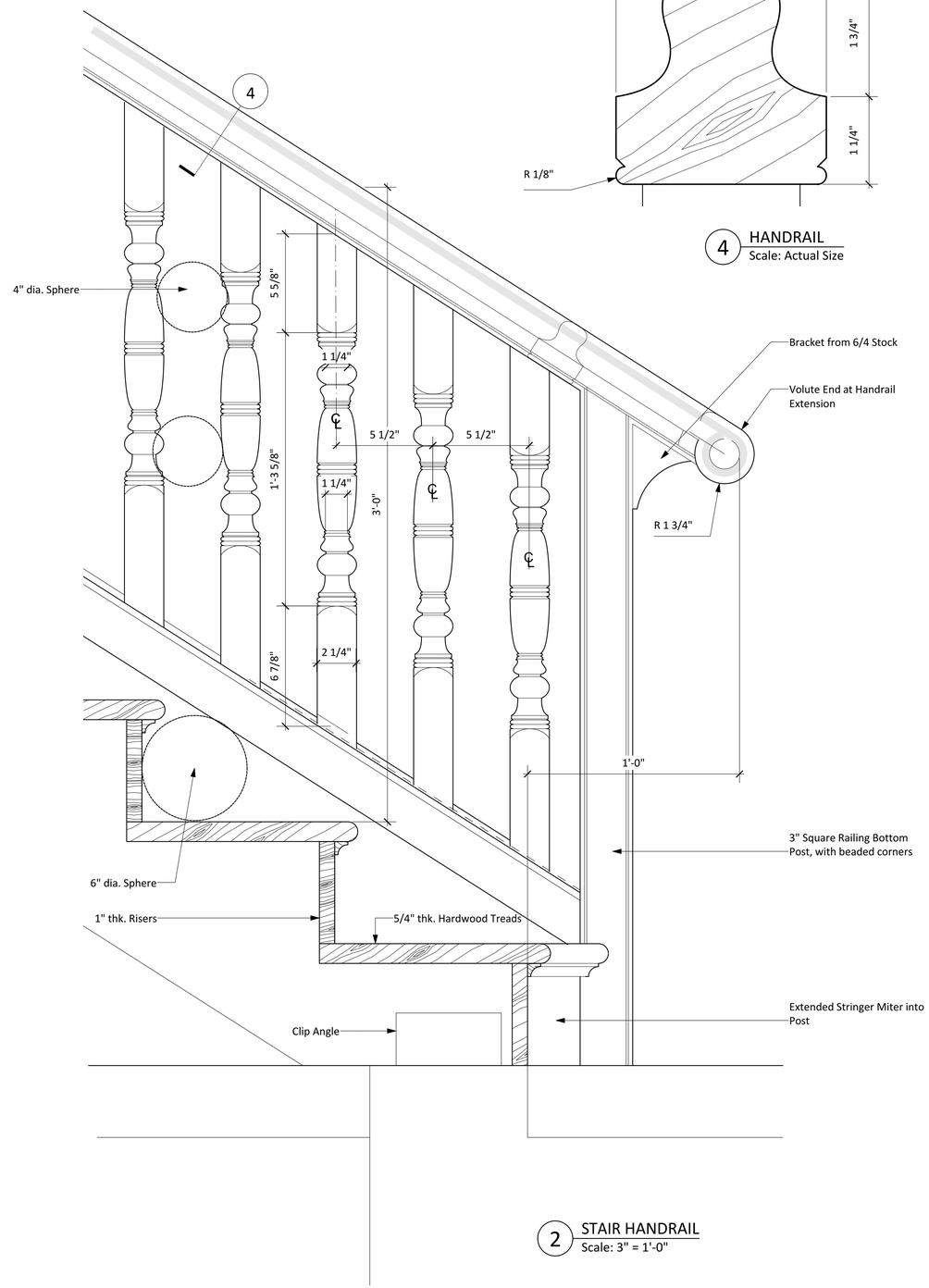

2 STAIR HANDRAIL
Scale: 3" = 1'-0"

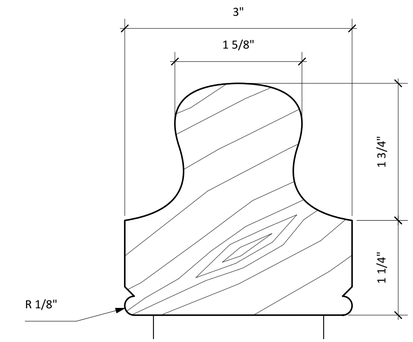

4 HANDRAIL
Scale: Actual Size

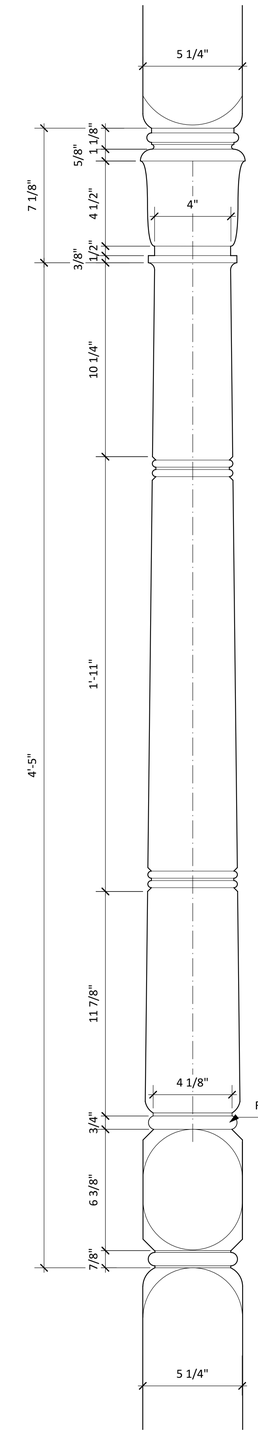

1 TURNED PORCH POST
Scale: 3" = 1'-0"

O'Connell
ARCHITECTURE
3908 Avenue B, #309
Austin, Texas 78751
512|751-1374

NOT FOR CONSTRUCTION
TERESA O'CONNELL
#15432

GERMAN FREE SCHOOL
507 E. 10th Street, Austin Texas 78701

ISSUE DATE
95% CONSTRUCTION DOCS
July 31, 2022

SHEET NAME
DETAILS

SHEET NUMBER
A-510

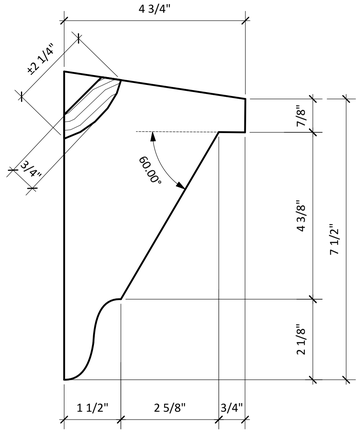

5 EAVE BRACKET LAYOUT
Scale: Half Actual Size

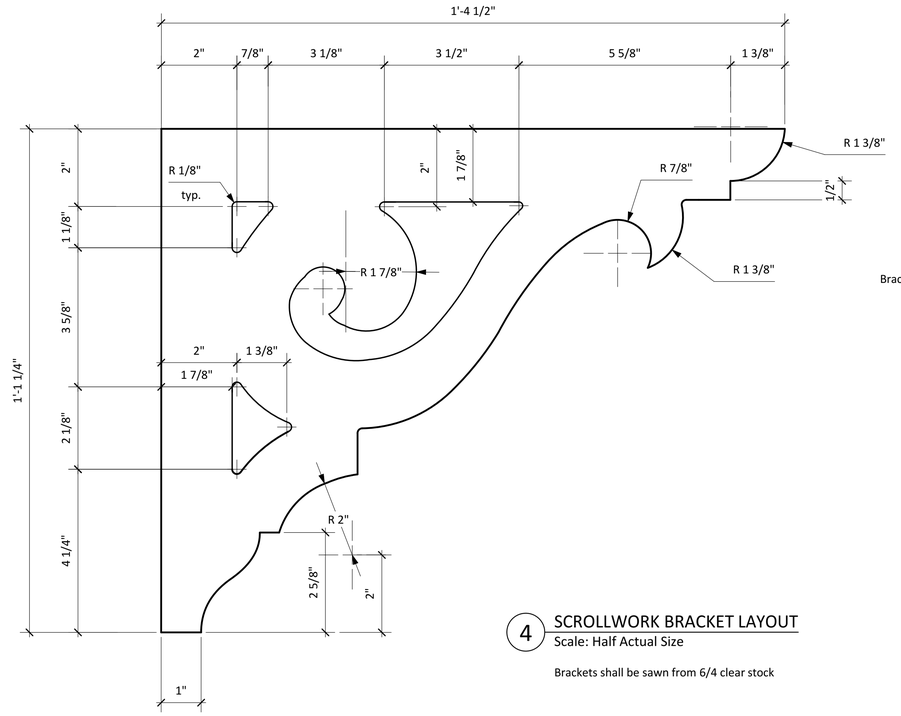

4 SCROLLWORK BRACKET LAYOUT
Scale: Half Actual Size

Brackets shall be sawn from 6/4 clear stock

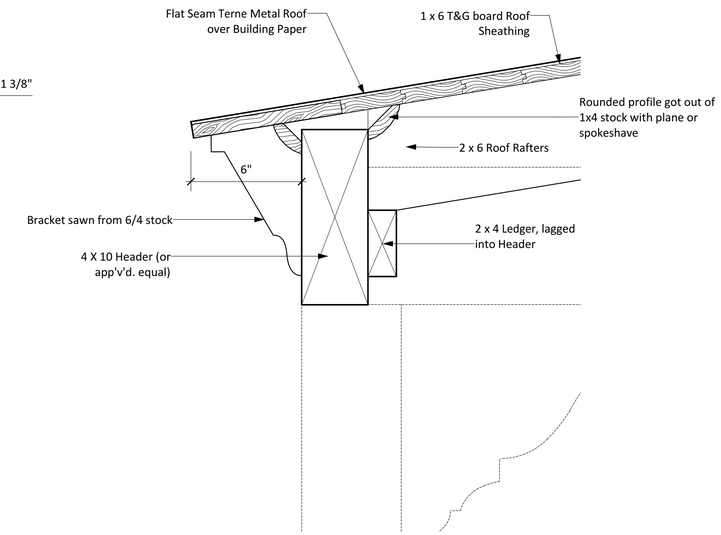

3 EAVE DETAIL
Scale: 3" = 1'-0"

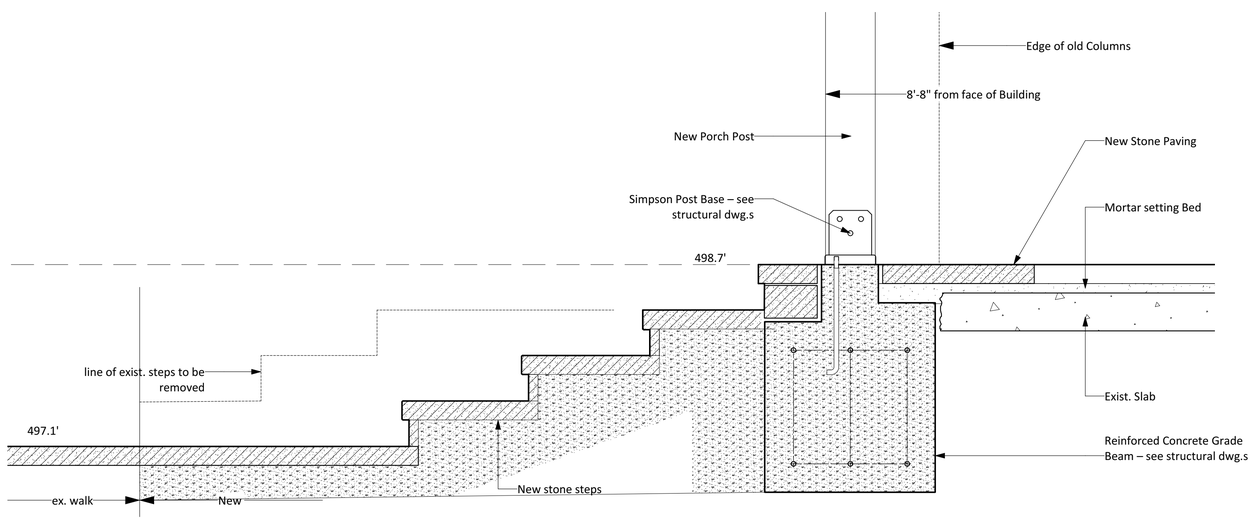

2 PORCH EDGE & STEPS
Scale: 1 1/2" = 1'-0"

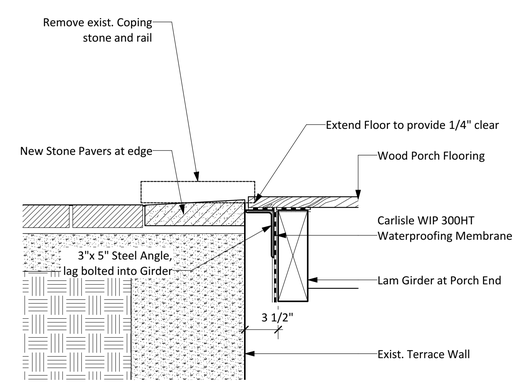

1 THRESHOLD DETAIL
Scale: 1 1/2" = 1'-0"

O'Connell
ARCHITECTURE
3908 Avenue B, #309
Austin, Texas 78751
512|751-1374

NOT FOR CONSTRUCTION
TERESA O'CONNELL
#15432

GERMAN FREE SCHOOL
507 E. 10th Street, Austin Texas 78701

ISSUE DATE
95% CONSTRUCTION DOCS
July 31, 2022

SHEET NAME
DETAILS

SHEET NUMBER
A-511

01010 SUMMARY OF THE WORK

SCOPE: The extent of work covered in this contract is shown on the drawings in these specifications, and includes:

1. Removal of the existing porch, paving, steps and walks below porch.
2. New concrete foundations for the existing and new portions of the house, including new slab for
3. New concrete front entry steps and masonry wing walls at front entry
4. Exterior wood repair and painting

The Work will be constructed under a single prime contract.

Project Location: German-Texan Heritage Society, 507 E. 10th Street, Austin, TX 78701

OWNER:

A. The Owner referred to in these Contract Documents is German-Texan Heritage Society, as represented by Christopher Markley, Executive Director, 507 E. 10th Street, Austin, TX 78701

ARCHITECTURAL AND ENGINEERING:

A. Architecture: O'Connell Architecture, LLC, as represented by Tere O'Connell, AIA, 3908 Avenue B, Room 309, Austin, Texas 78751. Contact information: 512/751-1374, tere@ocpreservation.com

B. Structural Engineering: Tsen Engineering, LLC, as represented by Jamie Buchanan, P.E., 210 Barton Springs Road, #250, Austin, Texas 78704.

WORK IN HISTORIC STRUCTURES

A. General: Historical classification of this building requires Contractor to exercise special caution in executing all stages of work to prevent unnecessary damage to historical features, condition, or materials.

B. Contractor shall meet with the architect and develop a plan for protection of the adjacent historic construction.

C. Contractor to apprise all sub-contractors and workmen of special precautions required when working with historic buildings.

D. Contractor to monitor the work of all trades to prevent unnecessary or otherwise avoidable damage to historical features, conditions, or materials.

E. Contractor shall immediately notify Architect and Owner as concealed historical conditions are uncovered during the course of the work and shall allow and facilitate the documentation of those conditions.

F. Governing Preservation Requirements: The German-Texan Heritage Society building is subject to the provisions of the Secretary of the Interior's *Standards for Rehabilitation*. This project must comply with requirements as administered by the Texas Historical Commission (THC) to qualify for state and federal tax credits. The THC has authority to review the progress and completion of the Work.

SITE AVAILABILITY

Make the site available and accessible to representatives of the Texas Historical Commission upon request and as required within these specifications.

CONTRACTOR USE OF PREMISES:

Limit use of site to areas impacted by work defined in contract documents.

Protect all landscaping to remain.

Temporary Facilities

Portable Toilet: Locate portable toilet at least 20' away from all structures and away from the front yard, in a serviceable location. Schedule regular maintenance of portable toilets to prevent disruption or inconvenience to the Owner.

Temporary Office: Contractor may supply their own desk and will provide all tools and equipment as needed to complete the project.

Enclosure Fencing for Construction Staging Area: At Contractor's discretion, provide galvanized 2-inch, chain link fencing 6-feet high with galvanized steel pipe posts, 1-1/2" I.D. for line posts and top posts and 2-1/2" I.D. for corner posts. Provide 6-foot high gates fabricated from galvanized steel pipe and galvanized 2-inch chain link fabric fencing as required for access; gates to be secured with locks and one key to be provided to Owner.

Material storage is allowed with prior Owner approval when kept in an orderly and protected manner at the east side of the property.

Communication Services: Provide Project Superintendent/ Manager with continuous access to internet and cell phone service during working hours.

Standards: Comply with NFPA Code 241, "Building Construction and Demolition Operations", ANSI-A10 Series standard for "Safety Requirements for Construction and Demolition."

Utilities: Owner shall provide access to electrical service and water for Contractor use. Contractor shall provide all hoses and OSHA compliant power cords as needed to complete the work.

Do not allow water to run or drip during construction – repair leaks immediately to avoid damage to property and/ or wasteful use.

SUPERVISION AND STAFFING

Project supervision shall include a Project Superintendent who is on site at all times when work is underway. Contractor is expected to monitor the work of all trades to prevent unnecessary or otherwise avoidable damage to original features, conditions, or materials.

SUBCONTRACTORS:

This project anticipates the use of subcontractors to perform aspects of work. These persons or entities will contract directly with the Contractor to perform their defined scope of work.

The Contractor will furnish in writing to the Owner through the Architect the names of persons or entities (including those who are to furnish materials or equipment fabricated to a special design) proposed for each principal portion of the work.

Should the Architect or Owner identify a reasonable objection to a proposed subcontractor within 14 days, the Contractor shall find another acceptable subcontractor to perform the work in question. As a result, contract adjustments for cost and time may be required.

DRESS AND CONDUCT:

Minimum street dress shall include shoes, long pants or shorts, and shirt at all times.

Amplified music, foul language, and/or smoking will not be permitted on the site.

Do not allow personal trash or debris to accumulate on site – dispose of all waste by the end of each work day.

01200 PROJECT ADMINISTRATION, SUBMITTALS, PAYMENTS, AND CLOSEOUT:

SCOPE: This section covers highlights of project administration, payments, and project closeout, and is intended as a supplement to the Uniform General Conditions and Supplemental Conditions.

SUBMIT:

1. Insurance
2. Construction Schedule
3. Schedule of Values
4. Applications for Payment
5. Record Documents
6. Substantial Completion Punch List
7. Extra Stock and Materials

CONSTRUCTION SCHEDULE: should indicate:

Milestone start-up, span, and completion dates for defined scopes of work. The construction period is anticipated to be 180 days from date of contract signing to Final Completion.

Mock up review dates

Substantial Completion

Final Completion

Provide for a reasonable number of inclement weather days based upon the past 5 years of weather performance in Austin for the anticipated period of construction.

SCHEDULE OF VALUES:

The Schedule of Values shall break down project costs in accord with the following minimum categories **OR APPROVED EQUAL**. Greater detail may be provided at Contractor's discretion.

1. Project Administration, (including Temporary Facilities and Temporary Protection)
2. Selective Demolition
3. Site Work
4. Foundation
5. Concrete Stairs, Sidewalks, and Pads
6. Masonry
7. Metal Handrails
8. Wood Framing
9. Finish Carpentry, Repair of Existing Windows and Doors
10. Roofing, Gutters and Downspouts
11. Painting

APPLICATIONS FOR PAYMENT:

Submittals: Payments to the Contractor shall be made twice per month as stipulated in General Conditions of the Contract for Construction (AIA document A201 or approved equal). Contractor shall submit one draft electronically for review and one final copy of each Application for Payment to the Architect for certification.

Retainage: The Owner will retain 5 percent (5%) of each payment until Project Completion.

Timeliness of Payment: Payment of approved Applications for Payment will be made within 10 working days of approval.

01200 PROJECT MEETINGS:

Conduct progress meetings at the Project site at regularly scheduled intervals. Meetings shall include a review of Contractor's payment request when applicable, review of progress in relationship to schedule, review of mock-ups, and discussion of upcoming work. Coordinate dates of meetings with preparation of the payment request. Provide an updated Progress Schedule at each Progress Meeting. Advise the Architect and Owner of scheduled meeting dates.

PROJECT COORDINATION:

Coordination: Contractor shall coordinate work between all trades in this contract. Any conflicts shall be brought to the Architect's attention prior to the work being installed for resolution.

Verification of dimensions: Contractor shall check and verify all dimensions, building elevations, and conditions both existing and new. Report any and all discrepancies to the architect before beginning any phase of work. Do not scale drawings. Contractor is responsible for field dimensions and measurements including slope.

Protection of building and site: contractor shall protect all surfaces not scheduled for work under this contract. Any damage to the existing structure and site that occurs following the notice to proceed shall be corrected to pre-construction condition at no expense to the owner. Contractor shall keep the building secure and weather-tight at all times.

Safety: perform all work in a safe and conscientious manner to prevent injuries and damage to the building, its contents, or its surroundings. Contractor shall maintain OSHA standards for job safety and worker protection and comply with all requirements of the Health And Safety Code Of Texas, Chapter 756, Subchapter c for adequate trench protection, barricades, signs, etc.

Storage: establish a secure storage area for all items marked "remove for reinstallation" or "remove and salvage". Storage is to be a protected, secure, weatherproof location to prevent damage to materials.

REQUESTS FOR INFORMATION:

The Contractor may request clarifications and instructions regarding the Contract Documents. A Request for Information (RFI) is a means for which the Contractor shall use to request such guidance and instruction from the Architect. These are to be sequentially numbered and an RFI register shall be maintained by the Contractor. This register shall be updated and regularly scheduled progress meeting.

01300 SUBMITTALS:

Coordination: Coordinate preparation and processing of submittals with performance of the Work. Transmit each submittal to the Architect sufficiently in advance of scheduled performance of related construction activities to avoid delay.

A. Coordinate each submittal with fabrication, purchasing, testing, delivery, other submittals and related activities that require sequential activity.

B. Coordinate transmittal of different types of submittals for the same element of the Work and different elements of related parts of the Work so that processing will not be delayed by the Architect or Engineer's need to revise submittals concurrently for coordination.

C. The Architect reserves the right to withhold action on a submittal requiring coordination with other submittals until related submittals are received.

D. Submittals received after installation of the submitted material or product is complete will be rejected and the work shall be removed.

Submittal Preparation: Place a permanent label or title block on each submittal for identification. Indicate the name of the firm or entity that prepared each submittal on the label or title block. Include: Project title, name of owner, name of contractor, name of architect, date of submittal, specification section referenced, drawing details where appropriate, and contractor certification of accuracy.

In the submittal and construction process, the Contractor is responsible for:

A. Dimensions, which shall be confirmed and correlated at the job site

B. Fabrication processes and techniques of construction

C. Coordination of work with that of all other trades

D. Satisfactory performance of work under this contract.

Product Data: Provide where requested in specifications. Product Data to includes printed information such as manufacturer's installation instructions, catalog cuts, standard color charts, roughing-in diagrams and templates, standard wiring diagrams and performance curves.

A. Mark options available to the project

B. Mark selections requiring architectural or engineering confirmation

C. Do not submit MSDS sheets – this information is for contractor use, not the architect.

Samples: Where specified, submit Samples physically identical with the material or product proposed for use; submit full-size, fully fabricated Samples, cured and finished in the manner specified.

Coordinate Architect's review of required Samples with regularly scheduled Project Meetings, as indicated in Construction Schedule.

Mock Ups are intended to fully and accurately represent the proposed installed quality, detailing, and installation techniques to be used in the Work.

Coordinate Architect's review of required Mock Ups with regularly scheduled Project Meetings, as indicated in Construction Schedule.

Process and Actions:

The Architect, in consultation with the Owner, will accept, provide comments, or reject submittals, and convey that information back to the Contractor.

01380 – CONSTRUCTION PHOTOGRAPHS

GENERAL

Submit digital images to meet the following requirements

CONTENT:

A. Pre-construction photographs representative of all conditions.
B. Images of utilities and systems that will be concealed below slabs, behind walls, and above ceilings before they are covered up.
C. Photos of conditions requiring input from others as needed during the course of construction.
D. Final completion photographs representative of all areas.

QUALITY:

A. Color images with a minimum resolution of 3264 x 2448 pixels (typical of current model iPhone)

B. Focus, lighting and composition as needed to convey intended information

FORMAT:

Name each image using the following format: GFS_YEAR-MM-DD_View-##

A. View is a brief description of the image

B. ## is a sequential number for the images taken on that date.

MEDIA:

Submit digital photographs on a dedicated flash drive that is PC-and MAC-compatible. Clearly label storage device GFS-CONSTRUCTION PHOTOGRAPHS (DATE)

TIME:

Submit photographs according to the following schedule:

A. Pre-Construction Photographs shall be submitted and accepted within one month of project start up

B. Progress and Project Completion photographs shall be submitted and accepted prior to Final Project Close Out.

C. Photographs as needed for communication throughout the course of construction shall be submitted on an "as needed" basis.

01600 CUTTING AND PATCHING:

SCOPE

General Contractor shall be responsible for all cutting and patching that is required for the completion of any subcontractor's work. This shall include all necessary blocking and framing. Blocking/patching material shall be of solid wood of same species and size of adjacent material.

Report any unexpected findings to Architect immediately upon discovery.

01700 PROJECT CLOSEOUT

EXTRA STOCK AND MATERIALS:

Convey extra stock to Owner at Substantial Completion, including:

A. Architectural woodwork, including spare molding, flooring, balusters and rail sections
B. Paint
C. Stone remnants

RECORD DOCUMENTS:

During the construction period, maintain a complete set of Contract Drawings, Shop Drawings, Coordination Drawings, Addenda, Submittals, and Project Correspondence at the jobsite for documenting work during construction. Mark these Drawings to indicate the actual installation where the installation varies appreciably for the installation shown originally. Give particular attention to information on concealed elements that would be difficult to identify or measure and record later. Items required to be marked include but are not limited to:

A. Dimensional changes to the Drawings.
B. Revisions to details shown on the Drawings.
C. Changes made by Change Order.
D. Details not on original Contract Drawings.

SUBSTANTIAL AND FINAL COMPLETION:

Scheduling of visits relating to Substantial and Final Completion shall be at the written notification of the General Contractor as per the General Conditions.

Project Closeout will be accomplished with the certification by the Architect of the General Contractor's Final Application for Payment. General Contractor must submit prior to Project Closeout:

A. Contractor's warranty
B. Manufacturer's warranties
C. maintenance instructions
D. equipment manuals
E. extra materials
F. record documents
G. building permit documentation including Certificate of Occupancy

01790 WARRANTIES:

SCOPE:

The Contractor shall guarantee all work under this Contract against defects in material and workmanship for a minimum period of **one (1) year** from the date of Substantial Completion, and shall replace any work showing defects during this guarantee period without expense to the Owner. Where guarantees or warranties for longer terms are written into, required by, or referred to in any Division of these specifications, they shall apply.

Provide Owner with extended material warranties at Project Closeout in the following sections

Section 07611 Metal Roofing

Section 09900 Exterior Painting

02300 EARTHWORK:

SCOPE:

A. Protect Heritage Trees in yard.
B. Verify soundness of all downspout connections to subgrade drainage system.
C. Grade yard to provide positive drainage away from building.

JOB CONDITIONS:

Barricade open excavations occurring as part of this work and post with signage and/or warning lights as recommended by authorities having jurisdiction. Protect structures, utilities, trees, sidewalks and planting beds to remain from damage caused by settlement, lateral movement, undermining, washout and other hazards created by earthwork operations.

Bulk Materials:

Do not dump or store bulk materials near structures, utilities, walkways and pavements, or on existing turf areas or plants.

Provide erosion-control measures to prevent erosion or displacement of bulk materials; discharge of soil-bearing water runoff; and airborne dust reaching adjacent properties, water conveyance systems, or walkways.

PROTECTION OF EXISTING TREES:

Protect all existing trees and other vegetation in the work area against unnecessary cutting, breaking or skinning of roots, skinning or bruising of bark, smothering of trees by stockpiling construction materials or excavated materials within drip line, excess foot or vehicular traffic, or parking of vehicles within drip line. Provide temporary guards to protect trees and vegetation.

Heritage Tree: Live oak trees in sideyard are protected by the City of Austin tree ordinance. Construct a 4' chain link fence at the perimeter of the ½ Critical Root Zone (marked CRZ on A-101). Water the tree on a regular basis in times of low precipitation throughout construction.

SUBGRADE DRAINS:

Determine the condition of the existing downspout drain system and report findings to Owner and Architect. Coordinate repairs if needed before work continues. Subgrade drain system work may be required. If so, they will be considered as an added cost.

UTILITIES:

Locate all existing underground utilities before beginning work. Maintain all existing utilities not indicated to be removed. Coordinate with utility companies to temporarily shutoff services during excavation if lines are active.

MULCH:

Provide Landscaper's Mix mulch or approved equal as needed for heritage tree protection. Apply 3" of mulch around ½ Critical Root Zone, and maintain throughout the course of the project.

INSTALLATION

GRADING:

Uniformly grade areas to a smooth surface, free from irregular surface changes. Comply with compaction requirements and grade to cross sections, lines, and elevations indicated.

A. Provide a smooth transition between existing adjacent grades and new grades.

B. Cut out soft spots, fill low spots, and trim high spots to conform to required surface tolerances.

C. Avoid any impacts to ¼ Critical Root Zone of the Heritage Tree.

D. Do not disturb more than 4" of topsoil within the ¼ - ½ Critical Root Zone of the Heritage Tree.

Slope grades to direct water away from buildings and to prevent ponding. Finish subgrades to required elevations within the following tolerances:

Lawn or Unpaved Areas: Grade to drain away from the house at 8% slope

Repair and reestablish grades to specified tolerances where completed or partially completed surfaces become eroded, rutted, settled, or lose compaction due to subsequent construction operations or weather conditions.

Settling: Where settling occurs during the Project correction period, remove finished surfacing, backfill with additional approved material, compact, and reconstruct surfacing.

Restore appearance, quality, and condition of finished surfacing to match adjacent work, and eliminate evidence of repair to the greatest extent possible.

02410 SELECTIVE DEMOLITION

SCOPE

Includes full removal and disposal of the following items and elements:

A. Existing wood porch and roof

B. Steps to restroom

C. Existing concrete foundation

D. Brick paving below existing porch

Includes removal and salvage for reinstallation of the following items and elements:

A. Iron railings and stair rails

B. Existing Corner Stone and Historical Markers

C. Stone paving

Includes removal and salvage to Owner of the following items and elements:

A. Iron railing sections

DEMOLITION requires that the selective removal, salvage, or reinstallation of certain elements of work be supervised or performed by the entity responsible for subsequent repair and restoration.

PROVIDE AND INSTALL temporary weather-tight protection for any parts of the exterior wall, roof, windows and doors that are open

O'Connell
ARCHITECTURE
3908 Avenue B, #309
Austin, Texas 78751
512|751-1374

NOT FOR CONSTRUCTION
TERESA O'CONNELL
#15432

GERMAN FREE SCHOOL
507 E. 10th Street, Austin Texas 78701

ISSUE DATE

95% CONSTRUCTION DOCS
July 31, 2022

SHEET NAME

SPECIFICATIONS

SHEET NUMBER

A-900

during construction. Remove protection at completion of work. Repair any damaged incurred as a result of inadequate protection at no expense to the Owner.

REMOVE AND SALVAGE FOR REUSE: All work designated "remove and salvage for reuse" shall be completed by the subcontractor or tradesman who will be performing the reinstallation. Carefully remove designated element to secure storage in preparation for reinstallation.

IF UNANTICIPATED mechanical, electrical or structural elements which conflict with intended function or design are encountered, investigate and measure both nature and extent of the conflict. Submit report to Architect in written, accurate detail. Pending receipt of directive from Owner, rearrange selective demolition schedule as necessary to continue overall job progress without delay.

REPAIR demolition performed in excess of that required. Return structures and surfaces to remain to conditions existing prior to commencement of selective demolition work. Repair adjacent construction or surfaces soiled or damaged by selective demolition work.

02780 STONE PAVING:

SCOPE:

Paving below reconstructed porch, paved walks, stone veneered steps and landscape borders

ADDITIONAL REQUIREMENTS:

Refer to S-002 Structural Notes for additional Masonry requirements.

COORDINATE:

Coordinate masonry work with concrete foundation, metal handrails, and sub-grade drainage work.

SUBMIT:

Product data for each material used in mortar. Include source of sand aggregate.

Sample(s) of mortar color and copy of final mortar mix to match existing.

Stone samples: Full-size units of each different limestone unit for each color, finish, and pattern specified, showing full range to be expected.

MOCK-UPS:

Create a mock up to match existing construction to demonstrate techniques for masonry finishing. Accepted mockup may be incorporated into final work.

REFERENCES:

ASTM C91-01: Standard ASTM C144-03: Standard Specification for Aggregate for Masonry

ASTM C150-02ae1: Standard Specification for Portland Cement.

ASTM C207-97: Standard Specification for Hydrated Lime for Masonry Purposes.

MATERIALS:

LIMESTONE: Material Quality Standard: ASTM C 568, Classification II or III. To match character and color of original material – Note that existing stone shall be salvaged for reuse .

SAND: ASTM C144, screened, graded, and with natural coloring and variation to match original mortar character.

LIME: Hydrated, ASTM C207, Type S.

CEMENT: ASTM C150, Type I, non-staining white cement complying with staining requirement of ASTM C91 for not more than 0.03% water soluble alkali.

WATER: Potable, clean, free of oils, acids, alkalis and organic matter.

EXECUTION:

PROPORTIONS: Comply with ASTM C270, Proportion Specification, Type S and as indicated on S-002

MIXING MORTAR: Measure cementitious and aggregate material in a dry condition by volume or equivalent weight. Do not measure by shovel; use known measure. Mix materials in a clean mechanical batch mixer. Thoroughly mix cementitious and aggregate materials together before adding any water. Then mix again adding only enough water to produce a damp, unworkable mix that will retain its form when pressed into a ball. Maintain mortar in this dampened condition for 1-to 2-hours. Add remaining water in small portions until mortar of desired consistency is reached. Mix mortars in mechanical type batch mixer for not less than 3 minutes after all materials including water are in the drum. Use mortar within 30 minutes of final mixing; do not retemper or use partially hardened material. Do not use admixtures of any kind in mortar, unless otherwise indicated.

INSTALLATION:

Installation Quality Standards: In addition to standards specified elsewhere, perform work according to following, unless otherwise specified:

General Requirements:

A. Mix pavers from several pallets or cubes, as they are placed, to produce uniform blend of colors and textures.
B. Cut unit pavers with motor-driven masonry saw equipment to provide clean, sharp, unchipped edges. Cut units to provide pattern indicated and to fit adjoining work neatly. Use full units without cutting where possible. Hammer cutting is not acceptable.
C. Do not use unit pavers with chips, cracks, voids, discolorations, and other defects that might be visible in finished work.

Steps: Install paver steps before installing adjacent pavers.

Tolerances: Do not exceed 1/16 inch unit-to-unit offset from flush (lippage) nor 1/8 inch in 24 inches and 1/4 inch in 10 feet from level, or indicated slope, for finished surface of paving.

MORTAR SETTING BED APPLICATIONS

Sub-base Preparation: Saturate concrete sub-base with clean water several hours before placing setting bed. Remove surface water about one hour before placing setting bed.

Placing Mortar Setting Bed:

1. Apply mortar bed bond coat over surface of concrete subbase about 15 minutes before placing setting bed.
2. Limit area of bond coat to avoid its drying out before placing setting bed.
3. Do not exceed 1/16 inch thickness for bond coat.
4. Apply mortar bed over bond coat immediately after applying bond coat.
5. Spread and screed setting bed to uniform thickness at subgrade elevations required for accurate setting of pavers to finished grades indicated.
6. Place mortar bed with reinforcing wire fully embedded in middle of setting bed.
7. Spread and screed setting bed to uniform thickness at subgrade elevations required for accurate setting of pavers to finished grades indicated.
8. Mix and place only that amount of mortar bed that can be covered with pavers before initial set.
9. Cut back, bevel edge, remove, and discard setting-bed material that has reached initial set before placing pavers.

Setting Pavers:

1. Place pavers before initial set of cement occurs.
2. Immediately before placing pavers on setting bed, apply uniform 1/16 inch thick, slurry bond coat to bed or to back of each paver with a flat trowel.
3. Tamp or beat pavers with a wooden block or rubber mallet to obtain full contact with setting bed and to bring finished surfaces within indicated tolerances.
4. Set each paver in a single operation before initial set of mortar; do not return to areas already set or disturb pavers for purposes of realigning finished surfaces or adjusting joints.
5. Provide 3/8 inch nominal joint width with variations not exceeding plus or minus 1/16 inch.

Grouting Joints:

1. Grout joints as soon as possible after initial set of setting bed.
2. Force grout into joints, taking care not to smear grout on adjoining surfaces.
3. Clean pavers as grouting progresses by dry brushing or rubbing with dry burlap to remove smears before tooling joints.
4. Tool exposed joints slightly concave when thumbprint hard, using a jointer larger than joint thickness, unless otherwise indicated.
5. If tooling squeezes grout from joints, remove excess grout and smears by dry brushing or rubbing with dry burlap and tool joints again to produce a uniform appearance.

Curing: Cure grout by maintaining in a damp condition for 7 days, unless otherwise recommended by grout or liquid-latex manufacturer.

CLEANING: After mortar has fully hardened, thoroughly clean exposed masonry surfaces of excess mortar and foreign matter using stiff nylon or bristle brushes and clean water, spray applied at low pressure. Use of acid or alkali cleaning agents is not permitted.

03300 CONCRETE: Refer to Structural Drawings

SCOPE:

A. New concrete stair at front porch
B. New sidewalk to match existing
C. New stair landing pad at back deck

REFERENCE:

Refer to Sheet S-001 for concrete requirements.

06100 CARPENTRY:

SCOPE

A. Wood framing for porch floors, ceiling and roof as indicated in structural drawings
B. Roof sheathing
C. Blocking where needed

REFERENCE:

Refer to S-002 for timber framing requirements.

COORDINATE:

Due to the nature of the project, A clear distinction can not be made between finish carpentry and framing carpentry. The General Contractor shall familiarize himself with the documents taking special notice of where structural framing members constitute an exposed finished part of the work. Framing lumber for those portions of the work shall be hand selected for appearance. Review all drawings including plans, elevations, and reflected ceiling plans to ensure that framing is coordinated with new work.

Exposed surfaces include: visible surfaces of trim, rails, stairs, woodwork, excluding the top surfaces 80" or more above the floor, unless visible from above, and the bottom surfaces 40" or less above the floor unless visible from below.

Concealed surfaces include: non visible surfaces attached to/or covered by another member, and non visible blocking, spacers, etc.

Semi-exposed surfaces include: top horizontal surfaces 80" or more above finish floor unless visible from above, and bottom horizontal surfaces 40" or less above finish floor unless visible from below.

PRODUCTS

LUMBER, GENERAL:

Lumber Standards: Furnish lumber manufactured to comply with PS 20 "American Softwood Lumber Standard" and with applicable grading rules of inspection agencies certified by American Lumber Standards Committee's (ALSC) Board of Review.

Inspection Agencies: Inspection agencies and the abbreviations used to reference them with lumber grades and species include the following:

1. NLGA - National Lumber Grades Authority (Canadian).
2. SPIB - Southern Pine Inspection Bureau.
3. WCLIB - West Coast Lumber Inspection Bureau.
4. WWPA - Western Wood Products Association.

Grade Stamps: Provide lumber with each piece factory-marked with grade stamp of inspection agency evidencing compliance with grading rule requirements and identifying grading agency, grade, species, moisture content at time of surfacing, and mill.

Nominal sizes are indicated, except as shown by detail dimensions. Provide actual sizes as required by PS 20, for moisture content specified for each use.

Provide dressed lumber, S4S, unless otherwise indicated.

Provide seasoned lumber with 15 percent maximum moisture content at time of dressing and shipment for sizes 2 inches or less in nominal thickness, unless otherwise indicated.

MATERIALS

Dimension lumber (2-inches by 4-inches thick): No. 2 Grade Southern Pine, visually graded according to the published grading rules of the Southern Pine Inspection Bureau.

Timbers (5-inches by 2-inches thick and larger): No. 1 Grade Southern Pine, visually graded according to the published grading rules of the Southern Pine Inspection Bureau, dimensions as shown on plans or to match existing. End grain of all timbers shall be coated with paraffin wax or approved sealer at the mill or immediately after treatments, prior to shipping.

Concealed Boards: Where boards will be concealed by other work, provide lumber of 19 percent maximum moisture content (S-DRY or KD-19) and of Southern Pine "No. 2 Boards" per SPIB rules.

1. Board Sizes: Provide and install sizes indicated or, if not indicated (for sheathing, gutter liners, and similar uses), provide 1-inch boards to match existing to be replaced.
2. Furring Strips: Provide 1x2 furring strips @ 16-18" OC at exterior walls to create air space.
3. Provide preservative treated wood in all areas in contact with the roof and/or gutter system.

Blocking and bridging shall be No. 2 Grade Southern Pine, nominal thickness, unless otherwise noted.

Shims shall be taper-sawn western red cedar or approved substitute.

PRESERVATIVE TREATMENT

General: Where lumber or plywood is indicated as treated wood or is specified herein to be treated, comply with applicable requirements of AWPA Standards C2-99 (lumber and timber) and C9 (plywood). Mark each treated item with the AWPB or SPIB Quality Mark Requirements.

Above-Ground Use: Pressure treat wood members for above ground use with Alkaline Copper Quat (ACQ) or Copper Azole (CA) preservatives by vacuum pressure full-cell process to a minimum CCA dry salt retention of 0.25 pcf. For interior uses, after treatment, kiln-dry lumber and plywood to a maximum moisture content, respectively, of 19 percent and 15 percent.

FASTENERS, ADHESIVES, & ACCESSORY MATERIALS

All fasteners in exterior or treated wood shall be hot dip galvanized, stainless steel, or shall have an approved corrosion resistant coating.

A. Galvanized fasteners shall be G185 hot-dip zinc coating per ASTMA153.
B. Stainless steel fasteners shall be AISI Type 304.

Screws: For deck installation, unless otherwise noted, screws shall be self drilling. Where length is not given, the length shall be sufficient to develop the full shear capacity of the screw in the main member.

Bolts, nuts, and washers: ASTM A 307, Grade A, unless otherwise noted. Washers in contact with wood shall be cast iron. Approved manufacturer: Master Bolt Manufacturing, Inc. (888) 905-2658, www.masterbolt.com

Concrete or masonry substrate: galvanized anchor with expansion shank, or threaded concrete screw anchor, length as shown on the plans or as recommended by manufacturer for minimum 1,000 pound pull-out resistance. Approved manufacturers:

A. Tapcon
B. Hilti
C. Powers-Rawl

Connector hardware: approved manufacturers:

A. Cleveland Steel Specialty Co. (Cleveland, Teco)
B. United Steel Products Co. (Kant-Sag - Silver)
C. Simpson Strong-Tie

Construction Adhesive: Polyurethane-based, single component, gun-grade adhesives by OSI Sealants, Inc.

A. Moisture Content 19% or lower, use PL Premium
B. Pressure Treated Wood, use PL-400

STORAGE AND HANDLING

All wood products shall be placed on blocking so that the material does not sag and is completely out of ground-contact.

All wood products shall be protected from rain and direct sunlight.

Materials shall be stored on site no more than 30 days prior to use. Once un-bundled, materials must be installed immediately unless stickered and protected in a manner approved by the Engineer.

EXECUTION

EXAMINATION

Verify all dimensions and existing conditions in the field.

Verify that surfaces are ready to receive work.

Verify mechanical, electrical, and building items affecting work of this Section are ready to receive this work. Notify the engineer of any such items requiring adjustment.

INSTALLATION

Remove existing materials to be replaced.

Accurately measure or scribe members before cutting. Make all cuts clean and true to mating surfaces. All lumber and timber shall be accurately cut and framed to a close fit so that the joints will have even bearing over the entire contact surface. Mortises shall be true to size for their full depth and tenons shall make a snug, but not a driven, fit there-in.

Treat all field-cuts of existing and new treated material with an approved water repellent preservative.

Firestop concealed spaces of wood framed walls, furring, and partitions at each floor level and at the ceiling line of the top story. Use closely-fitted wood blocks of nominal 2-inch thick lumber of the same width as framing members.

Set and secure materials and components in place, plumb, and level.

Discard units of material with defects, which might impair quality of work, and units which are too small to use in fabricating work with minimum joints or optimum joint arrangement.

Set carpentry work accurately to required levels and lines, with members plumb and true and accurately cut and fitted.

Securely attach carpentry work to substrate by anchoring and fastening as shown and as required by recognized standards. Countersink nail heads on exposed carpentry work and fill holes.

Bridging and blocking shall be framed neatly and accurately, and securely toenailed with at least two nails in each end. Bridging or blocking shall be provided as follows:

A. In new work, in rows at midspan and 8-feet on-center, and over supports; and
B. Where shown on the plans or as required to prevent warping or twisting of installed materials.

Connecting hardware shall be installed in accordance with the manufacturer's recommendations.

06200 ORNAMENTAL MILLWORK & FINISH CARPENTRY:

SCOPE:

All exposed exterior standing and running wood trim members, ornamental and miscellaneous millwork that are not structural in nature, to include:

A. Wood caps, pediments and wood thresholds, plinth, corner blocks and other exposed trim.
B. Wood ceiling, soffit or decorative paneling.
C. Porch flooring
D. Turned or boxed porch posts or columns, pilasters, false beams, screens, brackets, corbels, finials and drops.
E. Band sawn, scrolled, turned or carved ornamental millwork.
F. Cornice moldings, verge boards, corner and edge boards, fascia and soffits, wood belt and base courses, water tables and casings.

PERFORMANCE REQUIREMENTS:

Furnish and install new ornamental millwork as shown in the drawings.

Repair and install new finish carpentry as indicated herein and as required to produce a product ready for final finishing which meets at least the minimum requirements specified with respect to surface smoothness and joint tolerances.

SUBMITTALS:

Samples: Submit sample of each item of custom reproduction millwork for architect's written approval. Submit shop drawings for any custom knives required.

A. Porch Posts
B. Roof Brackets
C. Handrail & Balusters
D. Porch Floor
E. Sawn Scrollwork

QUALITY ASSURANCE:

Installer Qualifications: Finish work done "in place" shall be performed by a firm with successful experience in similar work on projects comparable to this project in scope, nature, and complexity. Workmen shall be skilled finish carpenters, and experienced in the type of work required.

PRODUCT DELIVERY, STORAGE AND HANDLING:

Protect ornamental millwork materials during transit, delivery, storage, and handling to prevent damage, soiling and deterioration.

Do not deliver ornamental millwork materials, until wet work, grinding and similar operations which could damage, soil or deteriorate woodwork have been completed in installation areas.

PROJECT/SITE CONDITIONS:

Condition wood materials at the installation area no less than 3 weeks per inch of thickness prior to installation.

PRODUCTS

Lumber products shall be of the species and grade specified, and:

1. Shall conform in finish width, thickness and length of lumber with the appropriate AWI 300-2018 Materials Standard.
2. Shall have no defects, either natural or manufactured exceeding those permitted by AWI 300-2018 Materials Standard, section 3 Softwood Material Rules for the selected species, however: Finger joints are not permitted.
3. Natural and manufacturing defects are permitted, if covered by adjoining members or otherwise concealed when installed. Warp that can be held flat and straight with normal attachment is permitted.
4. Lumber species for exterior ornamental millwork shall be either: Idaho White Pine, Northern White Pine, American Mahogany or Douglas Fir. Obtain lumber for ornamental millwork from a single source.

MATERIALS, GENERAL:

Exposed surfaces shall comply with smoothness requirements. Flat wood surfaces require minimum 120 grit sanding. Profiled or shaped wood surfaces require minimum 120 grit sanding. Turned surfaces require minimum 120 grit sanding. Cross sanding, excluding turned surfaces, is not allowed. Tear outs, knife nicks, or hit or miss machining is not permitted. Knife marks are not permitted where sanding is required. Glue or filler, if used shall be inconspicuous and match the adjacent surface for smoothness.

Edge Treatment: Unless otherwise indicated, exposed edges of smooth surfaced trim specified in this section, shall be slightly eased. Cut sawn edges are permitted at scrollwork. Turnings shall be clean, cut, sanded and well matched for alignment.

Kerf backs of wide flat members, except for member ends exposed in finish work. Exterior standing and running trim 5-1/4" and wider shall require kerfing, 1/8" wide by 1/4" deep, a maximum of 1-1/2" on center.

Nominal sizes are indicated, except as shown by detailed dimensions. Provide dressed or worked and dressed lumber, as applicable, manufactured to actual sizes and pattern as shown, unless otherwise indicated.

Moisture Content of Lumber: Provide kiln-dried (KD) lumber having a moisture content from time of manufacture until time of installation not greater than values required by the applicable grading rules of the respective grading and inspecting agency for the species and product indicated.

Inspect each piece of lumber and plywood or each unit of finish carpentry after drying; do not use twisted, warped, bowed or otherwise damaged or defective wood.

Exterior ornamental millwork shall be neatly and accurately installed, mechanically fastened with nails or screws, with fasteners located in molding quirks or reliefs where possible, otherwise countersunk. Glue where required shall be a type 1 fully waterproof glue suitable for exterior use with adhesive residue removed from exposed and semi-exposed surfaces.

Scribe and cut work to fit adjoining work, and refinish cut surfaces or repair damaged finish at cuts.

Standing and Running Trim: Install with minimum number of joints possible, using full-length pieces (from maximum length of lumber available). Stagger joints in adjacent and related members. Cope at returns, miter at corners, to produce tight fitting joints with full surface contact throughout length of joint. Use scarf joints for end-to-end joints.

Anchor finish carpentry work to anchorage devices or wood blocking built-in or directly attached to substrates. Secure to grounds, stripping and blocking with countersunk, concealed fasteners and blind nailing as required for a complete installation. Use fine finishing nails for exposed nailing, countersink and filled flush with finished surface. Woodwork shall be securely fastened and tightly fitted with flush joints, and: installed plumb, level, square and flat within 1/8" in 96". Woodwork shall be installed free of warp, cupping, twisting and/or bowing that cannot be held true. Woodwork shall be free of open joints, visible machine marks, nicks, chips, tear-outs, cross-sanding, and/or scratches.

STAIRWORK: Glue up is permitted of handrails, guardrails, newel posts and balusters. Treads at open string stairs shall have a mitered return nosing, doweled or biscuit spline joined. Risers shall be rabbeted to receive the back edge of the tread and shall be mitered at open string. Rails to receive balusters with square heads shall be plowed on underside and provided with a fillet. Rails to be installed without splices, and joints to avoid partial cuts.

CLEANING AND PROTECTION:

Finishing: Before finishing, all exposed portions of woodwork shall have handling marks or effects of exposure to moisture removed with a thorough, final sanding over all surfaces of the exposed portions, using appropriate grit sandpaper, and shall be cleaned before applying sealer or finish.

O'Connell
ARCHITECTURE
3908 Avenue B, #309
Austin, Texas 78751
512|751-1374

NOT FOR CONSTRUCTION
TERESA O'CONNELL
#15432

GERMAN FREE SCHOOL
507 E. 10th Street, Austin Texas 78701

ISSUE DATE
95% CONSTRUCTION DOCS
July 31, 2022

SHEET NAME
SPECIFICATIONS

SHEET NUMBER
A-901

Concealed surfaces of all architectural woodwork that might be exposed to moisture, such as those adjacent to exterior masonry walls, shall be primed. Exterior standing and running trim shall be back-primed before installation. Cut ends shall be primed before installation.

Protection: Installer of finish carpentry work shall advise Contractor of final protection and maintained conditions necessary to ensure that work will be without damage or deterioration at time of acceptance.

07500 FLAT SEAM METAL ROOFING

Related Requirements:

Section 076215 - Flashing and Trim: Flashing and other trim not part of roofing.

Section 076220 - Gutters and Downspouts: Gutters and downspouts associated with roofing.

COORDINATION

Coordinate metal roofing with rain drainage work, flashing, gutters, downspouts, trim and construction of decks, parapets, walls, and other adjoining work to provide permanently watertight, secure, and noncorrosive installation.

SUBMITTALS

General: Submit the following: Product data including metal manufacturer's specifications, installation instructions, and general recommendations for roofing applications. Shop drawings showing manner of forming, joining, and securing metal roofing, and pattern of seams. Show expansion joint details and waterproof connections to adjoining work and at obstructions and penetrations.

WARRANTY

Warrant installed system and components to be free from defects in material and workmanship for period of 2 years.

MATERIALS

Terne Coated Stainless Steel Roofing Sheets: 439 Stainless Steel with 100% tin coating alloy electroplated to surface.

i. Pans: 25 ga, 18" x 28"

ii. Solder: tin/lead alloy containing not more than .5% antimony, as approved by roofing manufacturer.

iii. Flux: as approved by roofing manufacturer.

High Temperature Grade Water Barrier Underlayment: Cold applied, self-adhering membrane composed of a high density, cross laminated polyethylene film coated on one side with a layer of butyl rubber or high temperature asphalt adhesive. Provide primer when recommended by water barrier manufacturer.

Acceptable Products:

A. Blueskin PE 200 HT, Henry.

B. Ultra, W.R. Grace Company.

C. CCW MiraDRI WIP 300 High Temperature, Carlisle Coatings and Waterproofing.

Fasteners: TCSS: Stainless Steel roofing nails, ¾" length

Paper Slip Sheet: Minimum 4-lb. red rosin-sized building paper.

FABRICATION

General Metal Fabrication: Shop-fabricate work to greatest extent possible. Comply with details shown and with applicable requirements of the Architectural Sheet Metal Manual, SMACNA, 7th Edition, 2012. Fabricate for waterproof and weather-resistant performance with expansion provisions for running work, sufficient to permanently prevent leakage, damage, or deterioration of the work. Form work to fit substrate. Comply with material manufacturer's instructions and recommendations for forming material. Form exposed metal work without excessive oil-canning, buckling, and tool marks, true to line and levels indicated, with exposed edges folded back to form hems.

Fabricate to allow for adjustments in field for proper anchoring and joining.

Form sections true to shape, accurate in size, square, free from distortion and defects.

Cleats: Fabricate cleats and starter strips of same material as sheet, interlockable with sheet.

INSTALLATION:

Design wind loads were based upon the requirements of ASCE 7-10

1. Wind Speed: 120 MPH
2. Risk Category: II
3. Exposure Category: B

Anchor blocking and plywood to cornice assembly only through existing mortar joints.

A. Anchor blocking to masonry mortar joints with specified 410 Stainless Steel Tapcon Anchors. Countersink heads in blocking.

B. Anchor plywood to blocking with 1 5/8" (Type W) screws spaced at 7" OC.

Sheathing must be clean, smooth, dry and must remain dry after application.

Install Self Adhering Underlayment

A. Install 6" band of SEU centered at joint between parapet wall and plywood deck.

B. Install primary underlayment up wall to new reglet, over span of cornice, and down face of cornice edge to cover joint between wood blocking/deck and stone

C. Install with minimum side laps of 3.5" and endlaps of 6". Hand roll all membrane edges and overlaps with a 2" steel roller. Do not leave exposed longer than time recommended by manufacturer.

Install rosin-sized paper if roofing finish changes to copper

Pre-tin all joints 1 ½" back from all edges if finish changes to copper. Follow manufacturer's recommendation for pre-tinning TCSS.

Install new metal roof cap per details, including counterflashings, flat seam roofing, drip edge wrap, and all cleats.

SHEET METAL INSTALLATION:

1. Unless otherwise specifically permitted by Preservation Architect, turn all exposed edges back 3/4". Form bends to 1/16" inside radius.
2. Shield all sheet metal against galvanic action with adhesive sealer tape.
3. Join parts with soldered rivets where necessary for strength or stiffness. Provide watertight expansion joints where indicated on Drawings.
4. Whenever possible, secure metal by means of clips or cleats without nailing through metal.
5. Flat Lock Seam Roofs: Edges of sheets shall be locked and soldered together and shall by heavily pre-tinned with solder on both sides at least 1-1/2" back.
6. Two adjacent edges of each rectangular sheet shall be folded over (form pans on press brake) the top of the sheet 3/4 inch and the edges on the other two adjacent sides shall be folded underneath 3/4". Place sheet and engage 2 inch cleats in each of the "over" folds; nail cleats to wood deck and bend the end of cleat over the nail heads. The next sheet shall be placed by engaging one of its edges which has been folded under with upturned cleated edge of the preceding sheet. This process shall be continued until surface is covered.
7. All seams shall be malleted and thoroughly sweated full with solder.
8. Soldering: Thoroughly clean and tin all joint materials before soldering. Perform all soldering slowly with well heated soldering copper to heat seams thoroughly and completely fill with solder.
9. Perform all soldering with heavy soldering copper (3 lb. minimum each) of blunt design, properly tinned for use. Make all exposed soldering on finished surfaces neat, full flowing, and smooth.
10. Form soldered joints by applying flux to surface and lifting overlapping sheet to apply between sheets to minimum 1/2" depth. Thoroughly sweat joint drawing solder between sheets to minimum 1/2" depth and apply uniform surface bead without excess build up.
11. Do not nail metal components directly to substrate or solder over nail heads. Where metal components are indicated to be joined prior to soldering, flat lock the pieces of metal together and secure to substrate with cleats.
12. Cut, notch, miter, and provide tabs as necessary to properly join and interlock individual components for soldering. Spot braze units to be soldered except where riveting is permitted or indicated. When riveting in the field, take care not to penetrate substrate waterproofing.
13. Immediately neutralize flux using cloth saturated with 10% solution of washing soda and water, rinse with clean water, and wipe again using separate cloth.
14. Seams: Fabricate non-moving seams in sheet metal with flat-lock seams. Pre-tin edges to be seamed, form seams, and solder. Make all lock and lap seams, where soldered, at least 3/4" wide. Where lap seams are not soldered, lap according to pitch but in no case less than 4 inches and hem exposed view edge 1/2". Make all flat and lap seams in direction of flow. Join parts with rivets or sheet metal screws where necessary for strength or stiffness and cover heads with 2" diameter metal discs fully soldered.

Install expansion joint every 30' along cap as approved through Shop Drawings.

CLEANING:

A. Upon completion of each area of soldering, carefully remove flux and other residue from surfaces. Neutralize acid flux by washing with baking soda solution, and then flushing clear water rinse. Use special care to neutralize and clean crevices.

B. Clean exposed metal surfaces of substances that would interfere with uniform oxidation and weathering.

PROTECTION:

Provide final protection in a manner acceptable to installer that ensures that metal roofing is without damage or deterioration at time of Substantial Completion.

07900 JOINT SEALERS:

SCOPE:

Seal all open joints in work area.

SUBMITTALS:

Product data if other than specified materials

Sealant color samples

PERFORMANCE: Joint sealers are required to establish and maintain airtight and waterproof continuous seal on a permanent basis, within recognized limitations of wear and aging as indicated for each application. All sealants must be professionally installed, sound and tight at project completion.

MATERIALS:

Type 1: Single-Component High Performance Polyurethane Sealant: Exterior use

1. Additional Movement Capability: +/-35 movement in expansion and contraction.
2. Joint Substrates: Concrete, brick, wood, expansion wall joints, precast units, perimeter window caulking.
3. Available Products: Subject to compliance with requirements, elastomeric sealants that may be incorporated in the Work include, but are not limited to, the following:
   a. MasterSeal NP-1, BASF Corporation or approved equal

Type 2: Multi-Component Self Leveling and Slope Grade Sealant: Type M, Grade P, Class 25, Uses T and M as applicable to joint substrates indicated:

1. Additional Movement Capability: +/-25 movement in expansion and contraction.
2. Joint Substrates: Cast-in-place concrete, sidewalks
3. Available Products: Subject to compliance with requirements, elastomeric sealants that may be incorporated in the Work include, but are not limited to, the following:
   a. MasterSeal SL-2, BASF Corporation
   b. THC/900/901, Tremco, Inc.

Sealant Backer Rod: As recommended by sealant manufacturer for back up and compatibility with sealant.

EXECUTION

INSPECTION:

Installer must examine substrates, joint surfaces and conditions under which joint sealer work is to be performed, and must notify Contractor in writing of unsatisfactory conditions. Do not proceed with joint sealer work until unsatisfactory conditions have been corrected in a manner acceptable to Installer.

JOINT PREPARATION:

Clean joint surfaces immediately before installation of gaskets, sealants or caulking compounds. Remove dirt, insecure coatings, moisture and other substances which could interfere with seal of gasket and bond of sealant or caulking compound.

Concrete: Etch concrete and masonry joint surfaces as recommended by sealant manufacturer.

Metal: Roughen metal and wipe with xylene solvent as recommended by sealant manufacturer.

Prime or seal joint surfaces where indicated, and where recommended by sealant manufacturer. Confine primer/sealant to areas of sealant bond; do not allow spillage or migration onto adjoining surfaces.

INSTALLATION:

Comply with manufacturer's printed instructions except where more stringent requirements are shown or specified, and except where manufacturer's technical representative directs otherwise.

Set joint filler units at depth or position in joint as indicated to coordinate with other work, including installation of bond breakers, backer rods and sealants. Do not leave voids or gaps between ends of joint filler units.

Install bond breaker tape where required by manufacturer's recommendations to ensure that sealants will perform as intended.

Employ only proven installation techniques which will ensure that sealants are deposited in uniform, continuous ribbons without gaps or air pockets, with complete "wetting" of joint bond surfaces equally on opposite sides. Except as otherwise indicated, fill sealant rabbet to a slightly concave surface, slightly below adjoining surfaces. Where horizontal joints are between a horizontal surface and vertical surface, fill joint to form a slight cove, so that joint will not trap moisture and dirt.

Spillage: Do not allow sealants or compounds to overflow from confines of joints, or to spill onto adjoining work, or to migrate into voids of exposed finishes. Clean adjoining surfaces by whatever means may be necessary to eliminate evidence of spillage.

CLEANING:

Clean off excess sealants or sealant smears adjacent to joints as work progresses by methods and with cleaning materials approved by manufacturers of joint sealants and of products in which joints occur.

CURE AND PROTECTION:

Cure sealants and caulking compounds in compliance with manufacturer's instructions and recommendations, to obtain high early bond strength, internal cohesive strength and surface durability. Advise Contractor of procedures required for cure and protection of joint sealers during construction period, so that they will be without deterioration or damage (other than normal wear and weathering) at time of substantial completion. Cure and protect sealants in a manner which will minimize increases in modulus of elasticity and other accelerated aging effects. Replace or restore sealants which are damaged or deteriorated during construction period.

09900 PAINTING & FINISHING:

SCOPE:

Prime and paint all exterior painted surfaces including posts, trim, railings, stairs, ceilings, and floors.

SINGLE SOURCE RESPONSIBILITY: Provide primers and other undercoat paint produced by same manufacturer as finish coats. Use only thinners recommended by manufacturers and in amounts indicated. Use products from one of the following manufacturers or approved equal:

- Benjamin Moore
- Sherwin Williams

JOB CONDITIONS shall be as recommended by paint manufacturer for each application.

COORDINATION OF WORK:

Review other sections in which primers are provided to ensure compatibility of the total systems for various substrates. On request, furnish information on characteristics of finish material to ensure use of compatible primers.

DELIVERY, STORAGE AND HANDLING:

Deliver materials to the job site in the manufacturer's original, unopened packages and containers bearing manufacturer's name and label.

Store materials not in use in tightly covered containers in a well-ventilated area at a minimum ambient temperature of 45º F. Maintain containers used in storage in a clean condition, free of foreign materials and residue.

Keep storage area neat and orderly.

SUBMITTALS:

Product Data for all paint systems specified.

Warranty Information

Field Samples: On wall surfaces and other exterior and interior components which have been cleaned and finish removal/preparation accomplished and approved, duplicate finishes of prepared samples. Provide full-coat finish samples on at least 100 sq. ft. of surface until required sheen, color, and texture are obtained; simulate finished lighting conditions for review of in-place work.

MATERIALS:

Provide best quality grade of various types of coatings as regularly manufactured by acceptable materials manufacturers. Materials not displaying manufacturer's identification as a standard, best grade product will not be acceptable.

Proprietary names used to designate colors or materials are not intended to imply that products of named manufacturers are required to exclusion of equivalent products of other manufacturers. Furnish the manufacturer's material data and certificates of performance for proposed substitutions.

COMPATIBILITY:

Paint Coordination: Provide finish coats which are compatible with prime paints used. Review other sections of these specifications in which prime paints are to be provided to ensure compatibility of total coating system for various substrates. Upon request from other trades, furnish information on characteristics of finish materials proposed for use, to ensure compatible prime coats are used. Provide barrier coats over incompatible primers or remove and reprime as required. Notify Architect in writing of any anticipated problems using specified coating systems with substrates primed by others.

EXECUTION:

GENERAL:

Remove hardware and hardware accessories, plates, machined surfaces, lighting fixtures, and similar items already installed that are not to be painted, or provide surface-applied protection prior to surface preparation and painting. Remove these items, if necessary, to completely paint the items and adjacent surfaces. Following completion of painting operations in each space or area, have items reinstalled by workers skilled in the trades involved.

CLEANING:

Before applying paint or other surface treatments, clean the substrates of substances that could impair the bond of the various coatings. Remove oil and grease prior to cleaning. Schedule cleaning and painting so dust and other contaminants from the cleaning process will not fall on wet, newly painted surfaces.

SURFACE PREPARATION:

Perform preparation and cleaning procedures in accordance with paint manufacturer's instructions for each particular substrate condition. Upon delivery; immediately prime all edges, ends, faces, undersides, and back of wood to be field painted.

APPLICATION:

Apply paint, sealers, stains, and all other coatings in accordance with manufacturer's directions. Use applicators and techniques best suited for substrate and type of material being applied. Apply successive coats until coating film is of uniform finish, color and appearance. Give special attention to insure that all edges, corners and profiles receive dry film thickness equivalent to that of flat surfaces. Sand lightly between each succeeding coat. Comply with paint manufacturer's published specifications for surface preparation, environmental conditions, paint application, and curing. All materials shall be applied under adequate illumination, evenly spread and smoothly flowed on without runs or sags. Cloudiness, spotting, holidays, laps, brush marks, color irregularity, orange peel, nail holes or other surface imperfections will not be acceptable.

Primers: Provide the manufacturer's recommended factory-formulated primers that are compatible with the substrate and finish coats indicated. Tint primers as necessary to maximize hiding properties of paint system.

Finish Coats: Provide 2 coats on each surface of the manufacturer's recommended factory-formulated finish-coat materials that are compatible with the substrate and undercoats indicated.

Total Dry Film Thickness: Provide total dry film thickness (DFT) not less than manufacturer's recommended thickness for each product specified.

CLEANING:

Cleanup: At the end of each work day, remove empty cans, rags, rubbish, and other discarded paint materials from the site.

After completing painting, clean glass and paint-spattered surfaces. Remove spattered paint by washing and scraping. Be careful not to scratch or damage adjacent finished surfaces.

PROTECTION:

Protect work of other trades, whether being painted or not, against damage by painting. Correct damage by cleaning, repairing or replacing, and repainting, as acceptable to Architect.

O'Connell
ARCHITECTURE
3908 Avenue B, #309
Austin, Texas 78751
512|751-1374

NOT FOR CONSTRUCTION
TERESA O'CONNELL
#15432

GERMAN FREE SCHOOL
507 E. 10th Street, Austin Texas 78701

ISSUE DATE
95% CONSTRUCTION DOCS
July 31, 2022

SHEET NAME
SPECIFICATIONS

SHEET NUMBER
A-902

COORDINATION

A. THE CONTRACTOR SHALL COMPARE THE ARCHITECTURAL, STRUCTURAL, MECHANICAL, ELECTRICAL, PLUMBING, AND OTHER SERIES DRAWINGS AND REPORT ANY DISCREPANCIES BETWEEN EACH SET OF DRAWINGS AND WITHIN EACH SET OF DRAWINGS PRIOR TO FABRICATION AND INSTALLATION OF ANY STRUCTURAL MEMBERS.

B. ONLY LARGER SLEEVE OPENINGS AND FRAMED OPENINGS IN STRUCTURAL FRAMING COMPONENT MEMBERS ARE INDICATED ON THE STRUCTURAL DRAWINGS. HOWEVER, ALL SLEEVES, INSERTS AND OPENINGS, INCLUDING FRAMES AND/OR SLEEVES SHALL BE PROVIDED FOR PASSAGE, PROVISION AND/OR INCORPORATION OF THE WORK OF THE CONTRACT, INCLUDING BUT NOT LIMITED TO MECHANICAL, ELECTRICAL AND PLUMBING WORK. THIS WORK SHALL INCLUDE THE COORDINATION OF SIZES, ALIGNMENT, DIMENSIONS, POSITION, LOCATIONS, ELEVATIONS AND GRADES AS REQUIRED TO SERVE THE INTENDED PURPOSE. OPENINGS NOT INDICATED ON THE STRUCTURAL DRAWINGS, BUT REQUIRED AS NOTED ABOVE, SHALL BE SUBMITTED TO THE ENGINEER FOR REVIEW.

C. REFER TO ARCHITECTURAL, MECHANICAL, ELECTRICAL AND PLUMBING DRAWINGS FOR FLOOR ELEVATIONS, SLOPES, DRAINS AND LOCATION OF DEPRESSED AND ELEVATED FLOOR AREAS.

D. COMPATIBILITY OF THE STRUCTURE AND PROVISIONS FOR BUILDING EQUIPMENT SUPPORTED ON OR FROM STRUCTURAL COMPONENTS SHALL BE VERIFIED AS TO SIZE, DIMENSIONS, CLEARANCES, ACCESSIBILITY, WEIGHTS AND REACTION WITH THE EQUIPMENT FOR WHICH THE STRUCTURE HAS BEEN DESIGNED PRIOR TO SUBMISSION OF SHOP DRAWINGS AND DATA FOR EACH PIECE OF EQUIPMENT AND FOR STRUCTURAL COMPONENTS. DIFFERENCES SHALL BE NOTED ON THE SUBMITTALS.

E. SHOP DRAWINGS SHALL BE PREPARED FOR ALL STRUCTURAL ITEMS AND SUBMITTED FOR REVIEW BY THE ENGINEER. STRUCTURAL DRAWINGS SHALL NOT BE REPRODUCED AND USED AS SHOP DRAWINGS. ALL ITEMS DEVIATING FROM THE STRUCTURAL DRAWINGS OR FROM PREVIOUSLY SUBMITTED SHOP DRAWINGS SHALL BE CLOUDED.

F. THE DETAILS DESIGNATED AS "TYPICAL DETAILS" APPLY GENERALLY TO THE STRUCTURAL DRAWINGS IN ALL AREAS WHERE CONDITIONS ARE SIMILAR TO THOSE DESCRIBED IN THE DETAILS.

G. WHERE EXISTING CONCRETE IS TO BE DRILLED, CORED, OR CUT, THE GENERAL CONTRACTOR SHALL LOCATE, BY NON-DESTRUCTIVE MEANS SUCH AS SCANNING, ALL EXISTING MILD AND PT REINFORCING STEEL IN THE EXISTING CONCRETE PRIOR TO THE DRILLING, CORING, OR CUTTING. THE GENERAL CONTRACTOR IS RESPONSIBLE TO ENSURE THAT NO MILD OR PT REINFORCING STEEL IS DAMAGED OR COMPROMISED.

H. ALL DIMENSIONS AND CONDITIONS OF EXISTING CONSTRUCTION SHALL BE VERIFIED AT THE JOB SITE PRIOR TO THE PREPARATION OF SHOP DRAWINGS. DIFFERENCES BETWEEN EXISTING CONSTRUCTION AND THAT SHOWN ON THE STRUCTURAL DRAWINGS SHALL BE REFERRED TO THE ARCHITECT. DIFFERENCES SHALL ALSO BE CLOUDED ON THE SHOP DRAWINGS. CUTTING OR CORING OF ANY STRUCTURAL CONCRETE OR STEEL ELEMENTS SHALL BE COORDINATED WITH THE ENGINEER.

I. ALL STRUCTURAL ELEMENTS OF THE PROJECT HAVE BEEN DESIGNED BY THE ENGINEER TO RESIST THE REQUIRED CODE VERTICAL AND LATERAL FORCES THAT COULD OCCUR IN THE FINAL COMPLETED STRUCTURE ONLY. IT IS THE RESPONSIBILITY OF THE CONTRACTOR TO PROVIDE ALL REQUIRED BRACING DURING CONSTRUCTION TO MAINTAIN THE STABILITY AND SAFETY OF ALL STRUCTURAL ELEMENTS DURING THE CONSTRUCTION PROCESS UNTIL THE LATERAL-LOAD RESISTING OR STABILITY-PROVIDING SYSTEM IS COMPLETELY INSTALLED AND THE STRUCTURE IS COMPLETELY TIED TOGETHER. TEMPORARY SUPPORTS SHALL NOT RESULT IN THE OVERSTRESS OR DAMAGE OF THE ELEMENTS TO BE BRACED NOR ANY ELEMENTS USED AS BRACE SUPPORTS.

J. THE CONTRACT STRUCTURAL DRAWINGS AND SPECIFICATIONS REPRESENT THE FINISHED STRUCTURE, AND EXCEPT WHERE SPECIFICALLY SHOWN, DO NOT INDICATE THE MEANS OR METHODS OF CONSTRUCTION. THE CONTRACTOR AND THEIR SUB-CONTRACTORS SHALL SUPERVISE AND DIRECT THE WORK AND SHALL BE SOLELY RESPONSIBLE FOR ALL CONSTRUCTION MEANS, METHODS, PROCEDURES, TECHNIQUES, SEQUENCES AND SAFETY MEASURES INCLUDING, BUT NOT LIMITED TO, ADHERENCES TO ALL OSHA GUIDELINES. THE ENGINEER SHALL NOT HAVE CONTROL OF, AND SHALL NOT BE RESPONSIBLE FOR, CONSTRUCTION MEANS, METHODS, TECHNIQUES, SEQUENCES OR PROCEDURES, FOR SAFETY PRECAUTIONS AND PROGRAMS IN CONNECTION WITH THE WORK, FOR THE ACTS OR OMISSIONS OF THE CONTRACTOR, SUBCONTRACTORS, OR ANY OTHER PERSON PERFORMING ANY OF THE WORK, OR FOR THE FAILURE OF ANY OF THESE PERSONS TO CARRY OUT THE WORK IN ACCORDANCE WITH THE STRUCTURAL CONTRACT DOCUMENTS.

K. WHERE CONFLICT EXISTS AMONG THE VARIOUS PARTS OF THE STRUCTURAL CONTRACT DOCUMENTS, STRUCTURAL DRAWINGS, GENERAL NOTES, AND SPECIFICATIONS, THE STRICTEST REQUIREMENTS, AS INDICATED BY THE ENGINEER, SHALL GOVERN.

L. PERIODIC SITE OBSERVATION BY FIELD REPRESENTATIVES OF TSEN ENGINEERING IS SOLELY FOR THE PURPOSE OF DETERMINING IF THE WORK IS PROCEEDING IN ACCORDANCE WITH THE STRUCTURAL CONTRACT DOCUMENTS. THIS LIMITED SITE OBSERVATION IS NOT INTENDED TO BE A CHECK OF THE QUALITY OR QUANTITY OF THE WORK, BUT RATHER A PERIODIC CHECK IN AN EFFORT TO INFORM THE OWNER AGAINST DEFECTS AND DEFICIENCIES IN THE WORK OF THE CONTRACTOR.

SUBSTITUTIONS

A. ALL REQUESTS FOR SUBSTITUTIONS OF MATERIALS OR DETAILS SHOWN IN THE STRUCTURAL CONTRACT DOCUMENTS SHALL BE SUBMITTED FOR APPROVAL DURING THE BIDDING PERIOD.

B. ONCE BIDS ARE ACCEPTED, PROPOSED SUBSTITUTIONS WILL BE CONSIDERED ONLY WHEN THEY ARE OFFICIALLY SUBMITTED WITH AN IDENTIFIED SAVINGS OR DURATION TO BE DEDUCTED FROM THE CONTRACT AND/OR SCHEDULE IMPACT. A STATEMENT THAT THE GC WILL ASSUME ANY UNIDENTIFIED COST IMPACT RELATED TO THE SUBSTITUTION SHALL ALSO BE PROVIDED. SUBMITTALS NOT SATISFYING THE ABOVE CRITERIA WILL NOT BE CONSIDERED.

CODES & REFERENCED REPORTS

A. THE GENERAL BUILDING CODE(S) USED AS THE BASIS FOR THE STRUCTURAL DESIGN ARE AS FOLLOWS:
   1. INTERNATIONAL BUILDING CODE, 2021 EDITION
   2. INTERNATIONAL EXISTING BUILDING CODE, 2021 EDITION

B. STRUCTURAL CONCRETE: BUILDING CODE REQUIREMENTS FOR REINFORCED CONCRETE, AMERICAN CONCRETE INSTITUTE, ACI 318, AS REFERENCED BY THE GENERAL BUILDING CODE.

C. WOOD FRAMING: NATIONAL DESIGN SPECIFICATIONS FOR WOOD CONSTRUCTION WITH SUPPLEMENT, NATIONAL FOREST AND PAPER PRODUCTS ASSOCIATION, AS REFERENCED BY THE GENERAL BUILDING CODE.

D. STRUCTURAL PLYWOOD: PLYWOOD DESIGN SPECIFICATION, AMERICAN PLYWOOD ASSOCIATION, AS REFERENCED BY THE GENERAL BUILDING CODE.

E. FOUNDATION ELEMENTS HAVE BEEN DESIGNED IN ACCORDANCE WITH SOILS INFORMATION PER IBC 2021 TABLE 1806.2 (PRESUMPTIVE LOAD-BEARING VALUES), IBC...

DESIGN LOADS

A. DEAD LOADS INCLUDE THE SELF-WEIGHT OF THE STRUCTURAL ELEMENTS AND PERMANENT SUPERIMPOSED LOADS. PERMANENT SUPERIMPOSED LOADS INCLUDE TH...

1.	CEILING AND MECHANICAL AT ROOF	10 PSF
2.	CEILING AND MECHANICAL AT FLOORS	10 PSF
3.	ROOF (ARCHITECTURAL ROOF SYSTEM AND ROOF INSULATION)	8 PSF

B. LIVE LOADS INCLUDE THE FOLLOWING UNIFORMLY DISTRIBUTED LOADS OR CONCENTRATED LOADS, WHICHEVER PRODUCES THE GREATER LOAD EFFECTS.

	OCCUPANCY OR USE	UNIFORM (psf)	CONCENTRATED (lbs.)
1.	BALCONIES	100	N/A
2.	ROOF -	20	N/A

C. SNOW LOADS
   1. GROUND SNOW LOAD, Pg — 5 PSF

D. WIND LOADS
   1. WIND LATERAL LOAD ON STRUCTURAL FRAME IS BASED ON ASCE 7-10 USING THE FOLLOWING:
      a. BASIC WIND SPEED (ULTIMATE) — 115 MPH
      b. EXPOSURE — C
      c. RISK CATEGORY — II
   2. COMPONENTS AND CLADDING WIND PRESSURES:

SURFACE	(PSF)	ZONE	AREA At (ft2)
ROOF*	x	INTERIOR	10 OR LESS
	x	EDGES	10 OR LESS
	x	CORNERS	10 OR LESS
	x	INTERIOR	100 OR GREATER
	x	EDGES	100 OR GREATER
	x	CORNERS	100 OR GREATER

- PRESSURES FOR TRIBUTARY AREAS IN BETWEEN THE LISTED VALUES MAY BE LINEARLY INTERPOLATED.
- NEGATIVE VALUE SIGNIFIES PRESSURE ACTING AWAY FROM THE SURFACE (SUCTION).
- EDGE AND CORNER ZONE DISTANCES SHALL BE DETERMINED IN ACCORDANCE WITH REFERENCED STANDARD.
- PRESSURES ON PARAPETS SHALL BE DETERMINED BY COMBINING POSITIVE AND NEGATIVE WALL PRESSURES OR WALL AND ROOF PRESSURES LISTED ABOVE IN ACCORDANCE WITH THE REFERENCED STANDARD.

SUBMITTALS

A. SHOP DRAWINGS SHALL BE PREPARED FOR ALL STRUCTURAL ITEMS AND SUBMITTED FOR REVIEW BY THE ENGINEER. STRUCTURAL DRAWINGS SHALL NOT BE REPRODUCED AND USED AS SHOP DRAWINGS. ALL ITEMS DEVIATING FROM THE STRUCTURAL DRAWINGS OR FROM PREVIOUSLY SUBMITTED SHOP DRAWINGS SHALL BE CLOUDED.

B. CONTRACTOR SHALL REVIEW SHOP DRAWINGS FOR COMPLIANCE WITH THE STRUCTURAL DRAWINGS AND SHALL CERTIFY THAT THEY HAVE DONE SO BY A STAMP NOTING THAT THE DRAWINGS HAVE BEEN "APPROVED" AND WHICH BEARS THE SIGNATURE (OR INITIALS) OF AN AUTHORIZED REPRESENTATIVE OF THE CONTRACTOR AND THE DATE. SUBMITTALS WHICH DO NOT REFLECT THE CONTRACTOR'S APPROVAL, SIGNATURE AND DATE WILL BE RETURNED WITHOUT REVIEW.

C. CONTRACTOR SHALL BE RESPONSIBLE FOR DELAYS CAUSED BY REJECTION OF INADEQUATE SHOP DRAWINGS.

D. WHERE REVIEW AND RETURN OF SHOP DRAWINGS IS REQUIRED OR REQUESTED, THE ENGINEER WILL REVIEW EACH SUBMITTAL AND, WHERE POSSIBLE, RETURN WITHIN TWO (2) WEEKS OF RECEIPT.

E. CORRECTIONS OR COMMENTS ON SHOP DRAWINGS OR MANUFACTURER'S DATA SHEETS DO NOT RELIEVE THE CONTRACTOR FROM COMPLIANCE WITH REQUIREMENTS OF THE PLANS AND SPECIFICATIONS. ENGINEER'S REVIEW IS FOR GENERAL CONFORMANCE WITH THE REQUIREMENTS OF THE STRUCTURAL DRAWINGS. CONTRACTOR IS RESPONSIBLE FOR CONFIRMING AND CORRECTING ALL QUANTITIES AND DIMENSIONS, SELECTING FABRICATION PROCESSES AND TECHNIQUES OF CONSTRUCTION, AND COORDINATING THE WORK WITH THAT OF ALL OTHER CONTRACTORS.

F. REFER TO INDIVIDUAL SECTIONS FOR SPECIFIC SUBMITTAL REQUIREMENTS.

G. CONTRACTOR SHALL PROVIDE SUBMITTALS ELECTRONICALLY TO ARCHITECT. ARCHITECT WILL PROVIDE TO ENGINEER FOR REVIEW AND COMMENT. ENGINEER WILL RETURN REVIEWED SUBMITTAL TO ARCHITECT FOR DISTRIBUTION TO THE ARCHITECT, OWNER, AND CONTRACTOR. CONTRACTOR WILL BE RESPONSIBLE FOR PROVIDING AND DISTRIBUTING ENGINEER'S COMMENTS TO THEIR SUBCONTRACTORS.

BUILDING PAD PREPARATION

A. STRUCTURAL FILL MATERIAL SHOULD MEET THE GRADATION AND PLASTICITY REQUIREMENTS SET FORTH IN TXDOT STANDARD SPECIFICATIONS 2014; ITEM 247, TYPE A, GRADE 3 OR BETTER.

B. PRIOR TO PLACING FILL MATERIAL, REMOVE ALL ORGANIC AND OTHER DELETERIOUS MATERIAL FROM THE EXISTING SUBGRADE. REMOVE EXISTING MATERIAL IN ORDER TO OBTAIN A MINIMUM OF 1'-0" OF STRUCTURAL FILL BELOW THE FOOTINGS. EXPOSED SOILS SHOULD BE PROBED TO DETECT ANY SOFT AREAS PRIOR TO SELECT FILL PLACMENT. IF ANY SOFT POCKETS ARE IDENTIFIED, THE SOFT MATERIALS SHOULD BE REMOVED. IF SOFT POCKETS OR AREAS OF PUMPING SOILS ARE IDENTIFIED, THESE MATERIALS SHOULD BE REMOVED TO EXPOSE FIRM MATERIALS AND THE EXCAVATION REPLACED WITH COMPACTED SELECT FILL.

C. STRUCTURAL FILL SHALL BE PLACED IN 8 INCH LOOSE LIFTS TO FINAL SUBGRADE ELEVATION, WATERED AS REQUIRED AND COMPACTED TO A MINIMUM OF 95 PERCENT OF THE MAXIMUM DRY DENSITY AS DEFINED ASTM D698 AT A MOISTURE CONTENT WITHIN -2 PERCENT OF THE OPTIMUM MOISTURE CONTENT.

CAST-IN-PLACE CONCRETE

A. CLASSES OF CONCRETE
   ALL CONCRETE SHALL CONFORM TO THE REQUIREMENTS AS SPECIFIED IN THE TABLE BELOW, UNLESS NOTED OTHERWISE ON THE STRUCTURAL DRAWINGS:

CONCRETE MIX SCHEDULE:

CONC. CLASS	STRENGTH PSI	AGG. TYPE	AGG. SIZE	SLUMP INCHES	MAX W/C
A	3000	NWT	1-1/2"	5-7	----

   a. "NWT" REFERS TO NORMAL CONCRETE HAVING AIR DRY UNIT WEIGHT OF APPROXIMATELY 145 PCF (ASTM C33 AGGREGATE).
   b. WHERE W/C RATIO IS NOT INDICATED IN THE CONCRETE MIX SCHEDULE, IT SHALL BE AS NECESSARY TO MEET STRENGTH REQUIREMENTS.
   c. WHERE THE W/C RATIO IS SHOWN, IT SHALL BE ADHERED TO REGARDLESS OF STRENGTH REQUIREMENTS.
   d. "STRENGTH" IS REQUIRED COMPRESSIVE CYLINDER STRENGTH AT AN AGE OF 28 DAYS.

MIX USAGE SCHEDULE, AUSTIN, TEXAS:

DESCRIPTION OF USE	CONCRETE CLASS	EXPOSURE CLASSES	AIR CONTENT
FOOTINGS	A	F0/S0/W0/C1	-----

B. A MAXIMUM OF 20% OF THE CEMENTITIOUS MATERIALS USED IN MIX DESIGNS MAY BE REPLACED WITH CLASS F FLY ASH.

C. PROVIDE 4.5 PERCENT PLUS OR MINUS 1 1/2 PERCENT OF ENTRAINED AIR IN CONCRETE PERMANENTLY EXPOSED TO THE WEATHER AND ELSEWHERE AT THE CONTRACTOR'S OPTION.

D. EMBEDDED CONDUITS, PIPES, AND SLEEVES SHALL MEET THE REQUIREMENTS OF ACI 318, SECTION 6.3, INCLUDING THE FOLLOWING:
   1. CONDUITS AND PIPES EMBEDDED WITHIN A SLAB, WALL, OR BEAM (OTHER THAN THOSE PASSING THROUGH) SHALL NOT BE LARGER IN OUTSIDE DIMENSION THAN 1/3 THE OVERALL THICKNESS OF THE SLAB, WALL OR BEAM IN WHICH THEY ARE EMBEDDED.
   2. CONDUITS, PIPES AND SLEEVES SHALL NOT BE SPACED CLOSER THAN THREE DIAMETERS OR WIDTHS ON CENTER.

E. SUBMITTAL: SUBMIT PROPOSED MIX DESIGNS IN ACCORDANCE WITH ACI 318, CHAPTER 5. EACH PROPOSED MIX DESIGN SHALL BE ACCOMPANIED BY A RECORD OF PAST PERFORMANCE BASED ON AT LEAST 30 CONSECUTIVE STRENGTH TESTS, OR BY THREE LABORATORY TRIAL MIXTURES WITH CONFIRMATION TESTS.

F. CONCRETE SAMPLING FOR QUALITY ASSURANCE: CONCRETE THAT IS PUMPED SHALL BE SAMPLED AT THE POINT OF DISCHARGE FROM THE TRUCK FOR INFORMATION, INCLUDING SLUMP; AND SHALL BE SAMPLED AT THE POINT OF PLACEMENT FOR ACCEPTANCE OF SLUMP AND AIR CONTENT.

CONCRETE REINFORCING

A. CONCRETE REINFORCEMENT FOR THE PROJECT SHALL CONFORM TO THE FOLLOWING:
   1. ALL REINFORCING STEEL SHALL BE NEW BILLET STEEL IN ACCORDANCE ASTM A615, GRADE 60, UNLESS NOTED OTHERWISE IN THE STRUCTURAL DRAWINGS OR THESE NOTES.

B. DETAILING OF REINFORCING STEEL SHALL CONFORM TO THE AMERICAN CONCRETE INSTITUTE 315 DETAILING MANUAL AND ALL HOOKS AND BENDS IN REINFORCING BARS SHALL CONFORM TO ACI DETAILING STANDARDS, UNLESS NOTED OTHERWISE ON THE STRUCTURAL DRAWINGS.

C. IN UNSCHEDULED GRADE BEAMS, WALLS, AND SLABS, DETAIL REINFORCING AS FOLLOWS:
   1. CLASS A LAP BEAM TOP REINFORCING BARS AT MID SPAN.
   2. CLASS A LAP BEAM BOTTOM REINFORCING BARS AT THE SUPPORTS.
   3. PROVIDE CLASS B LAP AT OTHER LOCATION PENDING ENGINEER'S APPROVAL.
   4. PROVIDE STANDARD HOOKS IN TOP BARS AT CANTILEVER AND DISCONTINUOUS ENDS OF BEAMS, WALLS AND SLABS.
   5. PROVIDE CORNER BARS FOR ALL HORIZONTAL BARS AT THE INSIDE AND OUTSIDE FACES OF INTERSECTING BEAMS OR WALLS. CORNER BARS ARE NOT REQUIRED IF HORIZONTAL BARS ARE HOOKED.
   6. PROVIDE 2-#4 DIAGONAL BARS AT ALL SLAB RE-ENTRANT CORNERS PLACED UNDER THE TOP MAT OF STEEL.

D. WELDING OF REINFORCING STEEL WILL NOT BE PERMITTED UNLESS SPECIFICALLY SHOWN ON THE STRUCTURAL DRAWINGS.

E. HEAT SHALL NOT BE USED IN THE FABRICATION OR INSTALLATION OF REINFORCEMENT.

F. REINFORCING STEEL CLEAR COVER SHALL BE AS FOLLOWS:
   1. FOOTINGS — 3"

G. SUBMITTAL: SUBMIT SHOP DRAWINGS FOR FABRICATION, BENDING, AND PLACEMENT OF CONCRETE REINFORCEMENT. COMPLY WITH ACI 315 "DETAILS AND DETAILING OF CONCRETE REINFORCEMENT". DO NOT REPRODUCE THE STRUCTURAL DRAWINGS FOR USE AS SHOP DRAWINGS.

TSEN-ENGINEERING
SHEET LIST

SHEET NO.	SHEET NAME	Sheet Issue Date
S-001	STRUCTURAL NOTES	08/24/2021
S-002	STRUCTURAL NOTES	08/24/2021
S-003	SPECIAL INSPECTION	08/24/2021
S-101	FOUNDATION, FLOOR FRAMING & ROOF FRAMING PLAN	08/24/2021
S-201	STRUCTURAL DETAILS	08/24/2021
S-202	STRUCTURAL DETAILS	08/24/2021

STRUCTURAL LEGEND

EXAMPLE	DESCRIPTION
C1 — CONCRETE COLUMN TYPE MARK	CONCRETE COLUMN
BELL — P36/48 -3'-0" — PIER TYPE MARK — T.O.PIER EL.	CONCRETE PIER
F1 -3'-0" — FOOTING TYPE MARK — T.O.FTG EL.	CONCRETE FOOTING
	WELDED METAL BAR GRATING
	ROOF TOP UNIT (RTU)
	LOAD BEARING MASONRY WALL
	CONCRETE WALL
SEE BRACED WALL LEGEND / NOTES — BWL WSP BWL	BRACED WALL
	WOOD LOAD BEARING WALL
	EXISTING CONSTRUCTION (HALFTONE)

TSEN-ENGINEERING
TPBE Firm F-12778
210 Barton Springs Rd. Ste. 250
Austin, TX 78704
(512) 474 4001
Project # 9210028

INTERIM REVIEW DOCUMENTS
(NOT INTENDED FOR BIDDING, PERMIT OR CONSTRUCTION PURPOSES)
JAMIE BUCHANAN, P.E.
TEXAS REGISTRATION No. 92680
DATE: XX/XX/XXXX

GERMAN FREE SCHOOL
507 E. 10th Street, Austin Texas 78701

PLEASE RECYCLE

ISSUE	DATE

# REVISION	DATE
SEE PROJECT INFORMATION	

PROJECT NO. XXXXX
DATE 08/24/2021

STRUCTURAL NOTES

S-001

POST-INSTALLED ANCHORS AND DOWELS

A. EXPANSION ANCHORS:
1. IN CONCRETE: EXPANSION ANCHORS SHALL HAVE BEEN TESTED AND QUALIFIED IN ACCORDANCE WITH ACI 355.2 AND ICC-ES AC 193. QUALIFYING ANCHORS SHALL BE ONE OF THE FOLLOWING:
   a. KWIK BOLT TZ (ICC-ES ESR-1917), HILTI INC.
   b. STRONG BOLT 2 (ICC-ES ESR-3037), SIMPSON STRONG-TIE CO., INC.

B. ADHESIVE ANCHORS WITH THREADED ROD:
1. IN CRACKED AND UNCRACKED CONCRETE: ADHESIVE ANCHORS SHALL HAVE BEEN TESTED AND QUALIFIED IN ACCORDANCE WITH ACI 355.4 AND ICC-ES AC 308. QUALIFYING ANCHORS SHALL BE ONE OF THE FOLLOWING PRODUCTS:
   a. HILTI HIT-HY 200 SAFE SET SYSTEM WITH HILTI HIT-Z ROD PER ICC ESR-3187
   b. HILTI HIT-HY 200 SAFE SET SYSTEM WITH HILTI HOLLOW DRILL BIT AND VC 150/300 WITH HILTI HAS THREADED ROD PER ICC ESR-3187
   c. HILTI HIT-RE 500V3 SAFE SET SYSTEM WITH HILTI HOLLOW DRILL BIT AND VC 150/300 WITH HILTI HAS THREADED ROD PER ICC ESR-3814
   d. HILTI HIT-RE 500V3 SAFE SET SYSTEM WITH HILTI HIT-RT ROUGHENING TOOL WITH HILTI HAS THREADED ROD PER ICC ESR-3814 FOR DIAMOND CORED...
   e EPOXY: SET-XP (ICC-ES ESR-2508), SIMPSON STRONG-TIE CO., INC.
   b. ACRYLIC: HIT HY-70 (ICC-ES ESR-3342), HILTI, INC.
4. THREADED ANCHOR ROD SHALL BE ONE OF THE FOLLOWING:
   a. HILTI ADHESIVE: "HIT-Z" AISI 1038
   b. SIMPSON ADHESIVE: STEEL MEETING THE REQUIREMENTS OF ASTM A1554, GRADE 36.
   c. ANCHOR ROD SHALL HAVE A CHAMFERED END ON ONE END TO ACCEPT A NUT AND WASHER; IT MAY HAVE A 45-DEGREE CHISEL POINT ON THE OTHER END.
   d. NUTS AND WASHERS SHALL HAVE A PROOF LOAD STRENGTH AT LEAST AS STRONG AS ANCHOR ROD. STAINLESS STEEL NUTS AND WASHERS SHALL BE PROVIDED WITH STAINLESS STEEL RODS.

C. ADHESIVE REBAR DOWELLING
1. ADHESIVE DOWELING SYSTEMS IN CONCRETE SHALL HAVE BEEN TESTED AND QUALIFIED IN ACCORDANCE WITH ACI 355.4 AND ICC-ES AC 308. QUALIFYING ANCHORS SHALL BE ONE OF THE FOLLOWING PRODUCTS:
   a. EPOXY: HIT-RE 500V3 SAFE SET (ICC-ES ESR-3814), HILTI INC.
   b. EPOXY: SET-XP (ICC-ES ESR-2508), SIMPSON STRONG-TIE CO., INC.
   c. ACRYLIC: HIT-HY 200 SAFE SET (ICC-ES ESR-3187), HILTI, INC.

D. ANCHOR AND DOWEL INSTALLATION
1. ANCHORS AND DOWELS OF THE SIZE AND EMBEDMENT SHOWN ON THE DRAWINGS SHALL BE INSTALLED IN ACCORDANCE WITH THE CONTRACT DOCUMENTS, THE MANUFACTURER'S RECOMMENDATIONS, AND THE MANUFACTURER'S CURRENT EVALUATION (ICC-ES OR IAPMO-ES) REPORT FOR THE ANCHOR. IF CONFLICTS EXIST BETWEEN THESE REFERENCED DOCUMENTS, THE MOST STRINGENT REQUIREMENTS SHALL GOVERN.
2. THE CONTRACTOR SHALL LOCATE ALL EXISTING REINFORCING STEEL AND OTHER EMBEDDED ITEMS CONTAINED IN THE CONCRETE USING NON-DESTRUCTIVE METHODS AND SHALL POSITION ANCHOR LOCATIONS TO AVOID CONFLICTS WITH EXISTING EMBEDDED ITEMS. ANCHOR OR DOWEL LOCATIONS CAN BE ADJUSTED BY A MAXIMUM OF 1 1/2" FROM DETAILED LOCATIONS TO AVOID CONFLICTS, BUT SHALL NEITHER CHANGE ARRANGEMENT NOR MOVE CLOSER TO A CONCRETE EDGE.
3. BASED ON FIELD VERIFIED LOCATIONS OF REINFORCING STEEL AND EMBEDDED ITEMS, THE CONTRACTOR SHALL CREATE TEMPLATES FOR EACH ANCHOR GROUP. SUBMIT TEMPLATE DIMENSIONS FOR REVIEW PRIOR TO FABRICATION OF CONNECTION PLATES.
4. HOLES FOR ANCHORS AND DOWELS SHALL BE DRILLED IN A CONTINUOUS OPERATION USING THE DRILL-BIT TYPE AND SIZE RECOMMENDED BY THE ANCHOR MANUFACTURER. HOLES SHALL BE DRILLED PERPENDICULAR TO THE CONCRETE SURFACE AND SHALL NOT BE ENLARGED OR REDIRECTED AT ANY POINT ALONG ITS LENGTH. HOLES SHALL BE DRILLED USING A HAMMER DRILL, CORING SHALL NOT BE ALLOWED, UNLESS NOTED OTHERWISE.
5. OIL FREE COMPRESSED AIR SHALL BE USED TO BLOW OUT THE HOLES; SHOP VACS, SQUEEZE BULBS, ETC. SHALL NOT BE USED. REFER TO MANUFACTURER'S INFORMATION FOR DETAILED CLEANING INSTRUCTIONS.
   a. HILTI SAFE-SET SYSTEM MAY BE USED TO ELIMINATE HOLE CLEANING WITH ADHESIVE ANCHORS.
6. ALL ABANDONED HOLES SHALL BE FILLED WITH NON-METALLIC NONSHRINK GROUT CAPABLE OF REACHING A DESIGN COMPRESSIVE STRENGTH OF 5,000 PSI AT 28 DAYS.
7. HOLES IN CONNECTION PLATES SHALL BE NO MORE THAN 1/16" LARGER THAN THE ANCHOR DIAMETER. IF LARGER HOLES ARE REQUIRED FOR ERECTION PURPOSES, CONTRACTOR SHALL NOTIFY ENGINEER SUCH THAT A PLATE WASHER SIZE CAN BE PROVIDED.
8. CONCRETE SHALL HAVE A COMPRESSIVE STRENGTH OF 2500 PSI MINIMUM AT AN AGE OF 21 DAYS.
9. ADHESIVE ANCHORS AND DOWELS: CONCRETE AND MASONRY SUBSTRATES SHALL HAVE THE FOLLOWING MINIMUM AND MAXIMUM TEMPERATURES AT THE TIME OF ADHESIVE ANCHOR AND DOWEL INSTALLATION:

	MINIMUM (°F)	MAXIMUM (°F)
HILTI HIT RE-500V3 SAFE SET	NONE SPECIFIED	
SIMPSON SET-XP	50	100
HILTI HY-70	41	104
HILTI HY-200 SAFE SET	14	104
SIMPSON SET	40	110
SIMPSON AT	0	100

E. THE FOLLOWING PARAMETERS WERE USED IN THE DETERMINATION OF THE ADHESIVE BOND STRESS FOR ADHESIVE ANCHORS:
1. CONCRETE TEMPERATURE RANGE:
   a. EPOXY: HIT-RE 500V3 SAFE SET (ICC-ES ESR-3814): TEMPERATURE RANGE "A" (MAX SHORT TERM TEMP = 110DEGF, MAX LONG TERM TEMP = 80DEGF)
   b. EPOXY: SET-XP (ICC-ES ESR-2508): TEMPERATURE RANGE 1 (MAX. SHORT TERM TEMP. = 110DEGF, MAX. LONG TERM TEMP. = 75DEGF)
   c. EPOXY: SET (ICC-ES ESR-1772): MAX. BASE MATERIAL TEMP. = 110DEG F
   d. ACRYLIC: HIT-HY200 SAFE SET (ICC-ES ESR-3187): TEMPERATURE RANGE "A" (MAX SHORT TERM TEMP = 104DEG F, MAX LONG TERM TEMP = 75DEG F)
   e. ACRYLIC: AT (ICC-ES ESR-5791): MAX. BASE MATERIAL TEMP. = 110DEG F
2. DRILLED HOLE CONDITION: DRY

F. FOR ADHESIVE ANCHORS INSTALLED IN A HORIZONTAL ORIENTATION SUBJECT TO SUSTAINED TENSION LOADING AND ALL UPWARDLY INCLINED (INCLUDING SOFFIT INSTALLATIONS) ORIENTATION:
1. PER ACI 318-11 (D.9.2.2): INSTALLATION SHALL BE PERFORMED BY PERSONNEL CERTIFIED BY ACI/CRSI "ADHESIVE ANCHOR INSTALLER CERTIFICATION PROGRAM." CERTIFICATION SHALL INCLUDE WRITTEN AND PERFORMANCE TESTS.

TIMBER FRAMING

A. UNLESS NOTED OTHERWISE ON THE STRUCTURAL DRAWINGS, ALL STRUCTURAL FRAMING LUMBER SHALL BE CLEARLY MARKED NO. 2 SOUTHERN YELLOW PINE OR DOUGLAS FIR, EXCEPT THAT NON-LOAD BEARING INTERIOR WALLS MAY BE STUD GRADE SOUTHERN YELLOW PINE, DOUGLAS FIR, OR SPRUCE-PINE-FIR.

B. WOOD PRESERVATIVE TREATED LUMBER (PRESSURE TREATED):
1. PRESERVATIVE TREATED LUMBER SHALL BE SOUTHERN YELLOW PINE AND SHALL BE TREATED AS DESCRIBED BELOW.
2. PRESERVATIVE TREATMENT BY PRESSURE PROCESS SHOULD BE PERFORMED ACCORDING TO THE AWPA METHODS DESCRIBED BELOW. THE PRESERVATIVE CHEMICALS SHALL BE WATERBORNE AND CAN INCLUDE ALKALINE COPPER QUAT (ACQ-C, ACQ-D) AND COPPER AZOLE (CBA-C & CA-B) FOR INTERIOR OR EXTERIOR USES AND INORGANIC BORON (SBX) FOR INTERIOR USE ONLY. PRESERVATIVE SHALL NOT CONTAIN ARSENIC OR CHROMIUM AND SHALL NOT CONTAIN AMMONIA CARRIERS.
3. WOOD INSTALLED FOR ABOVE GROUND USE SHALL BE PRESERVATIVE TREATED USING WATER-BORNE PRESERVATIVES IN ACCORDANCE WITH AWPA U2, USE CATEGORY UC3B. THE LOCATIONS TO BE TREATED ARE AS FOLLOWS:
   a. WOOD JOISTS OR WOOD FLOOR WITHOUT JOISTS ARE CLOSER THAN 18 INCHES OR WOOD GIRDERS ARE CLOSER THAN 12 INCHES TO THE EXPOSED GROUND IN CRAWL SPACE.
   b. WOOD FRAMING MEMBERS INCLUDING WOOD SHEATHING WHICH REST ON EXTERIOR FOUNDATION WALLS AND ARE LESS THAN 8INCHES FROM THE EXPOSED EARTH.
   c. WOOD FRAMING MEMBERS OR FURRING STRIPS ATTACHED DIRECTLY TO THE INTERIOR OF EXTERIOR OR CONCRETE WALLS BELOW GRADE.
   d. WOOD SLEEPERS AND SILL PLATES ON CONCRETE OR MASONRY SLAB THAT IS IN DIRECT CONTACT WITH EARTH.
   e. WOOD GIRDER ENDS SUPPORTED BY EXTERIOR MASONRY OR CONCRETE WALLS UNLESS 1/2 INCH AIRSPACE IS PROVIDED ON TOP, SIDES, AND END.
   f. WOOD SIDING CLOSER THAN 6 INCHES TO EARTH.
   g. POSTS OR COLUMNS SUPPORTED DIRECTLY ON A FOOTING UNLESS SEPARATED BY AN IMPERVIOUS MOISTURE BARRIER AND A MINIMUM 6 INCHES ABOVE GRADE AND 1 INCH ABOVE SLAB WHERE A SLAB EXISTS OR 8 INCHES ABOVE EARTH ON A CONCRETE PIER WHERE NO SLAB EXISTS.
   h. PORTIONS OF GLUED-LAMINATED TIMBERS EXPOSED TO WEATHER.
4. WOOD IN CONTACT WITH GROUND (EXPOSED EARTH) OR FRESH WATER SHALL BE PRESERVATIVE TREATED USING WATER-BORNE PRESERVATIVES IN ACCORDANCE WITH AWPA U1, WITH USE CATEGORY UC4C.
5. WOOD MEMBER THAT FORM SUPPORTS OF BUILDINGS, BALCONIES, PORCHES, OR SIMILAR PERMANENT BUILDING APPURTENANCES WHERE SUCH MEMBERS ARE EXPOSED TO THE WEATHER WITHOUT ADEQUATE PROTECTION FROM THE ROOF, EAVE, OVERHANG, ETC. TO PREVENT WATER ACCUMULATION ON THE SURFACE OR BETWEEN JOINTS SHALL BE PRESERVATIVE TREATED USING WATER-BORNE PRESERVATIVES IN ACCORDANCE WITH AWPA U1 WITH USE CATEGORY UC3A.
6. OTHER WOOD MEMBERS NOTED IN THE DRAWINGS SHALL BE PRESERVATIVE TREATED USING WATER-BORNE PRESERVATIVES IN ACCORDANCE WITH AWPA U1 WITH USE CATEGORY UC3A.

C. ALL WOOD HEADERS, BEAMS, AND TOP PLATES SHALL BE NO. 2 SOUTHERN YELLOW PINE OR DOUGLAS FIR.

D. ROOF SHEATHING: 1/2" APA RATED SHEATHING WITH AN EXPOSURE 1 RATING (OR) 1/2" GRADE C-D PLYWOOD WITH EXTERIOR GLUE. PANELS SHALL BE CONTINUOUS OVER TWO OR MORE SPANS WITH THE LONG DIMENSION ORIENTED PERPENDICULAR TO THE FRAMING MEMBERS. NAIL WITH 8D COMMON NAILS AT 6" ON CENTER AT SUPPORTED EDGES AND 12" ON CENTER AT INTERMEDIATE SUPPORTS. STAGGER JOINTS IN...

E. SOLID 2X BLOCKING OR BANDBOARD SHALL BE PROVIDED AT SUPPORTS AND CANTILEVER ENDS OF ALL WOOD JOISTS, AND BETWEEN SUPPORTS IN ROWS NOT EXCEEDING 8'-0" APART.

F. REFER TO THE ARCHITECTURAL DRAWINGS FOR ADDITIONAL WOOD FRAMING MEMBERS. PROVIDE ADDITIONAL WOOD FRAMING MEMBERS SHOWN ON THE ARCHITECTURAL DRAWINGS EVEN THOUGH THEY MAY NOT BE SHOWN ON THE STRUCTURAL DRAWINGS.

TIMBER FRAMING CONNECTIONS

A. NAILING AND ATTACHMENT OF ALL FRAMING MEMBERS AND SHEATHING SHALL BE AS SPECIFIED IN THE INTERNATIONAL BUILDING CODE NAILING SCHEDULE UNLESS NOTED OTHERWISE ON THE STRUCTURAL DRAWINGS. COMMON WIRE NAILS OR SPIKES, OR GALVANIZED BOX NAILS SHALL BE USED FOR ALL FRAMING UNLESS NOTED OTHERWISE ON THE STRUCTURAL DRAWINGS. LIST OF FASTENERS (WITH PENNY WEIGHT/NAIL TYPE CONVERSIONS) USED IN TABLE R602.3(1) AND THROUGHOUT THE DRAWINGS ARE AS FOLLOWS:

NAIL SIZE
2 1/2" X 0.113" (8d BOX)
2 1/2" X 0.131" (8d COMMON)
3" X 0.128" (10d BOX)
3" X 0.131"
3" X 0.148" (10d COMMON)
3 1/2" X 0.135" (16d BOX)
3 1/2" X 0.162" (16d COMMON)

B. SIMPSON STRONG TIE STEEL CONNECTORS IN CONTACT WITH PRESSURE TREATED LUMBER SHALL THE FOLLOWING COMPOSITION/ FINISH:

USAGE	TYPE OF PRESERVATIVE RETENTION LEVEL	SIMPSON FINISH
INTERIOR	SBX/DOT	G90
INTERIOR/EXTERIOR	ACQ (ALL) / 0.40 PCF (MAX)	HDG / ZMAX
INTERIOR/EXTERIOR	CBA-A / 0.41 PCF (MAX)	HDG / ZMAX
INTERIOR/EXTERIOR	CA-B / 0.21 PCF (MAX)	HDG / ZMAX

UNCERTAIN OR RETENTION LEVELS GREATER THAN NOTED ABOVE WILL REQUIRE TYPE 304 OR 316 STAINLESS STEEL CONNECTORS AND FASTENERS.

C. ALL BOLTS AND LAG SCREWS SHALL HAVE STANDARD WASHERS. ALL ANCHOR AND EXPANSION BOLTS USED IN WOOD TO CONCRETE CONNECTIONS IN CRAWLSPACE AREAS SHALL BE HOT DIP GALVANIZED OR STAINLESS STEEL.

GLUE LAMINATED WOOD

A. GLUE LAMINATED WOOD MEMBERS SHALL BE SOUTHERN PINE OR DOUGLAS FIR, WITH GRADE COMBINATIONS THAT FURNISH A MINIMUM ALLOWABLE EXTREME FIBER STRESS IN BENDING OF 2,400 POUNDS PER SQUARE INCH IN THE TENSION ZONE.

B. MEMBERS SHALL CONFORM TO THE LATEST EDITION OF "STANDARD SPECIFICATIONS FOR STRUCTURAL GLUED LAMINATED TIMBER OF SOFTWOOD SPECIES (AITC 117)," THE AMERICAN INSTITUTE OF TIMBER CONSTRUCTION.

C. MEMBERS TO BE COVERED SHALL BE AITC INDUSTRIAL APPEARANCE GRADE. EXPOSED MEMBERS SHALL BE AITC ARCHITECTURAL (OR PREMIUM) APPEARANCE GRADE. ALL MEMBERS TO BE EXTERIOR GRADE OR PRESSURE TREATED.

D. ALL HOLES FOR BOLTS OR CONNECTORS SHALL BE SHOP DRILLED USING TEMPLATES. BOLT HOLES SHALL BE 1/16" LARGER THAN BOLT DIAMETER.

E. PROVIDE STANDARD CAMBER IN ALL MEMBERS TO COMPENSATE FOR SHORT AND LONG TERM DEAD LOAD DEFLECTION, UNLESS CAMBER IS SHOWN ON THE STRUCTURAL DRAWINGS.

TSEN-ENGINEERING
TPBE Firm F-12778
210 Barton Springs Rd. Ste. 250
Austin, TX 78704
(512) 474 4001
Project # 9210028

INTERIM REVIEW DOCUMENTS
(NOT INTENDED FOR BIDDING, PERMIT OR CONSTRUCTION PURPOSES)
JAMIE BUCHANAN, P.E.
TEXAS REGISTRATION No: 92680
DATE: XX/XX/XXXX

GERMAN FREE SCHOOL
507 E. 10th Street, Austin Texas 78701

PLEASE RECYCLE

ISSUE	DATE

# REVISION	DATE

SEE PROJECT INFORMATION

PROJECT NO. XXXXX
DATE 08/24/2021

STRUCTURAL NOTES

S-002

SPECIAL INSPECTIONS

1. SPECIAL INSPECTIONS SHALL BE PERFORMED IN ACCORDANCE WITH CHAPTER 17 OF THE 2021 INTERNATIONAL BUILDING CODE (IBC) BY A SPECIAL INSPECTOR HIRED BY THE OWNER TO PERFORM THE SPECIAL INSPECTIONS LISTED BELOW. THE SPECIAL INSPECTOR SHALL BE QUALIFIED BY AN APPROVED AGENCY ACCORDING TO THE CITY'S BUILDING OFFICIAL TO PERFORM THE SPECIAL INSPECTIONS FOR WHICH THEY WILL BE UNDERTAKING. THE CONTRACTOR SHALL COORDINATE WITH AND NOTIFY THE SPECIAL INSPECTOR OF ALL TESTS. THE SPECIAL INSPECTOR SHALL BE RESPONSIBLE TO VERIFY THAT THE ITEMS DETAILED IN THE CONSTRUCTION DOCUMENTS WERE BUILT ACCORDINGLY AND SHALL PREPARE, SIGN, AND FURNISH INSPECTION REPORTS TO THE BUILDING OFFICIAL AND THE ARCHITECT FOR ALL TIME SPENT AT THE SITE. THE INSPECTOR SHALL BRING DISCREPANCIES TO THE IMMEDIATE ATTENTION OF THE GENERAL CONTRACTOR FOR CORRECTION. IF THE DISCREPANCIES ARE NOT CORRECTED, THE DISCREPANCIES SHALL BE BROUGHT TO THE ATTENTION OF THE BUILDING OFFICIAL AND TO THE ARCHITECT PRIOR TO THE COMPLETION OF THAT PHASE OF THE WORK. THESE SPECIAL INSPECTIONS ARE IN ADDITION TO THE OTHER INSPECTIONS LISTED IN THESE STRUCTURAL NOTES OR PROJECT SPECIFICATIONS.

VERIFICATION AND INSPECTION TASKS OF CONCRETE CONSTRUCTION (IBC TABLE 1705.3)

SPECIAL INSPECTION REQUIRED	VERIFICATION AND INSPECTION	INSPECTION FREQUENCY		REFERENCED STANDARD	IBC REFERENCE
		CONTINUOUS	PERIODIC		
YES	1. INSPECT REINFORCEMENT, INCLUDING PRESTRESSING TENDONS, AND VERIFY PLACEMENT.	--	X	ACI 318: CH. 20, 25.2, 25.3, 26.6.1-26.6.3	--
	2. REINFORCING BAR WELDING:			AWS D1.4 ACI 318: 26.6.4	--
NO	A. VERIFY WELDABILITY OF REINFORCING BARS OTHER THAN ASTM A706	--	X		
NO	B. INSPECT SINGLE-PASS FILLET WELDS, MAXIMUM 5/16"	--	X		
NO	C. INSPECT ALL OTHER WELDS.	X	--		
YES	3. INSPECT ANCHORS CAST IN CONCRETE.	--	X	ACI 318:17.8.2	--
	4. INSPECT ANCHORS POST-INSTALLED HARDENED CONCRETE MEMBERS.**				--
YES	A. ADHESIVE ANCHORS INSTALLED IN HORIZONTALLY OR UPWARDLY INCLINED ORIENTATIONS TO RESIST SUSTAINED...	X	--	ACI 318: 17.8.2.4	
YES	B. MECHANICAL ANCHORS AND ADHESIVE ANCHORS NOT DEFINED IN 4.A.	--	X	ACI 318: 17.8.2	
YES	5. VERIFY USE OF REQUIRED DESIGN MIX.	--	X	ACI 318: CH. 19, 26.4.3, 26.4.4	1904.1, 1904.2
YES	6. PRIOR TO CONCRETE PLACEMENT, FABRICATE SPECIMENS FOR STRENGTH TESTS, PERFORM SUMP AND AIR CONTENT TESTS, AND DETERMINE THE TEMPERATURE OF THE CONCRETE.	X	--	ASTM C172 ASTM C31 ACI 318: 26.5, 26.12	--
YES	7. INSPECT CONCRETE AND SHOTCRETE PLACEMENT FOR PROPER APPLICATION TECHNIQUES.	X	--	ACI 318: 26.5	--
YES	8. VERIFY MAINTENANCE OF SPECIFIED CURING TEMPERATURE AND TECHNIQUES.	--	X	ACI 318: 26.5.3-26.5.5	--
	9. INSPECT PRESTRESSED CONCRETE FOR:			ACI 318: 26.10	--
NO	A. APPLICATION OF PRESTRESSING FORCES	X	--		
NO	B. GROUTING OF BONDED PRESTRESSING TENDONS.	X	--		
NO	10. INSPECT ERECTION OF PRECAST CONCRETE MEMBERS.	--	X	ACI 318: 26.9	--
	11. FOR PRECAST CONCRETE DIAPHRAGM CONNECTIONS OR REINFORCEMENT AT JOINTS CLASSIFIED AS MODERATE OR HIGH DEFORMABILITY ELEMENTS (MDE OR HDE) IN STRUCTURES ASSIGNED TO SEISMIC DESIGN CATEGORY C, D, E OR F, INSPECT SUCH CONNECTIONS AND REINFORCEMENT IN THE FIELD FOR:			ACI 318: 26.13.1.3	--
NO	A. INSTALLATION OF THE EMBEDDED PARTS.	X	--	ACI 550.5	
NO	B. COMPLETION OF THE CONTINUITY OF REINFORCEMENT ACROSS JOINTS.	X	--		
NO	C. COMPLETION OF CONNECTIONS IN THE FIELD.	X	--		
NO	12. INSPECT INSTALLATION TOLERANCES OF PRECAST CONCRETE DIAPHRAGM CONNECTIONS FOR COMPLIANCE WITH ACI 550.5.	--	X	ACI 318: 26.13.1.3	--
YES	13. VERIFY IN-SITU CONCRETE STRENGTH, PRIOR TO STRESSING OF TENDONS IN POST-TENSIONED CONCRETE AND PRIOR TO REMOVAL OF SHORES AND FORMS FROM BEAMS AND STRUCTURAL SLABS.	--	X	ACI 318: 26.11.2	--
YES	14. INSPECT FORMWORK FOR SHAPE, LOCATION AND DIMENSIONS OF THE CONCRETE MEMBER BEING FORMED.	--	X	ACI 318: 26.11.1.2(b)	--

* WHERE APPLICABLE, SEE SECTION 1705.13, SPECIAL INSPECTIONS FOR SEISMIC RESISTANCE

** SPECIFIC REQUIREMENTS FOR SPECIAL INSPECTION SHALL BE INCLUDED IN THE RESEARCH REPORT FOR THE ANCHOR ISSUED BY AN APPROVED SOURCE IN ACCORDANCE WITH 17.8.2 IN ACI 318, OR OTHER QUALIFICATION PROCEDURES. WHERE SPECIFIC REQUIREMENTS ARE NOT PROVIDED, SPECIAL INSPECTION REQUIREMENTS SHALL BE SPECIFIED BY THE REGISTERED DESIGN PROFESSIONAL AND SHALL BE APPROVED BY THE BUILDING OFFICIAL PRIOR TO THE COMMENCEMENT OF THE WORK.

REQUIRED SPECIAL INSPECTIONS AND TESTS OF SOILS (IBC TABLE 1705.6)

SPECIAL INSPECTION REQUIRED	TYPE	INSPECTION FREQUENCY	
		CONTINUOUS	PERIODIC
YES	1. VERIFY MATERIALS BELOW SHALLOW FOUNDATIONS ARE ADEQUATE TO ACHIEVE THE DESIGN BEARING CAPACITY.	--	X
YES	2. VERIFY EXCAVATIONS ARE EXTENDED TO PROPER DEPTH AND HAVE REACHED PROPER MATERIAL.	--	X
YES	3. PERFORM CLASSIFICATION AND TESTING OF COMPACTED FILL MATERIALS.	--	X
YES	4. DURING FILL PLACEMENT, VERIFY USE OF PROPER MATERIALS AND PROCEDURES IN ACCORDANCE WITH THE PROVISIONS OF THE APPROVED GEOTECHNICAL REPORT. VERIFY DENSITIES AND LIFT THICKNESSES DURING PLACEMENT AND COMPACTION OF CONTROLLED FILL.	X	--
YES	5. PRIOR TO PLACEMENT OF COMPACTED FILL, INSPECT SUBGRADE AND VERIFY THAT SITE HAS BEEN PREPARED PROPERLY.	--	X

ABBREVIATIONS

ABOVE FINISHED FLOOR	A.F.F.
ADDITIONAL	ADD'L
ADJACENT	ADJ.
AIR CONDITIONER	A/C
AIR HANDLING UNIT	AHU
ALTERNATE	ALT
AMERICAN CONCRETE INSTITUTE	A.C.I.
AMERICAN INSTITUTE OF STEEL CONSTRUCTION	A.I.S.C.
ANCHOR BOLT	A.B.
ANGLE	L
APPROXIMATE	APPROX.
ARCHITECT	ARCH
ARCHITECTURAL	ARCH'L
AT	@
BACK FACE	B.F.
BASEMENT	BSMT.
BEAM	BM
BEARING	BRG.
BELOW FINISH FLOOR	B.F.F.
BETWEEN	BTWN
BLOCKING	BLKG.
BOTTOM	BOT. OR BOTT.
BOTTOM OF	B.O.
BOTTOM OF STEEL	B.O.S.
BRICK LEDGE	B.L.
BUILDING	BLDG.
CAST-IN-PLACE	C.I.P.
CEILING	CLG.
CENTER OF GRAVITY	C.G.
CENTER OF GRAVITY OR STRAND	C.G.S.
CENTERLINE	CL
CLEAR OR CLEARANCE	CLR.
COLD FORMED STEEL	CFS
COLUMN	COL.
COMPRESSION	C
CONCRETE	CONC.
CONCRETE MASONRY UNIT	CMU
CONNECTION	CONN.
CONSTRUCTION	CONST.
CONSTRUCTION JOINT	CONST. JT.
CONTINUOUS	CONT.
CONTRACTOR	CONTR.
CONTROL JOINT	C.J.
COORDINATE	COORD.
DEAD LOAD	DL
DIAGONAL	DIAG.
DIAMETER	DIA. OR Ø
DIMENSION	DIM.
DOUBLE	DBL
DOWEL	DWL
DRAWING	DWG
EACH	EA.
EACH FACE	E.F.
EACH WAY	E.W.
ELECTRICAL	ELEC.
ELEVATION	EL.
ELEVATOR	ELEV.
ENGINEER	ENGR.
EQUAL	EQ
EQUIPMENT	EQUIP.
EXISTING	EXIST.
EXISTING	(E)
EXPANSION	EXP.
EXPANSION JOINT	EJ
EXTERIOR	EXT.
FABRICATE	FAB.
FAR SIDE	FS
FIELD VERIFY	F.V.
FINISH FLOOR	FF
FIXED NUMBER	FN
FLOOR DRAIN	FD
FLUSH BEAM	F.B.
FOOT (OR) FEET	FT
FOUNDATION	FDN

ABBREVIATIONS

GAGE OR GAUGE	GA.
GALVANIZED	GALV.
GENERAL CONTRACTOR	G.C.
HEADED STUD	HS
HEADER	HDR.
HEIGHT	HT.
HIGH POINT	H.P.
HOLLOW STRUCTURAL SECTION	HSS
HORIZONTAL	HORIZ.
HORIZONTAL BRACE	H.B.
INFORMATION	INFO.
INSIDE DIAMETER	ID.
INSIDE FACE	I.F.
INTERIOR	INT.
INTERMEDIATE	INTERM.
JOINT	JT.
JOIST	JST.
JOIST GIRDER	J.G.
KIP PER LINEAR FOOT	KLF
KIP PER SQUARE FOOT	KSF
KIP PER SQUARE INCH	KSI
KIPS (1000 LBS)	K
LIGHTWEIGHT	LW.
LIGHTWEIGHT CONCRETE	LWC.
LIVE LOAD	LL
LOCATION	LOC.
LONG LEG HORIZONTAL	LLH
LONG LEG VERTICAL	LLV
LONG SIDE HORIZONTAL	LSH
LONG SIDE VERTICAL	LSV
LONGITUDINAL	LONG
LOW POINT	L.P.
MANUFACTURER	MANUF.
MATERIAL	MAT.
MAXIMUM	MAX.
MECHANICAL	MECH.
MECHANICAL, ELECTRICAL, PLUMBING	MEP
METAL	MTL
MEZZANINE	MEZZ.
MIDDLE	MID.
MINIMUM	MIN.
MISCELLANEOUS	MISC.
MOMENT CONNECTION	MC
NEAR SIDE	NS
NEW	(N)
NOMINAL	NOM.
NON-SHRINK	N.S.
NOT IN CONTRACT	N.I.C.
NOT TO SCALE	N.T.S.
NUMBER	NO.
ON CENTER	O.C.
OPENING	OPNG.
OPPOSITE	OPP.
OPPOSITE HAND	O.H.
OUTSIDE DIAMETER	O.D.
OUTSIDE FACE	O.F.
PAN	P
PANEL JOINT	P.J.
PERPENDICULAR	PERP.
PLATE	PL
POST-TENSION(ED)	P-T
POUNDS	# OR LBS.
POUNDS PER CUBIC FOOT	PCF
POUNDS PER LINEAR FOOT	PLF
POUNDS PER SQUARE FOOT	PSF
POUNDS PER SQUARE INCH	PSI
PRE-ENGINEERED METAL BUILDING	PEMB
PRECAST CONCRETE	P/C
PREFABRICATED	PREFAB.

ABBREVIATIONS

PRELIMINARY	PRELIM.
PROJECTION	PROJ.
QUANTITY	QTY.
REINFORCE(ING)(ED)(MENT)	REINF.
REMAINDER	R
REQUIRE (D)	REQ.('D)
RETENTION SYSTEM	RET. SYS.
ROOF TOP UNIT	RTU
ROUGH OPENING	R.O.
SCHEDULE	SCHED.
SIMILAR	SIM.
SLAB-ON-GRADE	S.O.G.
SPECIFICATION	SPECS.
SPECIFIED	SPEC'D.
SQUARE	SQ
SQUARE FOOT	SF
STAINLESS STEEL	S.S.
STANDARD	STD
STEEL	STL
STEEL JOIST INSTITUTE	S.J.I.
STIFFENER	STIFF.
STIRRUP	STIR.
STRUCTURAL	STRUCT'L
STRUCTURE	STRUCT.
SUBCONTRACTOR	SUBCONTR.
TEMPORARY	TEMP.
TENSION	T
THICK	THK
TONGUE AND GROOVE	T&G
TOP AND BOTTOM	T&B
TOP OF	T.O.
TOP OF BEAM	T.O.B.
TOP OF CONCRETE	T.O.C.
TOP OF FOOTING	T.O.F.
TOP OF JOIST	T.O.J.
TOP OF PIER	T.O.P.
TOP OF STEEL	T.O.S.
TOP OF WALL	T.O.W.
TYPICAL	TYP.
UNLESS NOTED OTHERWISE	U.N.O.
VERTICAL	VERT.
WATER STOP	WS
WELDED DEFORMED BAR ANCHOR	D.B.A.
WELDED WIRE FABRIC	W.W.F.
WIDE FLANGE	WF
WIND BRACE	WB
WIND LOAD	WL
WITH	W/
WITHOUT	W/O
WORK POINT	WP

TSEN-ENGINEERING

TPBE Firm F-12778
210 Barton Springs Rd. Ste. 250
Austin, TX 78704
(512) 474 4001
Project # 9210028

INTERIM REVIEW DOCUMENTS
(NOT INTENDED FOR BIDDING, PERMIT OR CONSTRUCTION PURPOSES)
JAMIE BUCHANAN, P.E.
TEXAS REGISTRATION No: 92680
DATE: XX/XX/XXXX

GERMAN FREE SCHOOL
507 E. 10th Street, Austin Texas 78701

PLEASE RECYCLE

ISSUE	DATE

# REVISION	DATE

SEE PROJECT INFORMATION

PROJECT NO. XXXXX
DATE 08/24/2021

SPECIAL INSPECTION

S-003

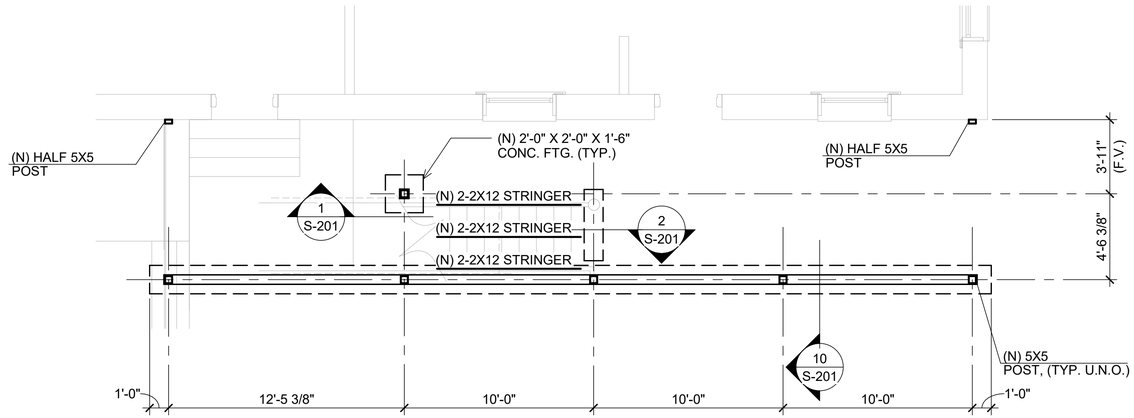

1 PORCH FOUNDATION PLAN

SCALE: 1/4" = 1'-0"

PLAN NOTES:

1. EXISTING FOUNDATIONS (ASSUMED SPREAD FOOTINGS) AND COLUMNS WILL NEED TO BE REMOVED.

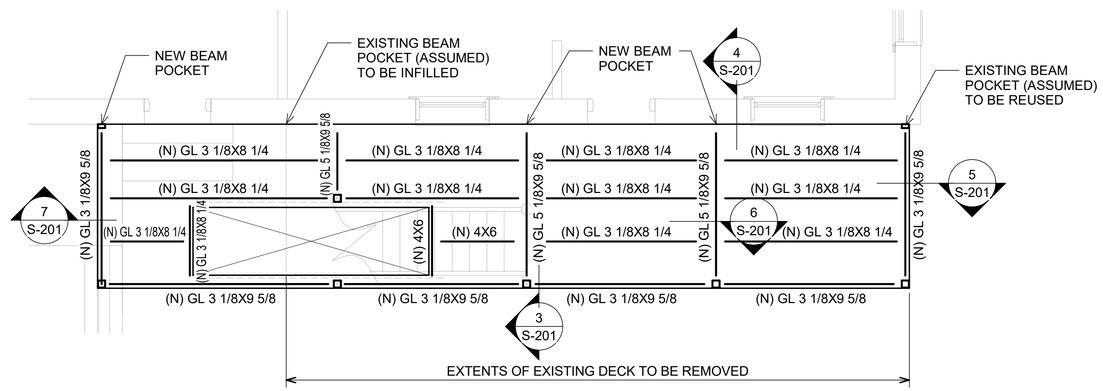

2 PORCH FLOOR FRAMING PLAN

SCALE: 1/4" = 1'-0"

PLAN NOTES:

1. ALL GLU LAM BEAMS TO BE EXTERIOR GRADE.
2. WE INTEND FOR CONNECTION TO EXISTING BUILDING AT FLOOR TO BE SIMILAR TO EXISTING CONNECTION. EXISTING CONNECTIONS WILL NEED TO BE EXPOSED PRIOR TO CONSTRUCTION IN ORDER TO VERIFY EXISTING CONFIGURATION.
3. EXISTING PORCH FLOOR FRAMING WILL BE REMOVED AND REPLACED.

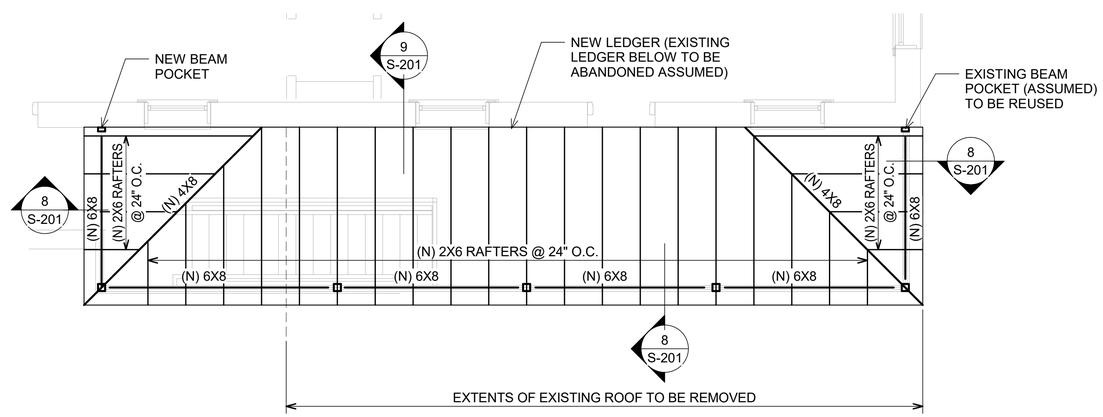

3 PORCH ROOF FRAMING PLAN

SCALE: 1/4" = 1'-0"

PLAN NOTES:

1. SEE ARCHITECTURAL DRAWINGS FOR EXACT LOCATIONS OF ROOF SLOPES, HIPS, VALLEYS, AND RIDGES NOT SPECIFICALLY DIMENSIONED.
2. VERIFY AND COORDINATE ALL DIMENSIONS W/ ARCHITECTURAL DRAWINGS.
3. WE INTEND FOR CONNECTION TO EXISTING BUILDING AT ROOF TO BE SIMILAR TO EXISTING CONNECTION. EXISTING CONNECTIONS WILL NEED TO BE EXPOSED PRIOR TO CONSTRUCTION IN ORDER TO VERIFY EXISTING CONFIGURATION.
4. EXISTING PORCH ROOF FRAMING WILL BE REMOVED AND REPLACED.

TSEN-ENGINEERING

TPBE Firm F-12778
210 Barton Springs Rd. Ste. 250
Austin, TX 78704
(512) 474 4001
Project # 9210028

INTERIM REVIEW DOCUMENTS
(NOT INTENDED FOR BIDDING, PERMIT OR CONSTRUCTION PURPOSES)
JAMIE BUCHANAN, P.E.
TEXAS REGISTRATION No: 92680
DATE: XX/XX/XXXX

GERMAN FREE SCHOOL

507 E. 10th Street, Austin Texas 78701

PLEASE RECYCLE

ISSUE	DATE

# REVISION	DATE
SEE PROJECT INFORMATION	

PROJECT NO. XXXXX
DATE 08/24/2021

FOUNDATION, FLOOR FRAMING & ROOF FRAMING PLAN

S-101

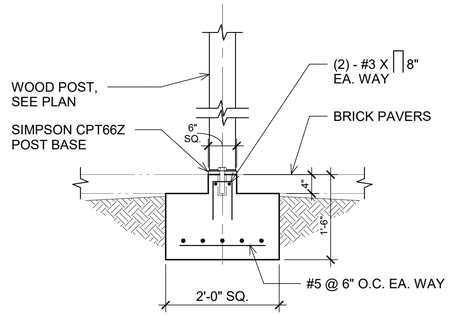

1 DETAIL
1/S-101 SCALE: 3/4" = 1'-0"

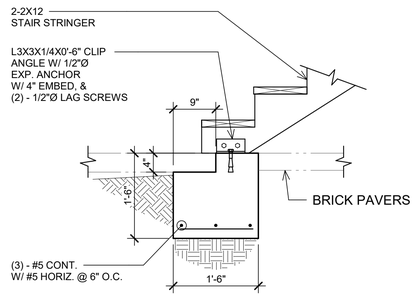

2 TYPICAL FOOTING AT STAIR BASE DETAIL
1/S-101 SCALE: 3/4" = 1'-0"

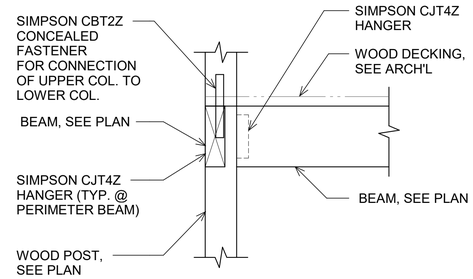

3 DETAIL
2/S-101 SCALE: 1" = 1'-0"

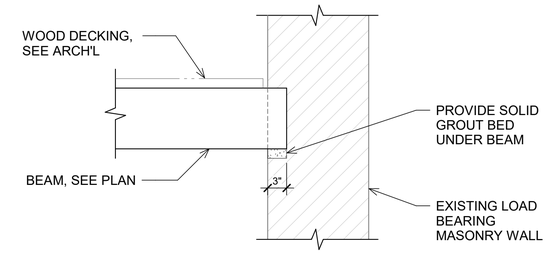

4 DETAIL
2/S-101 SCALE: 1" = 1'-0"

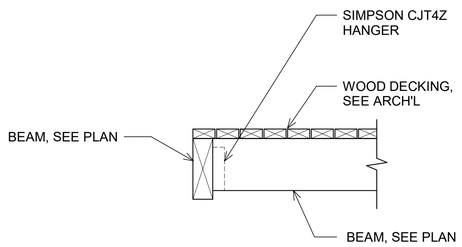

5 DETAIL
2/S-101 SCALE: 1" = 1'-0"

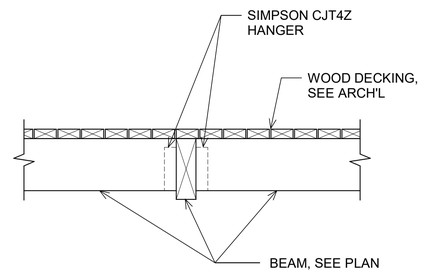

6 DETAIL
2/S-101 SCALE: 1" = 1'-0"

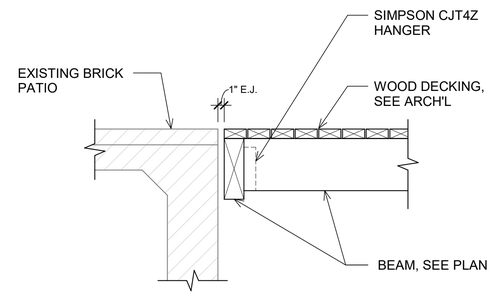

7 DETAIL
2/S-101 SCALE: 1" = 1'-0"

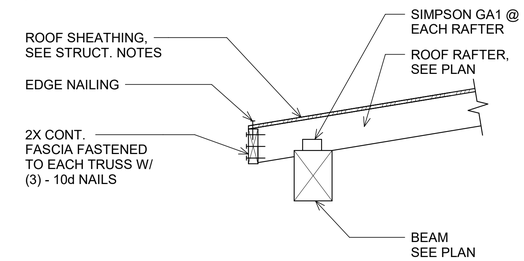

8 ROOF RAFTER DETAIL @ BEAM
3/S-101 SCALE: 1" = 1'-0"

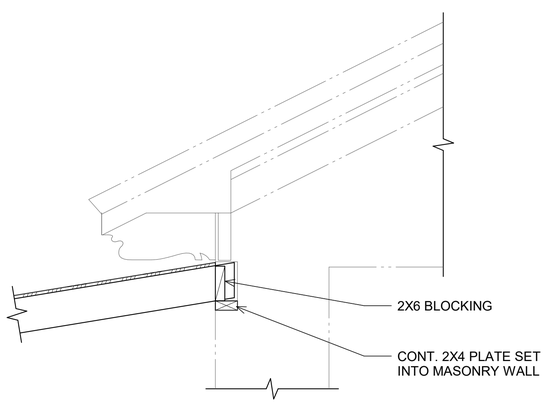

9 DETAIL
3/S-101 SCALE: 1" = 1'-0"

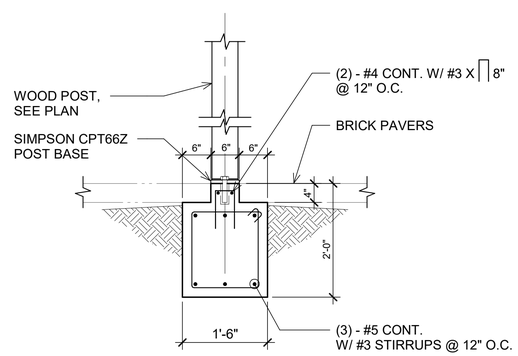

10 DETAIL
1/S-101 SCALE: 3/4" = 1'-0"

TSEN-ENGINEERING
TPBE Firm F-12778
210 Barton Springs Rd. Ste. 250
Austin, TX 78704
(512) 474 4001
Project # 9210028

INTERIM REVIEW DOCUMENTS
(NOT INTENDED FOR BIDDING, PERMIT OR CONSTRUCTION PURPOSES)
JAMIE BUCHANAN, P.E.
TEXAS REGISTRATION No: 92680
DATE: XX/XX/XXXX

GERMAN FREE SCHOOL
507 E. 10th Street, Austin Texas 78701

PLEASE RECYCLE

ISSUE	DATE

# REVISION	DATE

SEE PROJECT INFORMATION

PROJECT NO. XXXXX
DATE 08/24/2021

STRUCTURAL DETAILS

S-201

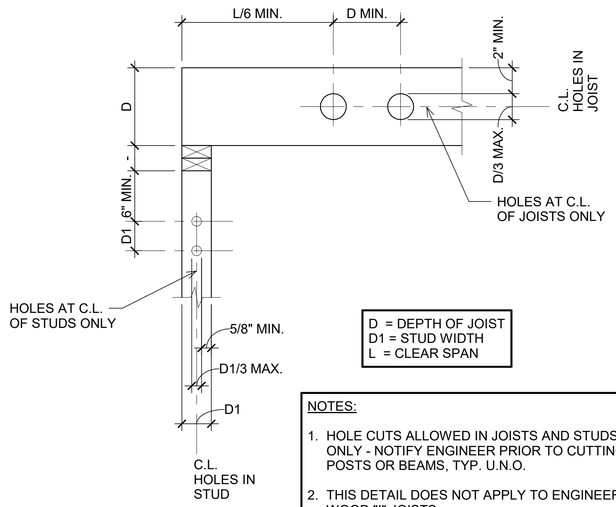

D = DEPTH OF JOIST
D1 = STUD WIDTH
L = CLEAR SPAN

NOTES:

1. HOLE CUTS ALLOWED IN JOISTS AND STUDS ONLY - NOTIFY ENGINEER PRIOR TO CUTTING POSTS OR BEAMS, TYP. U.N.O.
2. THIS DETAIL DOES NOT APPLY TO ENGINEERED WOOD "I" JOISTS.

1 TYPICAL HOLES IN WOOD DETAIL
NO SCALE

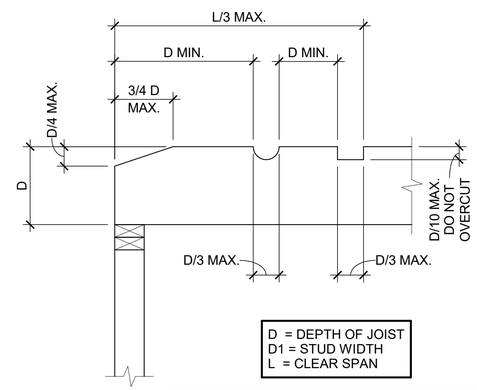

D = DEPTH OF JOIST
D1 = STUD WIDTH
L = CLEAR SPAN

NOTES:

1. NOTCH CUTS ALLOWED IN TOP OF JOISTS ONLY - NOTIFY ENGINEER PRIOR TO CUTTING BEAMS, TYP. U.N.O.
2. THIS DETAIL DOES NOT APPLY TO ENGINEERED WOOD "I" JOISTS.

2 TYPICAL NOTCHES IN WOOD DETAIL
NO SCALE

TSEN-ENGINEERING
TPBE Firm F-12778
210 Barton Springs Rd. Ste. 250
Austin, TX 78704
(512) 474 4001
Project # 9210028

INTERIM REVIEW DOCUMENTS
(NOT INTENDED FOR BIDDING, PERMIT OR CONSTRUCTION PURPOSES)
JAMIE BUCHANAN, P.E.
TEXAS REGISTRATION No: 92680
DATE: XX/XX/XXXX

GERMAN FREE SCHOOL
507 E. 10th Street, Austin Texas 78701

PLEASE RECYCLE

ISSUE	DATE

REVISION	DATE

SEE PROJECT INFORMATION

PROJECT NO. XXXXX
DATE 08/24/2021

STRUCTURAL DETAILS

S-202