SITE PLAN EXEMPTION
FOR
EAST 3RD AND CONGRESS AVENUE
EAST 3RD AND CONGRESS AVENUE
CITY OF AUSTIN, TRAVIS COUNTY, TEXAS 78701

OWNER / DEVELOPER
HPI REAL ESTATE MANAGEMENT, INC
301 CONGRESS AVENUE, STE. 135
AUSTIN, TEXAS, 78701
CONTACT: RUTH ST. JAMES

CIVIL ENGINEER:
WGI
2021 E. 5TH STREET, SUITE 200
AUSTIN, TX 78702
PHONE: (512) 669-5560
CONTACT: AMY D. NESKAR

SURVEYOR:
STANTEC
1905 ALDRICH STREET, SUITE 300
AUSTIN, TEXAS, 78723
CONTACT: MARK A. MERCADO, R.P.L.S

LANDSCAPE ARCHITECT:
ORO DESIGN GROUP
7708 RIALTO BLVD. SUITE 125
AUSTIN, TX 78735
PHONE: (501) 253-2418
CONTACT: COURTNEY TARVER

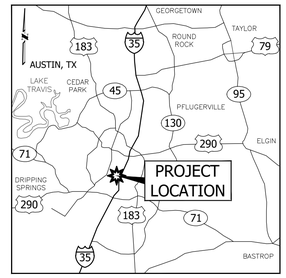

VICINITY MAP
N.T.S.

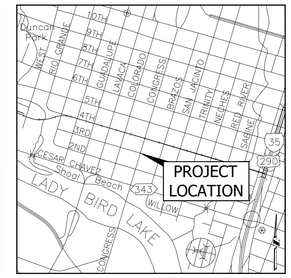

LOCATION MAP
N.T.S.

SUBMITTAL DATE:
MARCH 17, 2022

PROJECT DESCRIPTION:
THE SCOPE OF THIS SITE PLAN EXEMPTION IS TO ADD NEW LANDSCAPE IMPROVEMENTS, BOTH HARDSCAPE AND SOFTSCAPE, TO AN EXISTING STREETSCAPE.

RELATED CASES: UCC-230119-01-01 (AULCC)
2022-117568 LM (LICENSE AGREEMENT)

SHEET INDEX	
SHEET NO.	SHEET TITLE
01 C001	COVER SHEET
02 C002	GENERAL CONSTRUCTION NOTES
03 C003	AUSTIN WATER GENERAL INFO & CONST. NOTES
04 C100	EXISTING CONDITIONS & DEMOLITION PLAN
05 CS100	OVERALL SITE & EROSION CONTROL PLAN
06 LA	LICENSE AGREEMENT PLAN SHEET
07 CU100	OVERALL UTILITY PLAN
08 C500	STANDARD DETAILS (ENS)
09 L1	LANDSCAPE PLAN AND CALCULATIONS
10 L2	LANDSCAPE DETAILS
11 L3	LANDSCAPE DETAILS
12 L4	IRRIGATION PLAN
13 L5	IRRIGATION DETAILS

FLOODPLAIN:
THE FEDERAL EMERGENCY MANAGEMENT AGENCY'S FLOOD INSURANCE RATE MAP FOR THE CITY OF AUSTIN, TRAVIS COUNTY, TEXAS AND INCORPORATED AREAS, COMMUNITY NO. 480624, DATED JANUARY 22, 2020, INDICATES THAT THIS TRACT IS WITHIN ZONE "X" UNSHADED, AREAS DETERMINED TO BE OUTSIDE THE 0.2% ANNUAL CHANCE FLOODPLAIN, AS SHOWN ON MAP AND PANEL NO. 48453C0465K. THIS DETERMINATION HAS BEEN MADE BY SCALING THE PROPERTY ON THE ABOVE REFERENCED MAP AND IS NOT THE RESULT OF AN ELEVATION SURVEY. WARNING: IF THIS SITE IS NOT WITHIN AN IDENTIFIED SPECIAL FLOOD HAZARD AREA,

THIS FLOOD STATEMENT DOES NOT IMPLY THAT THE PROPERTY AND/OR THE STRUCTURES THEREON WILL BE FREE FROM FLOODING OR FLOOD DAMAGE. ON RARE OCCASIONS, GREATER FLOODS CAN AND WILL OCCUR AND FLOOD HEIGHTS MAY BE INCREASED BY MAN-MADE OR NATURAL CAUSES. THIS FLOOD STATEMENT SHALL NOT CREATE LIABILITY ON THE PART OF THE SURVEYOR.

BENCHMARKS:
TBM 75- PK NAIL WITH "STANTEC" WASHER FOUND IN CONCRETE SIDEWALK ON WEST SIDE OF BRAZOS STREET.ACROSS FROM CONCRETE ALLEY AND ±5' NORTH OF GARAGE DRIVEWAY.
ELEVATION = 475.81'.

TBM 7006- PK NAIL WITH "STANTEC" WASHER SET IN CONCRETE GUTTER ON EAST SIDE OF CONGRESS STREET AT NORTHEAST INTERSECTION OF 3RD STREET. ±7' SOUTHEAST OF TRAFFIC SIGNAL POLE.
ELEVATION = 474.43'.

TBM 9002- PK NAIL FOUND IN CONCRETE SIDEWALK AT NORTHWEST INTERSECTION OF BRAZOS STREET AND 4TH STREET. ±8' EAST OF CONCRETE RAMP.
ELEVATION = 479.79'.

TBM 9008- COTTON SPINDLE FOUND IN CONCRETE WALK ON SOUTH SIDE OF 4TH STREET AT CENTERLINE OF COURT YARD OF BUILDING. ±15' WEST OF ELECTRIC CABINET.
ELEVATION = 480.25'.

BEARING BASIS:
THE BASIS OF BEARING OF THE SURVEY SHOWN HEREON IS TEXAS STATE PLANE COORDINATE SYSTEM, CENTRAL TEXAS ZONE, NAD83(2011), BY UTILIZING REAL-TIME KINEMATIC (RTK) CORRECTIONS PROVIDED BY RTK COOPERATIVE NETWORK, MANAGED BY ALLTERRA CENTRAL. G12

WATERSHED:
THE PROJECT IS LOCATED IN THE LADY BIRD LAKE (NORTH) WATERSHED AND IS CLASSIFIED AS AN URBAN WATERSHED.

LEGAL DESCRIPTION:
A 1.605 ACRES (69,943 SF) TRACT OF LAND CONTAINING LOT 1-2&7-12 & WEST 18' OF LOT 3, BLOCK 030, ORIGINAL CITY PLUS VACANT 20 FOOT ALLEY & 0.059 ACRES OF VACANT STREET.

NOTES:
1. PROPERTY ADDRESS: EAST 3RD AND CONGRESS AVENUE, AUSTIN, TEXAS, 78701
2. CONTRACTOR TO FIELD VERIFY UTILITIES AS REQUIRED. CITY OF AUSTIN GIS WAS USED TO DELINEATE EXISTING UTILITIES ALIGNMENTS AND SHOULD ONLY BE REFERENCED AS AN APPROXIMATION ONLY.
3. THE LOCATION OF FENCES AND THE SIZE AND LOCATION OF UTILITY STRUCTURES, (IF SHOWN), MAY BE EXAGGERATED FOR GRAPHICAL CLARITY.
4. ADDITIONAL NUMBERS (IF SHOWN) IN THE TREE LIST AT THE END OF THE TREE DESCRIPTION, REPRESENT THE SIZES AND NUMBER OF MULTI-TRUNK TREES.
5. UNDERGROUND UTILITIES SHOWN HEREON ARE BASED ON TOPOGRAPHIC AND TREE SURVEY PROVIDED BY STANTEC .
6. THIS SURVEY WAS DONE FOR THE PURPOSE OF GATHERING TOPOGRAPHIC INFORMATION/ MINIMAL BOUNDARY WAS LOCATED FOR THIS SURVEY.
7. REFERENCE COVER SHEET AND TREE LIST FOR ADDITIONAL INFORMATION.
8. LIMITS OF CONSTRUCTION ARE SHOWN ON THE "OVERALL SITE AND EROSION CONTROL PLAN" SHEET.

LICENSE AGREEMENT HAS BEEN REVIEWED AND APPROVED.
LICENSE AGREEMENT MUST BE RECORDED PRIOR TO ANY CONSTRUCTION ACTIVITY BY THE CITY OF AUSTIN.
LICENSE AGREEMENT RECORDATION

#_____

AUSTIN FIRE DEPARTMENT	
FIRE DESIGN CODES	N/A
FIRE FLOW DEMAND @ 20PSI	N/A
INTENDED USE	N/A
CONSTRUCTION CLASSIFICATION	N/A
BUILDING FIRE AREA	N/A
AUTOMATIC FIRE SPRINKLER SYSTEM TYPE (IF APPLICABLE)	N/A
REDUCED FIRE FLOW DEMAND @ 20PSI FOR SPRINKLER (IF APPLICABLE)	N/A
AFD FIRE HYDRANT FLOW TEST DATE	N/A
AFD FIRE HYDRANT FLOW TEST LOCATION	N/A
BUILDING HEIGHT & NO. STORIES	N/A
ALTERNATIVE METHOD OF COMPLIANCE AMOC (IF APPLICABLE)	N/A

SUBMITTED BY :

Amy Neskar 4/20/2023
AMY D. NESKAR, P.E.
LICENSED PROFESSIONAL ENGINEER NO. 126040
WGI, INC.
2021 EAST 5TH STREET, SUITE 200
AUSTIN, TEXAS 78702
512.669.5560

STATE OF TEXAS — AMY D. NESKAR — 126040 — LICENSED — PROFESSIONAL ENGINEER

I CERTIFY THAT THESE ENGINEERING DOCUMENTS ARE COMPLETE, ACCURATE AND ADEQUATE FOR THE INTENDED PURPOSES, INCLUDING CONSTRUCTION, BUT ARE NOT AUTHORIZED FOR CONSTRUCTION PRIOR TO FORMAL CITY APPROVAL.
THE PLAN IS COMPLETE, ACCURATE AND IN COMPLIANCE WITH CHAPTER 25-8 SUBCHAPTER A OF THE LAND DEVELOPMENT CODE.
[LDC 25-8-152]

APPROVED BY:

AUSTIN WATER UTILITY — DATE

AUSTIN FIRE DEPARTMENT — DATE

INDUSTRIAL WASTE — DATE

DIRECTOR OF DEVELOPEMT SERVICES DEPARTMENT — DATE

REVISIONS / CORRECTIONS							
NUMBER	DESCRIPTION	SHEET #'S REVISE (R) ADD (A) VOID (V)	SHEETS IN PLAN SET	NET CHANGE IMP. COVER (sq.ft.)	TOTAL SITE IMP. COVER (sq.ft.)/%	CITY OF AUSTIN APPROVAL DATE	DATE IMAGED

DEVELOPMENT PERMIT NUMBER

SITE PLAN APPROVAL — SHEET 01 OF 13
FILE NUMBER: 2022-050369 DA — APPLICATION DATE: MARCH 17, 2022
APPROVED BY COMMISSION ON _____ UNDER SECTION ____ OF CHAPTER ____ OF THE CITY OF AUSTIN CODE.
EXPIRATION DATE (25-5-81, LDC): _____ CASE MANAGER: _____

DIRECTOR, DEVELOPMENT SERVICES DEPARTMENT
RELEASED FOR GENERAL COMPLIANCE: _____ ZONING: _____
REV. 1:_____ CORRECTION 1:_____
REV. 2:_____ CORRECTION 2:_____
REV. 3:_____ CORRECTION 3:_____
FINAL PLAT MUST BE RECORDED BY THE PROJECT EXPIRATION DATE, IF APPLICABLE. SUBSEQUENT SITE PLANS WHICH DO NOT COMPLY WITH THE CODE CURRENT AT THE TIME OF FILING, AND ALL REQUIRED BUILDING PERMITS AND/OR A NOTICE OF CONSTRUCTION (IF A BUILDING PERMIT IS NOT REQUIRED), MUST ALSO BE APPROVED PRIOR TO THE PROJECT EXPIRATION DATE.

CITY APPROVAL STAMP

Texas811 — Know what's below. Call before you dig.

NOT AUTHORIZED FOR CONSTRUCTION PRIOR TO FORMAL CITY APPROVAL

FIRM NO: F-15985
WGI. WGInc.com
2021 EAST 5TH STREET, SUITE 200, AUSTIN, TEXAS, 78702
512.669.5560

EAST 3RD AND CONGRESS AVENUE
EAST 3RD AND CONGRESS AVENUE
CITY OF AUSTIN, TRAVIS COUNTY, TEXAS 78701
COVER SHEET

SHEET
C001
01 OF 13
2022-050369 DA

SAVED: 4/6/2023 9:51 AM
PLOTTED BY: DIEL GONZALEZ
DATE: 4/6/2023 9:51:13 AM
PLOTTED BY: DIEL GONZALEZ
DRAWING: U:\2022\050369.01\Congress Ponds\3-Civil\3-Site\EAST 3RD STREET\102277530.00 - C001 COVER SHEET.dwg

G F E D C B A

5 4 3 2 1

APPENDIX P-4: SEQUENCE OF CONSTRUCTION:

THE FOLLOWING SEQUENCE OF CONSTRUCTION SHALL BE USED FOR ALL DEVELOPMENT. THE APPLICANT IS ENCOURAGED TO PROVIDE ANY ADDITIONAL DETAILS APPROPRIATE FOR THE PARTICULAR DEVELOPMENT.

1. TEMPORARY EROSION AND SEDIMENTATION CONTROLS ARE TO BE INSTALLED AS INDICATED ON THE APPROVED SITE PLAN OR SUBDIVISION CONSTRUCTION PLAN AND IN ACCORDANCE WITH THE EROSION SEDIMENTATION CONTROL PLAN (ESC) AND STORMWATER POLLUTION PREVENTION PLAN (SWPPP) THAT IS REQUIRED TO BE POSTED ON THE SITE. INSTALL TREE PROTECTION, INITIATE TREE MITIGATION MEASURES AND CONDUCT "PRE - CONSTRUCTION" TREE FERTILIZATION (IF APPLICABLE).

2. THE ENVIRONMENTAL PROJECT MANAGER OR SITE SUPERVISOR MUST CONTACT THE DEVELOPMENT SERVICES DEPARTMENT, ENVIRONMENTAL INSPECTION, AT 512-974-2278, 72 HOURS PRIOR TO THE SCHEDULED DATE OF THE REQUIRED ON-SITE PRECONSTRUCTION MEETING.

3. THE ENVIRONMENTAL PROJECT MANAGER, AND/OR SITE SUPERVISOR, AND/OR DESIGNATED RESPONSIBLE PARTY, AND THE GENERAL CONTRACTOR WILL FOLLOW THE EROSION SEDIMENTATION CONTROL PLAN (ESC) AND STORM WATER POLLUTION PREVENTION PLAN (SWPPP) POSTED ON THE SITE. TEMPORARY EROSION AND SEDIMENTATION CONTROLS WILL BE REVISED, IF NEEDED, TO COMPLY WITH CITY INSPECTORS' DIRECTIVES, AND REVISED CONSTRUCTION SCHEDULE RELATIVE TO THE WATER QUALITY PLAN REQUIREMENTS AND THE EROSION PLAN.

4. ROUGH GRADE THE POND(S) AT 100% PROPOSED CAPACITY. EITHER THE PERMANENT OUTLET STRUCTURE OR A TEMPORARY OUTLET MUST BE CONSTRUCTED PRIOR TO DEVELOPMENT OF EMBANKMENT OR EXCAVATION THAT LEADS TO PONDING CONDITIONS. THE OUTLET SYSTEM MUST CONSIST OF A SUMP PIT OUTLET AND AN EMERGENCY SPILLWAY MEETING THE REQUIREMENTS OF THE DRAINAGE CRITERIA MANUAL AND/OR THE ENVIRONMENTAL CRITERIA MANUAL, AS REQUIRED. THE OUTLET SYSTEM SHALL BE PROTECTED FROM EROSION AND SHALL BE MAINTAINED THROUGHOUT THE COURSE OF CONSTRUCTION UNTIL INSTALLATION OF THE PERMANENT WATER QUALITY POND(S).

5. TEMPORARY EROSION AND SEDIMENTATION CONTROLS WILL BE INSPECTED AND MAINTAINED IN ACCORDANCE WITH THE EROSION SEDIMENTATION CONTROL PLAN (ESC) AND STORM WATER POLLUTION PREVENTION PLAN (SWPPP) POSTED ON THE SITE.

6. BEGIN SITE CLEARING/CONSTRUCTION (OR DEMOLITION) ACTIVITIES.

7. PERMANENT WATER QUALITY PONDS OR CONTROLS WILL BE CLEANED OUT AND FILTER MEDIA WILL BE INSTALLED PRIOR TO/CONCURRENTLY WITH REVEGETATION OF SITE.

8. COMPLETE CONSTRUCTION AND START REVEGETATION OF THE SITE AND INSTALLATION OF LANDSCAPING.

9. UPON COMPLETION OF THE SITE CONSTRUCTION AND REVEGETATION OF A PROJECT SITE, THE DESIGN ENGINEER SHALL SUBMIT AN ENGINEER'S LETTER OF CONCURRENCE BEARING THE ENGINEER'S SEAL, SIGNATURE, AND DATE TO THE DEVELOPMENT SERVICES DEPARTMENT INDICATING THAT CONSTRUCTION, INCLUDING REVEGETATION, IS COMPLETE AND IN SUBSTANTIAL COMPLIANCE WITH THE APPROVED PLANS. AFTER RECEIVING THIS LETTER, A FINAL INSPECTION WILL BE SCHEDULED BY THE APPROPRIATE CITY INSPECTOR.

10. UPON COMPLETION OF LANDSCAPE INSTALLATION OF A PROJECT SITE, THE LANDSCAPE ARCHITECT SHALL SUBMIT A LETTER OF CONCURRENCE TO THE DEVELOPMENT SERVICES DEPARTMENT INDICATING THAT THE REQUIRED LANDSCAPING IS COMPLETE AND IN SUBSTANTIAL CONFORMITY WITH THE APPROVED PLANS. AFTER RECEIVING THIS LETTER, A FINAL INSPECTION WILL BE SCHEDULED BY THE APPROPRIATE CITY INSPECTOR.

11. AFTER A FINAL INSPECTION HAS BEEN CONDUCTED BY THE CITY INSPECTOR AND WITH APPROVAL FROM THE CITY INSPECTOR, REMOVE THE TEMPORARY EROSION AND SEDIMENTATION CONTROLS AND COMPLETE ANY NECESSARY FINAL REVEGETATION RESULTING FROM REMOVAL OF THE CONTROLS. CONDUCT ANY MAINTENANCE AND REHABILITATION OF THE WATER QUALITY PONDS OR CONTROLS.

CITY OF AUSTIN GENERAL CONSTRUCTION NOTES:

1. ALL RESPONSIBILITY FOR THE ADEQUACY OF THESE PLANS REMAINS WITH THE ENGINEER WHO PREPARED THEM. IN REVIEWING THESE PLANS, THE CITY OF AUSTIN MUST RELY ON THE ADEQUACY OF THE WORK OF THE DESIGN ENGINEER.
2. CONTRACTOR SHALL CALL TEXAS 811 (811 OR 1-800-344-8377) FOR UTILITY LOCATIONS PRIOR TO ANY WORK IN CITY EASEMENTS OR STREET R.O.W.
3. CONTRACTOR SHALL NOTIFY THE CITY OF AUSTIN – SITE & SUBDIVISION DIVISION TO SUBMIT REQUIRED DOCUMENTATION, PAY CONSTRUCTION INSPECTION FEES, AND TO SCHEDULE THE REQUIRED SITE AND SUBDIVISION PRE-CONSTRUCTION MEETING. THIS MEETING MUST BE HELD PRIOR TO ANY CONSTRUCTION ACTIVITIES WITHIN THE R.O.W. OR PUBLIC EASEMENTS. PLEASE VISIT HTTP://AUSTINTEXAS.GOV/PAGE/COMMERCIAL-SITE-AND-SUBDIVISION-INSPECTIONS FOR A LIST OF SUBMITTAL REQUIREMENTS, INFORMATION CONCERNING FEES, AND CONTACT INFORMATION.
4. FOR SLOPES OR TRENCHES GREATER THAN FIVE FEET IN DEPTH, A NOTE MUST BE ADDED STATING: "ALL CONSTRUCTION OPERATIONS SHALL BE ACCOMPLISHED IN ACCORDANCE WITH APPLICABLE REGULATIONS OF THE U.S. OCCUPATIONAL SAFETY AND HEALTH ADMINISTRATION." (OSHA STANDARDS MAY BE PURCHASED FROM THE GOVERNMENT PRINTING OFFICE; INFORMATION AND RELATED REFERENCE MATERIALS MAY BE PURCHASED FROM OSHA, 611 EAST 6TH STREET, AUSTIN TEXAS.)
5. ALL SITE WORK MUST ALSO COMPLY WITH ENVIRONMENTAL REQUIREMENTS.
6. UPON COMPLETION OF THE PROPOSED SITE IMPROVEMENTS AND PRIOR TO THE FOLLOWING, THE ENGINEER SHALL CERTIFY IN WRITING THAT THE PROPOSED DRAINAGE, FILTRATION AND DETENTION FACILITIES WERE CONSTRUCTED IN CONFORMANCE WITH THE APPROVED PLANS:

   RELEASE OF THE CERTIFICATE OF OCCUPANCY BY THE DEVELOPMENT SERVICES DEPARTMENT (INSIDE THE CITY LIMITS);

   OR

   INSTALLATION OF AN ELECTRIC OR WATER METER (IN THE FIVE-MILE ETJ)

DEVELOPER INFORMATION:

ENTITY:	HPI REAL ESTATE MANAGEMENT, INC.	
CONTACT:	RUTH ST. JAMES	PHONE #: (512) 320-4141
ADDRESS:	301 CONGRESS AVENUE, SUITE 135	
	AUSTIN, TEXAS 78701	

LANDOWNER INFORMATION:

OWNER:	PR301 CONGRESS LP	PHONE #: (512) 320-4141
FIRM:	HPI REAL ESTATE MANAGEMENT, INC.	
CONTACT:	RUTH ST. JAMES	
OWNER ADDRESS:	7 GIRALDA FARMS	
	MADISON, NEW JERSEY 07940	

OWNERS REPRESENTATIVE RESPONSIBLE FOR PLAN ALTERATIONS:

CONTACT: AMY NESKAR, P.E. PHONE #: (512) 669-5560

PERSON OR FIRM RESPONSIBLE FOR EROSION/SEDIMENTATION CONTROL MAINTENANCE:

CONTACT: RUTH ST. JAMES PHONE #: (512) 320-4141

PERSON OR FIRM RESPONSIBLE FOR TREE/NATURAL AREA PROTECTION MAINTENANCE:

CONTACT: RUTH ST. JAMES PHONE #: (512) 320-4141

NOTE: SOME ABBREVIATIONS LISTED BELOW ARE NOT USED IN THIS PLAN SET.

AC	ACRE
APPROX	APPROXIMATELY
ASPH	ASPHALT
BGN	BEGIN
BOC	BACK OF CURB
BVCE	VERTICAL TANGENT CURVE INTERSECT ELEVATION
BVCS	VERTICAL TANGENT CURVE INTERSECT STATION
CO	CLEAN-OUT
COA / C.O.A.	CITY OF AUSTIN
CONC	CONCRETE
CWQZ	CRITICAL WATER QUALITY ZONE
DIA	DIAMETER
E	ELECTRIC
E:	EASTING
ELEV	ELEVATION
EOP	EDGE OF PAVEMENT
ESC	EROSION & SEDIMENTATION CONTROL
EXIST	EXISTING
FD	FILTER DIKE
FF / FFE	FINISHED FLOOR ELEVATION
FG	FINISHED GRADE
FH	FIRE HYDRANT
FL	FLOW LINE
FM	FORCE MAIN
FND	FOUND
FO	FIBER OPTIC
FOC	FACE OF CURB
FP	FLOOD PLAIN
G	GUTTER
GRND	GROUND
GW	FINISHED GRADE AT WALL
HDPE	HIGH-DENSITY POLYETHYLENE
HORIZ	HORIZONTAL
HP	HIGH POINT
HT	HEIGHT
INFO	INFORMATION
IP	STORM INLET PROTECTION
IR	IRON ROD
LAT	LATERAL
LF	LINEAR FEET
LOC	LIMITS OF CONSTRUCTION
LP	LOW POINT
LT	LEFT
LUP	LAND USE PLAN
MEP	MECHANICAL, ELECTRICAL & PLUMBING
MH	MANHOLE
MIN	MINIMUM
N:	NORTHING
NO	NUMBER
NTS / N.T.S.	NOT TO SCALE
OC	ON CENTER (℄ TO ℄)
O/S	OFFSET
OU	OVERHEAD UTILITY
P	PIPELINE
PC	TANGENT - CURVE INTERSECTION
PCC	POINT OF CURVE INTERSECT
PG	PAGE
PI	TANGENT - TANGENT INTERSECTION
POB	POINT OF BEGINNING
PROP	PROPOSED
PT	CURVE - TANGENT INTERSECTION
PVC	POLYVINYL CHLORIDE
PVMT	PAVEMENT
R	RADIUS
RB	ROCK BERM
RCP	REINFORCED CONCRETE PIPE
REF	REFERENCE
RIM	TOP OF MANHOLE LID ELEVATION
ROW	R.O.W. - RIGHT OF WAY
RSGV	RESILIENT SEAT GATE VALVE
RT	RIGHT
SD	STORM DRAIN
SF	SILT FENCE
SHT	SHEET
SHTS	SHEETS
SQ. FT.	SQUARE FEET
STA	STATION
STM / SD	STORM DRAIN
T	TELEPHONE
TBM	TEMPORARY BENCHMARK
TC	TOP OF CURB
Tc	TIME OF CONCENTRATION
TM	TOP OF MEDIA
TP	TREE PROTECTION
TW	TOP OF WALL
TYP	TYPICAL
UE	UNDERGROUND ELECTRIC
UNK	UNKNOWN
UT	UNDERGROUND TELEPHONE
VERT	VERTICAL
VOL	VOLUME
W	WATER
WL	WATER LINE
W/	WITH
WM	WATER METER
WQTZ	WATER QUALITY TRANSITION ZONE
WSE	WATER SURFACE ELEVATION
WV	WATER VALVE
WW	WASTEWATER
YR	YEAR

SITE PLAN APPROVAL SHEET 02 OF 13
FILE NUMBER: 2022-050369 DA APPLICATION DATE: MARCH 17, 2022
APPROVED BY COMMISSION ON __________ UNDER SECTION ____ OF CHAPTER ____ OF THE CITY OF AUSTIN CODE.
EXPIRATION DATE (25-5-81, LDC): __________ CASE MANAGER: ____________________

____
DIRECTOR, DEVELOPMENT SERVICES DEPARTMENT
RELEASED FOR GENERAL COMPLIANCE: __________ ZONING: _________
REV. 1:____________________ CORRECTION 1:____________________
REV. 2:____________________ CORRECTION 2:____________________
REV. 3:____________________ CORRECTION 3:____________________
FINAL PLAT MUST BE RECORDED BY THE PROJECT EXPIRATION DATE, IF APPLICABLE. SUBSEQUENT SITE PLANS WHICH DO NOT COMPLY WITH THE CODE CURRENT AT THE TIME OF FILING, AND ALL REQUIRED BUILDING PERMITS AND/OR A NOTICE OF CONSTRUCTION (IF A BUILDING PERMIT IS NOT REQUIRED), MUST ALSO BE APPROVED PRIOR TO THE PROJECT EXPIRATION DATE.

NOT AUTHORIZED FOR CONSTRUCTION PRIOR TO FORMAL CITY APPROVAL

FIRM NO: F-15085
WGI®
WGInc.com
512.669.5560
2021 EAST 5TH STREET, SUITE 200, AUSTIN, TEXAS, 78702

STATE OF TEXAS
AMY D. NESKAR
126040
LICENSED
PROFESSIONAL ENGINEER
4/20/23

EAST 3RD AND CONGRESS AVENUE
EAST 3RD AND CONGRESS AVENUE
CITY OF AUSTIN, TRAVIS COUNTY, TEXAS 78701

GENERAL CONSTRUCTION NOTES

CITY APPROVAL STAMP

SHEET
C002
02 OF 13
2022-050369 DA

SAVED: 4/14/2023 10:26 AM
PLOT DATE: 4/14/2023 10:33 AM
PLOTTED BY: ONIEL GONZALEZ
DRAWING: P:\7700\7730.00 301 Congress Porch\01-Civil\10-Shts\EAST 3RD STREET\30227730.00 - C002 GENERAL NOTES.dwg

GENERAL NOTES

ALL RESPONSIBILITY FOR THE ADEQUACY OF THESE PLANS REMAINS WITH THE ENGINEER. APPROVAL OF THESE PLANS BY THE CITY OF AUSTIN DOES NOT REMOVE THESE RESPONSIBILITIES.

"REVIEWED BY AUSTIN WATER" APPLIES ONLY TO FACILITIES WITHIN PUBLIC STREETS OR PUBLIC UTILITY EASEMENTS. ALL OTHER WATER AND WASTEWATER FACILITIES INSIDE PRIVATE PROPERTY ARE UNDER THE JURISDICTION OF BUILDING INSPECTIONS.

USE OF ELECTRONIC FILES GENERAL DISCLAIMER: USE OF THE ATTACHED FILES IN ANY MANNER INDICATES YOUR ACCEPTANCE OF TERMS AND CONDITIONS AS SET FORTH BELOW. IF YOU DO NOT AGREE TO ALL OF THE TERMS AND CONDITIONS, PLEASE CONTACT AUSTIN WATER PIPELINE ENGINEERING, PROJECT COORDINATOR PRIOR TO USE OF THE REFERENCED INFORMATION. PLEASE BE ADVISED THAT THE ATTACHED FILES ARE IN A FORMAT THAT CAN BE ALTERED BY THE USER. DUE TO THIS FACT, ANY REUSE OF THE DATA WILL BE AT THE USER'S SOLE RISK WITHOUT LIABILITY OR LEGAL EXPOSURE TO THE CITY OF AUSTIN AND USER SHALL INDEMNIFY AND HOLD HARMLESS THE CITY OF AUSTIN FROM ALL CLAIMS, DAMAGES, LOSSES AND EXPENSES INCLUDING ATTORNEY'S FEES ARISING OUT OF OR RESULTING FROM USING THE DIGITAL FILE. IN ADDITION, IT IS THE RESPONSIBILITY OF THE USER TO COMPARE ALL DATA WITH THE PDF VERSION OF THIS DRAWING. IN THE EVENT THERE IS A CONFLICT BETWEEN THE PDF VERSION DRAWING AND THE ELECTRONIC FILE, THE PDF VERSION DRAWING SHALL PREVAIL.

FIRE FLOW TEST DATA

FIRE FLOW TEST ORDERED 04.13.2023 AND WILL BE PROVIDED UPON ARRIVAL.

REFERENCE #16791469

FIRE FLOW MAP

GENERAL NOTES

AUTOMATED METERING INFRASTRUCTURE: EFFECTIVE MARCH 2022, NEW WATER METERS INSTALLED SHALL BE IN CONFORMANCE WITH AW'S AUTOMATED METERING INFRASTRUCTURE TECHNOLOGY, AND WITH THE APPLICABLE STANDARD PRODUCT LIST. APPLICANTS FILING A SITE PLAN OR SUBDIVISION PLAN WILL BE REQUIRED TO COORDINATE WITH THE AUSTIN WATER PLAN REVIEWER FOR DETAILS ON APPROVAL AND INSTALLATION.

PRIOR TO THE HANDLING AND DISPOSAL OF ASBESTOS PIPE, THE CONTRACTOR'S WORK PLANS WILL BE REVIEWED AND COORDINATED THROUGH AUSTIN WATER'S ASBESTOS PROGRAM MANAGER WHO CAN BE REACHED AT 512-972-0915. IT IS THE CONTRACTOR'S RESPONSIBILITY TO UTILIZE A TRAINED, CERTIFIED AND LICENSED ASBESTOS ABATEMENT CONTRACTOR IN ACCORDANCE WITH THE FEDERAL, STATE AND LOCAL REGULATIONS.

MODIFICATIONS TO AUSTIN WATER SIGNED AND STAMPED SHEETS ARE NOT PERMITTED. ALL DESIGN MODIFICATIONS WILL NEED TO BE SUBMITTED VIA THE ABC PORTAL FOR A PLAN CORRECTION OR REVISION. ALL UNETHICAL ENGINEERING PRACTICES, INCLUDING MODIFYING CITY STAMPED PLAN SHEETS, SHALL BE REPORTED TO THE TEXAS BOARD OF PROFESSIONAL ENGINEERS AND LAND SURVEYORS (PELS).
REFERENCE: TEXAS ENGINEERING PRACTICE ACT AND RULES, SUBCHAPTER C: PROFESSIONAL CONDUCT AND ETHICS

PROJECT INFORMATION[1]

FIRE, DOMESTIC AND IRRIGATION DEMAND DATA	
GRID NUMBER:	J22
MAPSCO NUMBER:	585W
AW INTERSECTION NUMBER:	156206.000, 156316.000, 0.000
BUILDING SIZE IN SQUARE FEET:	420,000 SF
BUILDING TYPE PER IFC:	1-A
BUILDING HEIGHT:	310 Ft
AVAILABLE FIRE FLOW CALCS AT 20 PSI:	TBD
REQUIRED BUILDING FIRE FLOW PER IFC:	N/A
REDUCED FIRE FLOW PER __% FIRE SPRINKLER REDUCTION PER IFC TABLE B105.2:	N/A
MINIMUM FIRE FLOW (SEE NOTE #2 BELOW):	N/A
DOMESTIC WATER DEMAND IN GPM:	N/A
WATER SUPPLY FIXTURE UNITS (WSFU) FLUSH TANKS OR FLUSHOMETERS (CIRCLE APPLICABLE ITEM):	N/A
AUSTIN WATER PRESSURE ZONE:	CENTRAL
STATIC WATER PRESSURE IN PSI:	TBD
STATIC PRESSURE AT THE HIGHEST LOT SERVED IN PSI:	TBD
STATIC PRESSURE AT THE LOWEST LOT SERVED IN PSI:	TBD
MAXIMUM IRRIGATION DEMAND:	14 GPM
FIRE LINE VELOCITY: ___SIZE OF FIRE LINE	N/A
DOMESTIC LINE VELOCITY: ___SIZE OF DOMESTIC LINE	N/A
LIVING UNIT EQUIVALENTS: (LUEs)	N/A

NOTE: LOTS WITH 65 PSI OR GREATER REQUIRE A PRV TO BE INSTALLED ON THE PROPERTY OWNERS SIDE OF THE DOMESTIC WATER METER.

1. WITH THE EXCEPTION OF PROVIDING THE REQUIRED INFORMATION, DO NOT REVISE THESE TABLES IN ANYWAY.

2. MIN FIRE FLOW: DESIGN ENGINEER MUST INDICATE VALUES WHICH COMPLY WITH IFC TABLES B105.1(2) OR B105.2 (REQUIRED OR REDUCED FIRE FLOWS). MIN FIRE FLOW VALUE SHALL BE NO LESS THAN 1000 GPM FOR NFPA 13 SYSTEMS OR 1500 GPM FOR NFPA 13R SYSTEMS (FOOTNOTES a and b FOR TABLE B105.2).

3. IF DEMAND, OTHER THAN MINIMUM FIRE FLOW, IS UTILIZED IN FIRE LINE VELOCITY DETERMINATION, ENGINEERING JUSTIFICATION SHALL BE SHOWN ON THIS SHEET WITH APPLICABLE DATA AND CALCULATIONS.

Meter Notice:

Meter 1.5 inches and larger must be purchased and ordered 90 days in advance of installation.

Meter(s) Requirement for Project:
Address: 301 CONGRESS AVENUE
Proposed Use: IRRIGATION
Type: POSITIVE DISPLACEMENT
Size: 3/4" **GPM Range: 2-30**
Service Units: 1.5

Meter(s) Requirement for Project:
Address:
Proposed Use:
Type:
Size: **GPM Range:**
Service Units:

Reclaimed Meter(s) Requirement for Project:
Address:
Proposed Use:
Type:
Size: **GPM Range:**

INSPECTION NOTES

PLEASE CONTACT DEVELOPMENT SERVICES DEPARTMENT, SITE AND SUBDIVISION INSPECTION AT SITESUBINTAKE@AUSTINTEXAS.GOV FOR ARRANGEMENTS FOR PAYMENT OF INSPECTION FEES AND JOB ASSIGNMENT FOR INSPECTION OF THE PUBLIC UTILITIES TO THIS SITE. INSPECTION FEES MUST BE PAID BEFORE ANY PRE-CONSTRUCTION MEETING CAN BE HELD.

STANDARD CONSTRUCTION NOTES October 1, 2021

1. THE CITY STANDARD CONSTRUCTION SPECIFICATIONS CURRENT AT THE TIME OF BIDDING SHALL COVER MATERIALS AND METHODS USED TO DO THIS WORK.
2. CONTRACTOR MUST OBTAIN A ROW PERMIT FROM AUSTIN TRANSPORTATION DEPT, RIGHT OF WAY MANAGEMENT DIVISION BEFORE BEGINNING CONSTRUCTION WITHIN THE RIGHT-OF-WAY OF A PUBLIC STREET OR ALLEY. ACTIVITY WITHIN RIGHT-OF-WAY SHALL COMPLY WITH APPROVED TCP.
3. AT LEAST 48 HOURS PRIOR TO BEGINNING ANY UTILITY CONSTRUCTION ACTIVITY IN PUBLIC ROW OR PUBLIC EASEMENT, THE CONTRACTOR SHALL NOTIFY THE APPLICABLE CITY OF AUSTIN INSPECTION GROUP (AUSTIN TRANSPORTATION, DEVELOPMENT SERVICES, OR PUBLIC WORKS). SEE CURRENT NOTIFICATION REQUIREMENTS AT WWW.AUSTINTEXAS.GOV.
4. THE CONTRACTOR SHALL CONTACT THE AUSTIN AREA "ONE CALL" SYSTEM AT 1-800-344-8377 FOR EXISTING UTILITY LOCATIONS PRIOR TO ANY EXCAVATION IN ADVANCE OF CONSTRUCTION. THE CONTRACTOR SHALL VERIFY THE LOCATIONS OF ALL UTILITIES TO BE EXTENDED, TIED TO, OR ALTERED, OR SUBJECT TO DAMAGE/INCONVENIENCE BY THE CONSTRUCTION OPERATIONS. THE CITY OF AUSTIN WATER AND WASTEWATER MAINTENANCE RESPONSIBILITY ENDS AT R.O.W./EASEMENT LINES.
5. NO OTHER UTILITY SERVICE/APPURTENANCES SHALL BE PLACED NEAR THE PROPERTY LINE, OR OTHER ASSIGNED LOCATION DESIGNATED FOR WATER AND WASTEWATER UTILITY SERVICE THAT WOULD INTERFERE WITH THE WATER AND WASTEWATER SERVICES.
6. MINIMUM TRENCH SAFETY MEASURES SHALL BE PROVIDED, AS REQUIRED BY OSHA, CITY SPECIFICATION 509S, AND CITY/COUNTY CONSTRUCTION INSPECTORS.
7. ALL MATERIALS TESTS ORDERED BY THE OWNER FOR QUALITY ASSURANCE PURPOSES, SHALL BE CONDUCTED BY AN INDEPENDENT LABORATORY AND FUNDED BY THE OWNER IN ACCORDANCE WITH CITY STANDARD SPECIFICATION ITEM 1804S.04.
8. PRESSURE TAPS SHALL BE ALLOWED ON A CASE BY CASE BASIS, AS DETERMINED BY THE DIRECTOR'S DESIGNEE. NORMALLY PRESSURE TAPS 4 INCHES AND LARGER SHALL BE ALLOWED IN THE FOLLOWING CASES: A) A TEST SHUT OUT INDICATES AN ADEQUATE SHUT OUT TO PERFORM THE WORK IS NOT FEASIBLE B) MORE THAN 30 CUSTOMERS OR A SINGLE CRITICAL CUSTOMER (AS DEFINED BY AUSTIN WATER) WOULD BE IMPACTED BY THE SHUT OUT OR C) THE EXISTING WATER LINE WARRANTS IT.
9. WATER LINE TESTING AND STERILIZATION SHALL BE PERFORMED IN ACCORDANCE WITH CITY STANDARD SPECIFICATION ITEMS 510.3 (27)-(29). FORCE MAIN PRESSURE TESTING SHALL BE CONDUCTED AND FALL UNDER THE SPECIFICATIONS AS WATER LINES (PRESSURE PIPE) OR AT THE PRESSURES SHOWN ON THE APPROVED PLANS.
10. ALL MATERIAL USED ON THIS PROJECT MUST BE LISTED ON THE STANDARD PRODUCTS LISTING. ANY MATERIAL NOT LISTED HAS TO GO THROUGH THE REVIEW OF THE STANDARDS COMMITTEE FOR REVIEW AND APPROVAL PRIOR TO START OF PROJECT. TESTING AND EVALUATION OF PRODUCTS ARE REQUIRED BEFORE APPROVAL WILL BE GIVEN ANY CONSIDERATION.
11. WHEN WATER SERVICES ARE DAMAGED AND THE SERVICE MATERIAL IS POLYETHYLENE (PE), THE LINE SHALL BE REPAIRED ONLY BY HEAT FUSION WELD, AT BRASS FITTINGS, OR THE FULL LENGTH SHALL BE REPLACED PER CURRENT STANDARD DETAIL(S). WHEN POLYBUTYLENE (PB) TUBING IS DAMAGED OR TAMPERED WITH IN ANY WAY, THE FULL LENGTH OF SERVICE LINE SHALL BE REPLACED. (NOTE: FULL LENGTH IS FROM THE CORPORATION STOP TO THE METER.) REPAIR COUPLINGS ARE NOT ALLOWED FOR ANY WATER OR WASTEWATER SERVICE LINE REPAIR, RECONNECT, OR REPLACEMENT.
12. WHEN AN EXISTING WATERLINE SHUT OUT IS NECESSARY AND POSSIBLE, THE CONTRACTOR SHALL NOTIFY THE CONSTRUCTION INSPECTOR WHO WILL THEN NOTIFY AUSTIN WATER DISPATCH AND THE AFFECTED CUSTOMERS A MINIMUM OF FORTY-EIGHT (48) HOURS IN ADVANCE.
13. THE CONTRACTOR SHALL NOTIFY THE CONSTRUCTION INSPECTOR SO THAT HE CAN NOTIFY THE AUSTIN WATER AT 972-0000 AT A MINIMUM OF 72 HOURS PRIOR TO RELOCATING ANY DOMESTIC OR FIRE DEMAND WATER METERS. THE CONTRACTOR SHALL CAREFULLY REMOVE ALL METERS AND METERS BOXES THAT ARE INDICATED TO BE RELOCATED OR SALVAGED. THE CONTRACTOR SHALL INSTALL THE REMOVED METER OR CITY PROVIDED METER AT THE NEW LOCATION INDICATED ON THE CONSTRUCTION PLANS.
14. THE CONTRACTOR SHALL VERIFY ALL VERTICAL AND HORIZONTAL LOCATIONS OF EXISTING UTILITIES, BELOW GROUND AND OVERHEAD, PRIOR TO STARTING ONSITE UTILITY WORK.
15. ALL WATER, WASTEWATER, AND RECLAIMED MAINS SHALL BE INSTALLED IN ACCORDANCE WITH THE SEPARATION DISTANCES INDICATED ON THE PLANS, PER UTILITY CRITERIA MANUAL AND TCEQ CHAPTERS 210, 217, AND 290.
16. PROJECT-SPECIFIC SHOP DRAWINGS SHALL BE SUBMITTED FOR AW APPROVAL FOR PRE-CAST CIRCULAR VERTICAL MANHOLE SECTIONS LARGER THAN 48" DIAMETER. THE SHOP DRAWINGS SHALL INCLUDE THE FLOWLINE ELEVATION OF ALL CONNECTING PIPES; ELEVATIONS OF TRANSITIONS FROM LARGE DIAMETER SECTIONS TO 48" DIAMETER SECTIONS; TOP OF MANHOLE AND SURROUNDING GROUND ELEVATIONS; AND DETAILS OF SPECIAL CONSTRUCTION CONSIDERATIONS SPECIFIED IN THE CONTRACT DOCUMENTS.
17. WHEN CONCRETE MANHOLES LARGER THAN 48 INCH DIAMETER ARE USED, DRAWINGS THAT ARE SEALED BY A PROFESSIONAL ENGINEER SHALL BE SUBMITTED FOR BASE SLABS, FLAT TOP LIDS (IF USED), AND FLAT TYPE CONCRETE PIECES USED TO TRANSITION FROM LARGER TO SMALLER DIAMETER MANHOLE SECTIONS.
18. ALL FIRE HYDRANTS AND VALVES THAT ARE TO BE ABANDONED SHALL BE REMOVED, SALVAGED AND RETURNED TO AUSTIN WATER. NOTICE SHOULD BE GIVEN 48 HOURS PRIOR, TO PIPELINE OPERATIONS DISTRIBUTION SYSTEM -VALVES AND HYDRANT SERVICES SUPERVISOR AT 512-972-1280.
19. ALL EXISTING WATER METERS IDENTIFIED TO BE RELOCATED OR ABANDONED AT THE DEVELOPMENT SHALL BE REMOVED FROM THE METER BOX PRIOR TO CONSTRUCTION AND GIVEN IMMEDIATELY TO THE CITY OF AUSTIN INSPECTOR.
20. THE ENGINEER SHALL CALL OUT THE SIZE, TYPE AND USE (DOMESTIC OR IRRIGATION) OF ALL EXISTING WATER METERS TO BE RELOCATED OR REPURPOSED. WATER METER NUMBERS WILL NOT BE REQUIRED TO BE PLACED ON THE PLAN SHEET. A SEPARATE AUSTIN WATER TAPS OFFICE FORM WILL BE USED TO PROVIDE RELEVANT DATA FOR THE EXISTING INFORMATION ON EXISTING METERS TO RECEIVE APPROPRIATE CREDITS. THIS FORM SHALL BE DIRECTLY SUBMITTED TO AUSTIN WATER TAPS OFFICE FOR REVIEW AND PROCESSING.
21. NO CONNECTION MAY BE MADE BETWEEN THE PRIVATE PLUMBING AND AUSTIN WATER INFRASTRUCTURE UNTIL A CITY APPROVED WATER METER HAS BEEN INSTALLED.
22. METER BOXES AND CLEAN OUTS SHALL NOT BE LOCATED WITHIN PAVED AREAS SUCH AS DRIVEWAYS AND SIDEWALKS.

AW INFRASTRUCTURE INFORMATION

PROPOSED PRODUCT TYPE (TO BE INSTALLED)	LENGTH OF PIPE (L.F.)	SIZE OF PIPE (INCH)	NO. OF SERVICES
WATER MAIN			NA
WASTEWATER MAIN			NA
RECLAIMED WATER MAIN			NA
WATER SERVICE	30	3/4	1 (IRRIGATION)
WASTEWATER SERVICE	NA	NA	
RECLAIMED WATER SERVICE	NA	NA	

EXPAND OR REDUCE TABLE AS NEEDED*
THE INFORMATION INCLUDED IN THIS TABLE ARE APPROXIMATE
VALUES ESTIMATED BASED ON GENERAL ENGINEERING GUIDELINES

ADDITIONAL REVIEW ACKNOWLEDGEMENT

ONSITE WATER REUSE & AW RECLAIMED INFORMATION

DOES THIS DEVELOPMENT HAVE A TOTAL GROSS FLOOR BUILDING AREA OF 250,000 SQUARE FEET OR MORE? ■ YES ☐ NO

DISTANCE TO NEAREST EXISTING AW RECLAIMED MAIN? ☐ 250' OR LESS ☐ 251' TO 500' ■ GREATER THAN 500'

AUTOMATED METERING INFORMATION

IS THIS PROJECT WITHIN THE CURRENT SERVICE AREA OF AW'S DATA COLLECTION UNITS (DCUs)? ☐ YES ■ NO

DOES THIS PROJECT REQUIRE A DEDICATED EASEMENT FOR DCU INFRASTRUCTURE? ☐ YES ■ NO

AULCC REQUIREMENT

DOES THIS PROJECT REQUIRE AN AULCC REVIEW? ■ YES ☐ NO

IF YES, PLEASE PROVIDE UCC# 230119-01-01

AW EXPIRATION STAMP THREE YEARS FROM THE DATE OF SIGN-OFF

CITY OF AUSTIN
AUSTIN WATER
October 2021

AUSTIN WATER GENERAL INFORMATION AND CONSTRUCTION NOTES FOR COMMERCIAL SITES AND SUBDIVISION PLANS

VERSION 2.0
STANDARD NO.
1 OF 1

NOT AUTHORIZED FOR CONSTRUCTION PRIOR TO FORMAL CITY APPROVAL

FIRM NO: F-15085
WGI®
WGInc.com
2021 EAST 5TH STREET, SUITE 200, AUSTIN, TEXAS, 78702
512.669.5560

STATE OF TEXAS
AMY D. NESKAR
126040
LICENSED PROFESSIONAL ENGINEER
4/20/23

EAST 3RD AND CONGRESS AVENUE
EAST 3RD AND CONGRESS AVENUE
CITY OF AUSTIN, TRAVIS COUNTY, TEXAS 78701

AUSTIN WATER GENERAL INFO & CONST. NOTES

CITY APPROVAL STAMP

SHEET
C003
03 OF 13
2022-050369 DA

SAVED: 4/14/2023 10:26 AM
PLOT DATE: 4/14/2023 10:33 AM
PLOTTED BY: ONIEL GONZALEZ
DRAWING: P:\7700\7730.00 301 Congress Porch\01-Civil\10-Shts\EAST 3RD STREET\30227730.00 - C002 GENERAL NOTES.dwg

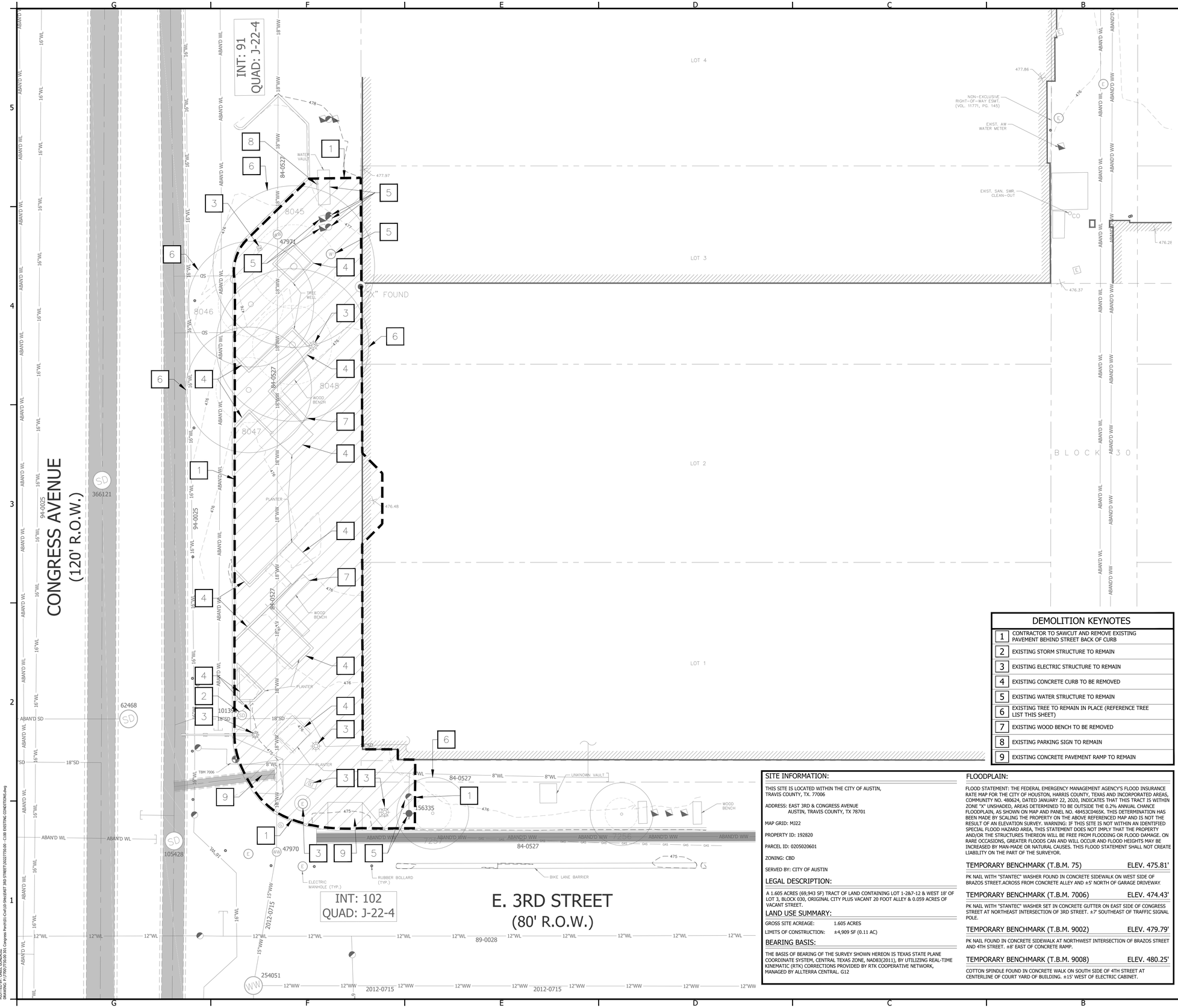

LEGEND

- BOUNDARY / RIGHT OF WAY
- EASEMENT / SETBACK
- LOC — LOC LIMITS OF CONSTRUCTION /DISTURBANCE
- CURB & GUTTER
- XXXX CONTOUR (GRADE) ELEV.
- STM STORM SEWER PIPE
- W — W WATER LINE
- WW WASTE WATER LINE
- FIRE LANE
- ADA ACCESSIBLE ROUTE (ADA)
- G — G UNDERGROUND GAS LINE
- OE OVERHEAD ELECTRIC
- GATE POST FENCE
- WOOD FENCE
- BENCHMARK
- UTILITY/POWER POLE
- METER POLE
- SAMPLE WELL/GREASE TRAP
- ROD/NAIL FOUND OR SET
- ELECTRIC MANHOLE
- TELEPHONE ENCLOSURE
- ELECTRIC/TELECOM BOX
- TELEPHONE CABLE MARKER
- LIGHT POLE
- SIGN
- WASTE WATER MANHOLE
- CLEAN-OUT
- WATER METER/VAULT
- FIRE HYDRANT
- WATER VALVE
- BLOWOFF VALVE
- STORM DRAIN MANHOLE
- STORM DRAINAGE INLET
- BFP BACKFLOW PREVENTER
- UV UTILITY VAULT

LEGEND-DEMO

REMOVE EXISTING DECORATIVE PAVERS (MATCH EXISTING GRADES IN NEW PAVER SECTION)

CAUTION:
CONTRACTOR TO VERIFY ALL EXISTING UTILITIES VERTICALLY AND HORIZONTALLY PRIOR TO CONSTRUCTION. CONTRACTOR TO NOTIFY THE ENGINEER IMMEDIATELY OF ANY DISCREPANCIES.

WARNING!
THE ENGINEER ASSUMES NO RESPONSIBILITY FOR THE ACCURACY OF THE LOCATION OF UNDERGROUND UTILITIES. THE CONTRACTOR SHALL BE RESPONSIBLE FOR AVOIDING ALL EXISTING UTILITIES BY CALLING TEXAS ONE CALL SYSTEM AT 811 FOR LOCATION OF ALL UTILITIES, AT LEAST 72 HOURS PRIOR TO BEGINNING CONSTRUCTION.

DEMOLITION KEYNOTES

1	CONTRACTOR TO SAWCUT AND REMOVE EXISTING PAVEMENT BEHIND STREET BACK OF CURB
2	EXISTING STORM STRUCTURE TO REMAIN
3	EXISTING ELECTRIC STRUCTURE TO REMAIN
4	EXISTING CONCRETE CURB TO BE REMOVED
5	EXISTING WATER STRUCTURE TO REMAIN
6	EXISTING TREE TO REMAIN IN PLACE (REFERENCE TREE LIST THIS SHEET)
7	EXISTING WOOD BENCH TO BE REMOVED
8	EXISTING PARKING SIGN TO REMAIN
9	EXISTING CONCRETE PAVEMENT RAMP TO REMAIN

SITE INFORMATION:

THIS SITE IS LOCATED WITHIN THE CITY OF AUSTIN, TRAVIS COUNTY, TX. 77006

ADDRESS: EAST 3RD & CONGRESS AVENUE
AUSTIN, TRAVIS COUNTY, TX 78701

MAP GRID: MJ22

PROPERTY ID: 192820

PARCEL ID: 0205020601

ZONING: CBD

SERVED BY: CITY OF AUSTIN

LEGAL DESCRIPTION:

A 1.605 ACRES (69,943 SF) TRACT OF LAND CONTAINING LOT 1-2&7-12 & WEST 18' OF LOT 3, BLOCK 030, ORIGINAL CITY PLUS VACANT 20 FOOT ALLEY & 0.059 ACRES OF VACANT STREET.

LAND USE SUMMARY:

GROSS SITE ACREAGE: 1.605 ACRES

LIMITS OF CONSTRUCTION: ±4,909 SF (0.11 AC)

BEARING BASIS:

THE BASIS OF BEARING OF THE SURVEY SHOWN HEREON IS TEXAS STATE PLANE COORDINATE SYSTEM, CENTRAL TEXAS ZONE, NAD83(2011), BY UTILIZING REAL-TIME KINEMATIC (RTK) CORRECTIONS PROVIDED BY RTK COOPERATIVE NETWORK, MANAGED BY ALLTERRA CENTRAL. G12

FLOODPLAIN:

FLOOD STATEMENT: THE FEDERAL EMERGENCY MANAGEMENT AGENCY'S FLOOD INSURANCE RATE MAP FOR THE CITY OF HOUSTON, HARRIS COUNTY, TEXAS AND INCORPORATED AREAS, COMMUNITY NO. 480624, DATED JANUARY 22, 2020, INDICATES THAT THIS TRACT IS WITHIN ZONE "X" UNSHADED, AREAS DETERMINED TO BE OUTSIDE THE 0.2% ANNUAL CHANCE FLOODPLAIN, AS SHOWN ON MAP AND PANEL NO. 48453C0465K. THIS DETERMINATION HAS BEEN MADE BY SCALING THE PROPERTY ON THE ABOVE REFERENCED MAP AND IS NOT THE RESULT OF AN ELEVATION SURVEY. WARNING: IF THIS SITE IS NOT WITHIN AN IDENTIFIED SPECIAL FLOOD HAZARD AREA, THIS STATEMENT DOES NOT IMPLY THAT THE PROPERTY AND/OR THE STRUCTURES THEREON WILL BE FREE FROM FLOODING OR FLOOD DAMAGE. ON RARE OCCASIONS, GREATER FLOODS CAN AND WILL OCCUR AND FLOOD HEIGHTS MAY BE INCREASED BY MAN-MADE OR NATURAL CAUSES. THIS FLOOD STATEMENT SHALL NOT CREATE LIABILITY ON THE PART OF THE SURVEYOR.

TEMPORARY BENCHMARK (T.B.M. 75) ELEV. 475.81'

PK NAIL WITH "STANTEC" WASHER FOUND IN CONCRETE SIDEWALK ON WEST SIDE OF BRAZOS STREET.ACROSS FROM CONCRETE ALLEY AND ±5' NORTH OF GARAGE DRIVEWAY.

TEMPORARY BENCHMARK (T.B.M. 7006) ELEV. 474.43'

PK NAIL WITH "STANTEC" WASHER SET IN CONCRETE GUTTER ON EAST SIDE OF CONGRESS STREET AT NORTHEAST INTERSECTION OF 3RD STREET. ±7' SOUTHEAST OF TRAFFIC SIGNAL POLE.

TEMPORARY BENCHMARK (T.B.M. 9002) ELEV. 479.79'

PK NAIL FOUND IN CONCRETE SIDEWALK AT NORTHWEST INTERSECTION OF BRAZOS STREET AND 4TH STREET. ±8' EAST OF CONCRETE RAMP.

TEMPORARY BENCHMARK (T.B.M. 9008) ELEV. 480.25'

COTTON SPINDLE FOUND IN CONCRETE WALK ON SOUTH SIDE OF 4TH STREET AT CENTERLINE OF COURT YARD OF BUILDING. ±15' WEST OF ELECTRIC CABINET.

NOTES:

1. CONTRACTOR TO FIELD VERIFY UTILITIES AS REQUIRED. CITY OF AUSTIN GIS WAS USED TO DELINEATE EXISTING UTILITIES ALIGNMENTS AND SHOULD ONLY BE REFERENCED AS AN APPROXIMATION ONLY.
2. EROSION/SEDIMENTATION CONTROL AND TREE PROTECTION MUST BE INSTALLED PRIOR TO ANY DEMOLITION.
3. THE CONTRACTOR IS SPECIFICALLY CAUTIONED THAT THE LOCATION AND/OR ELEVATION OF EXISTING UTILITIES AND STRUCTURES AS SHOWN ON THESE PLANS IS BASED ON RECORDS OF VARIOUS UTILITY COMPANIES AND WHERE POSSIBLE, MEASUREMENTS TAKEN IN THE FIELD. THIS INFORMATION IS NOT TO BE RELIED ON AS BEING EXACT OR COMPLETE. THE LOCATION OF ALL UNDERGROUND UTILITIES AND STRUCTURES SHALL BE VERIFIED IN THE FIELD PRIOR TO THE START OF CONSTRUCTION, THE CONTRACTOR MUST CONTACT THE APPROPRIATE UTILITY COMPANY, ANY GOVERNING PERMITTING AUTHORITY, AND "DIG TEST" AT LEAST 72 HOURS PRIOR TO ANY EXCAVATION WORK TO REQUEST EXACT FIELD LOCATION OF UTILITIES INTERFERING WITH THE PROPOSED CONSTRUCTION AND APPROPRIATE REMEDIAL ACTION TAKEN BEFORE PROCEEDING WITH THE WORK. IT SHALL BE THE RESPONSIBILITY OF THE CONTRACTOR TO RELOCATE ALL EXISTING UTILITIES WHICH CONFLICT WITH THE PROPOSED IMPROVEMENTS SHOWN ON THE PLAN PER THE APPROPRIATE REMEDIAL ACTION AGREED UPON BY THE ENGINEER.
4. WHERE A STATE OR LOCAL MUNICIPAL STANDARD DETAIL DUPLICATES A DETAIL SHOWN IN THE PLANS, THE MORE STRINGENT DETAIL, AS DETERMINED BY THE REVIEWING AGENCY, SHALL APPLY.
5. NO SITE DISTURBANCE SHALL OCCUR UNTIL THE PRECONSTRUCTION MEETING WITH THE ENVIRONMENTAL INSPECTOR IS HELD.
6. ALL DEMOLITION OF EXISTING CURBING AND SIDEWALKS MUST BE DONE BY HAND WHEN WORKING WITHIN THE 1/2 CRITICAL ROOT ZONE OF EXISTING TREES.
7. TREE PROTECTION FENCE MOVED DURING CONSTRUCTION MUST BE RE-INSTATED AS SOON AS DEMOLITION WORK IS COMPLETED. ANY WORK BEING DONE WITHIN THE TREE PROTECTION FENCE AREA MUST NOT IMPACT TREE(S); NO ROOT DAMAGE AND NO BRANCH OR TRUNK DAMAGE. ADD A 12" LAYER OF MULCH WITHIN THE TREE PROTECTION FENCE AREA PRIOR TO CONDUCTING ANY WORK INSIDE FENCE AREA.
8. LIMITS OF CONSTRUCTION ARE SHOWN ON THE EROSION & SEDIMENTATION CONTROL PLAN(S).
9. REFERENCE "TREE LIST" SHEET AND OVERALL SITE AND EROSION CONTROL PLAN(S) FOR TREE INFORMATION.

TREE LIST

TREE TAG #	TREE SIZE AND DESCRIPTION (INCHES)	STATUS
7256	7" LACE BARK	REMAIN
7257	8" LACE BARK	REMAIN
8045	18" SPANISH OAK	REMAIN
8046	14" SPANISH OAK	REMAIN
8047	14" SPANISH OAK	REMAIN
8048	17" SPANISH OAK	REMAIN

NOT AUTHORIZED FOR CONSTRUCTION PRIOR TO FORMAL CITY APPROVAL

FIRM NO: F-15985
WGI
WGInc.com
2021 EAST 5TH STREET, SUITE 200, AUSTIN, TEXAS, 78702
512.469.5560

STATE OF TEXAS
AMY D. NESKAR
126040
LICENSED
PROFESSIONAL ENGINEER
Amy Neskar 6/20/23

EAST 3RD AND CONGRESS AVENUE

EAST 3RD AND CONGRESS AVENUE
CITY OF AUSTIN, TRAVIS COUNTY, TEXAS 78701

EXISTING CONDITIONS & DEMOLITION PLAN

CITY APPROVAL STAMP

SHEET
C100
04 OF 13

2022-050369 DA

SAVED: 4/5/2023 9:05 PM
PLOTTED BY: ANDREW ROSS JAY
PLOTTED BY: DIEL GONZALEZ
DRAWING: C:\PROJECTS\2022-050369 DA\Congress Proj\10-Civil\10-Sites\EAST 3RD STREET\102277030.00 - C100 EXISTING CONDITIONS.dwg

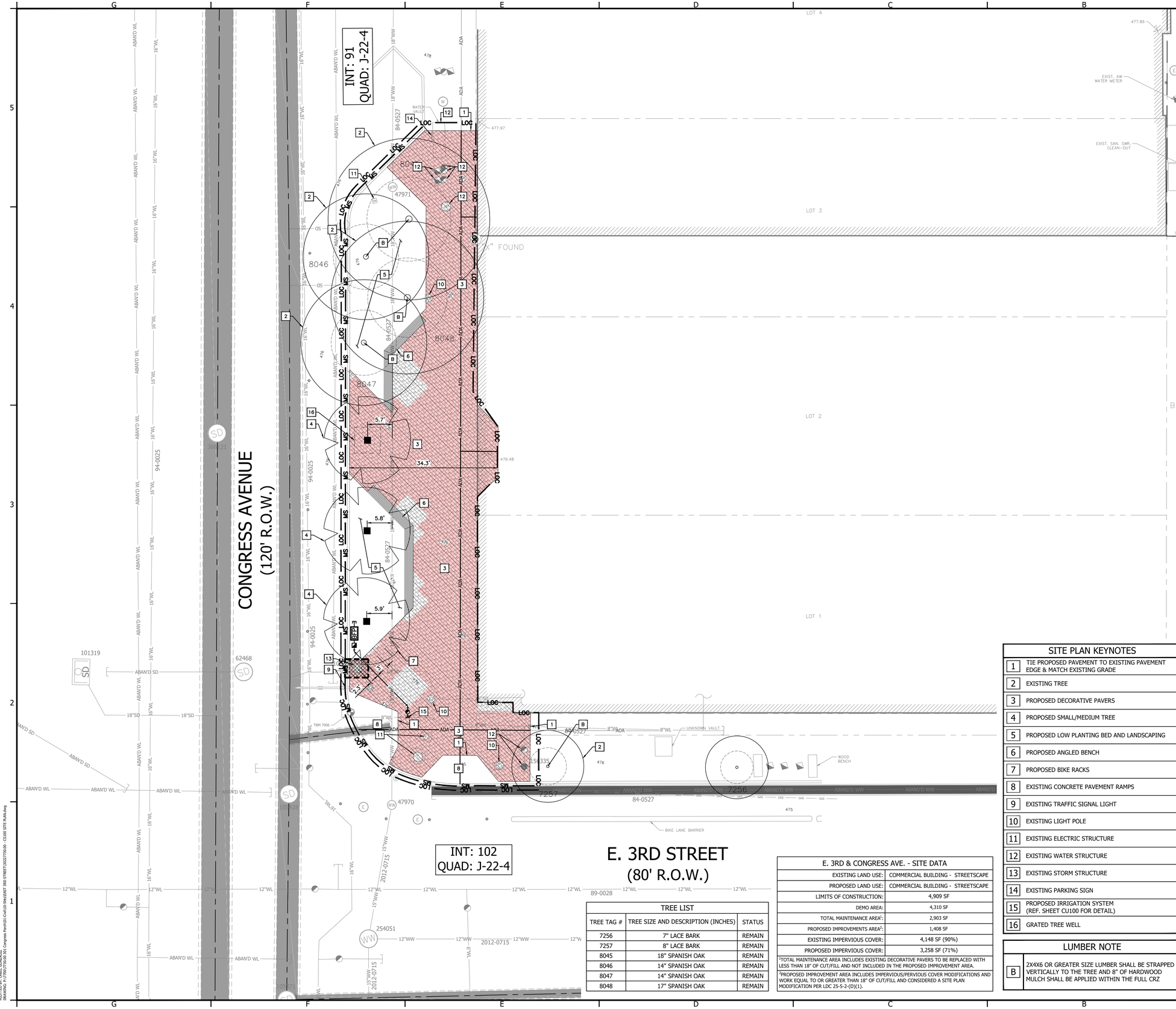

LEGEND

	BOUNDARY / RIGHT OF WAY
	EASEMENT / SETBACK
LOC LOC	LIMITS OF CONSTRUCTION /DISTURBANCE
	CURB & GUTTER
XXXX	CONTOUR (GRADE) ELEV.
STM	STORM SEWER PIPE
W W	WATER LINE
WW	WASTE WATER LINE
	FIRE LANE
ADA	ACCESSIBLE ROUTE (ADA)
G G	UNDERGROUND GAS LINE
OE	OVERHEAD ELECTRIC
	GATE POST FENCE
	WOOD FENCE
	BENCHMARK
	UTILITY/POWER POLE
	METER POLE
	SAMPLE WELL/GREASE TRAP
	ROD/NAIL FOUND OR SET
	ELECTRIC MANHOLE
	TELEPHONE ENCLOSURE
	ELECTRIC/TELECOM BOX
	TELEPHONE CABLE MARKER
	LIGHT POLE
	SIGN
	WASTE WATER MANHOLE
CO	CLEAN-OUT
	WATER METER/VAULT
	FIRE HYDRANT
	WATER VALVE
	BLOWOFF VALVE
	STORM DRAIN MANHOLE
	STORM DRAINAGE INLET
BFP	BACKFLOW PREVENTER
UV	UTILITY VAULT

EROSION AND SEDIMENTATION LEGEND

MS	TEMPORARY MULCH SOCK
LOC LOC	LIMITS OF CONSTRUCTION / DISTURBANCE
	GEOCURVE INLET FILTER PROTECTION

LIMITS OF CONSTRUCTION:	±4,909 SF
TOTAL LENGTH OF MULCH SOCK:	194 LF
NUMBER OF TREE TRUNK LUMBER WRAP:	5 EACH
NUMBER OF INLET PROTECTION:	1 EACH

CAUTION:
CONTRACTOR TO VERIFY ALL EXISTING UTILITIES VERTICALLY AND HORIZONTALLY PRIOR TO CONSTRUCTION. CONTRACTOR TO NOTIFY THE ENGINEER IMMEDIATELY OF ANY DISCREPANCIES.

WARNING!
THE ENGINEER ASSUMES NO RESPONSIBILITY FOR THE ACCURACY OF THE LOCATION OF UNDERGROUND UTILITIES. THE CONTRACTOR SHALL BE RESPONSIBLE FOR AVOIDING ALL EXISTING UTILITIES BY CALLING TEXAS ONE CALL SYSTEM AT 811 FOR LOCATION OF ALL UTILITIES, AT LEAST 72 HOURS PRIOR TO BEGINNING CONSTRUCTION.

EROSION CONTROL NOTES:

1. CONTRACTOR IS RESPONSIBLE FOR IMPLEMENTING EROSION CONTROL PRACTICES AT APPROPRIATE PHASES OF CONSTRUCTION. REPAIR AND REPLACE DAMAGED EROSION CONTROL THROUGHOUT THE DURATION OF CONSTRUCTION.
2. THE CONTRACTOR SHALL OBTAIN ALL NECESSARY PERMITS REGARDING EXCAVATION IN PUBLIC RIGHT-OF-WAY FROM CITY OF HOUSTON AS REQUIRED.
3. CONTRACTOR SHALL CLEAN UP SPOILS THAT MIGRATE INTO EXISTING RIGHT-OF-WAY A MINIMUM OF ONCE PER DAY.
4. ALL STORMWATER LEAVING THE SITE DURING CONSTRUCTION ACTIVITIES MUST PASS THROUGH THE MULCH SOCK.
5. IF DISTURBED AREA IS NOT TO BE WORKED ON FOR MORE THAN 14 DAYS, DISTURBED AREA NEEDS TO BE STABILIZED BY REVEGETATION, MULCH, TARP OR REVEGETATION MATTING.
6. REFERENCE CONSTRUCTION DETAILS FOR ADDITIONAL INFORMATION.
7. CONTRACTOR SHALL FURNISH & INSTALL ALL MATERIALS AND APPURTENANCES AS CALLED OUT ON PLANS.

PROPOSED SITE MAINTENANCE AREA

SITE PLAN KEYNOTES

1	TIE PROPOSED PAVEMENT TO EXISTING PAVEMENT EDGE & MATCH EXISTING GRADE
2	EXISTING TREE
3	PROPOSED DECORATIVE PAVERS
4	PROPOSED SMALL/MEDIUM TREE
5	PROPOSED LOW PLANTING BED AND LANDSCAPING
6	PROPOSED ANGLED BENCH
7	PROPOSED BIKE RACKS
8	EXISTING CONCRETE PAVEMENT RAMPS
9	EXISTING TRAFFIC SIGNAL LIGHT
10	EXISTING LIGHT POLE
11	EXISTING ELECTRIC STRUCTURE
12	EXISTING WATER STRUCTURE
13	EXISTING STORM STRUCTURE
14	EXISTING PARKING SIGN
15	PROPOSED IRRIGATION SYSTEM (REF. SHEET CU100 FOR DETAIL)
16	GRATED TREE WELL

LUMBER NOTE

B	2X4X6 OR GREATER SIZE LUMBER SHALL BE STRAPPED VERTICALLY TO THE TREE AND 8" OF HARDWOOD MULCH SHALL BE APPLIED WITHIN THE FULL CRZ

TREE LIST

TREE TAG #	TREE SIZE AND DESCRIPTION (INCHES)	STATUS
7256	7" LACE BARK	REMAIN
7257	8" LACE BARK	REMAIN
8045	18" SPANISH OAK	REMAIN
8046	14" SPANISH OAK	REMAIN
8047	14" SPANISH OAK	REMAIN
8048	17" SPANISH OAK	REMAIN

E. 3RD & CONGRESS AVE. - SITE DATA

EXISTING LAND USE:	COMMERCIAL BUILDING - STREETSCAPE
PROPOSED LAND USE:	COMMERCIAL BUILDING - STREETSCAPE
LIMITS OF CONSTRUCTION:	4,909 SF
DEMO AREA:	4,310 SF
TOTAL MAINTENANCE AREA[1]:	2,903 SF
PROPOSED IMPROVEMENTS AREA[2]:	1,408 SF
EXISTING IMPERVIOUS COVER:	4,148 SF (90%)
PROPOSED IMPERVIOUS COVER:	3,258 SF (71%)

[1]TOTAL MAINTENANCE AREA INCLUDES EXISTING DECORATIVE PAVERS TO BE REPLACED WITH LESS THAN 18" OF CUT/FILL AND NOT INCLUDED IN THE PROPOSED IMPROVEMENT AREA.

[2]PROPOSED IMPROVEMENT AREA INCLUDES IMPERVIOUS/PERVIOUS COVER MODIFICATIONS AND WORK EQUAL TO OR GREATER THAN 18" OF CUT/FILL AND CONSIDERED A SITE PLAN MODIFICATION PER LDC 25-5-2-(D)(1).

NOT AUTHORIZED FOR CONSTRUCTION PRIOR TO FORMAL CITY APPROVAL

WGI
WGInc.com
2021 EAST 5TH STREET, SUITE 200, AUSTIN, TEXAS, 78702
512.469.5560
FIRM NO: F-15985

STATE OF TEXAS
AMY D. NESKAR
126040
LICENSED
PROFESSIONAL ENGINEER
4/20/23

EAST 3RD AND CONGRESS AVENUE

EAST 3RD AND CONGRESS AVENUE
CITY OF AUSTIN, TRAVIS COUNTY, TEXAS 78701

OVERALL SITE & EROSION CONTROL PLAN

CITY APPROVAL STAMP

SHEET
CS100
05 OF 13

2022-050369 DA

SAVED: 4/6/2023 9:45 AM
PLOTTED BY: AMY D. NESKAR 4/6/2023 9:51 AM
PLOTTED BY: ORIEL GONZALEZ
PLOTTING: U:\T\2020\2020050369_Congress Parcels\3-Civil\10-Sheets\EAST 3RD STREET\10222770.dwg - CS100 SITE PLAN.dwg

LEGEND

	BOUNDARY / RIGHT OF WAY
	EASEMENT / SETBACK
LOC LOC	LIMITS OF CONSTRUCTION /DISTURBANCE
	CURB & GUTTER
XXXX	CONTOUR (GRADE) ELEV.
STM	STORM SEWER PIPE
W W	WATER LINE
WW	WASTE WATER LINE
	FIRE LANE
ADA	ACCESSIBLE ROUTE (ADA)
G G	UNDERGROUND GAS LINE
OE	OVERHEAD ELECTRIC
	GATE POST FENCE
\\ \\	WOOD FENCE
	BENCHMARK
	UTILITY/POWER POLE
	METER POLE
	SAMPLE WELL/GREASE TRAP
	ROD/NAIL FOUND OR SET
	ELECTRIC MANHOLE
	TELEPHONE ENCLOSURE
	ELECTRIC/TELECOM BOX
	TELEPHONE CABLE MARKER
	LIGHT POLE
	SIGN
	WASTE WATER MANHOLE
CO	CLEAN-OUT
	WATER METER/VAULT
	FIRE HYDRANT
	WATER VALVE
	BLOWOFF VALVE
	STORM DRAIN MANHOLE
	STORM DRAINAGE INLET
BFP	BACKFLOW PREVENTER
UV	UTILITY VAULT

CAUTION:
CONTRACTOR TO VERIFY ALL EXISTING UTILITIES VERTICALLY AND HORIZONTALLY PRIOR TO CONSTRUCTION. CONTRACTOR TO NOTIFY THE ENGINEER IMMEDIATELY OF ANY DISCREPANCIES.

WARNING!
THE ENGINEER ASSUMES NO RESPONSIBILITY FOR THE ACCURACY OF THE LOCATION OF UNDERGROUND UTILITIES. THE CONTRACTOR SHALL BE RESPONSIBLE FOR AVOIDING ALL EXISTING UTILITIES BY CALLING TEXAS ONE CALL SYSTEM AT 811 FOR LOCATION OF ALL UTILITIES, AT LEAST 72 HOURS PRIOR TO BEGINNING CONSTRUCTION.

LICENSE AGREEMENT IMPROVEMENTS

1	PROPOSED DECORATIVE PAVERS
2	PROPOSED SMALL/MEDIUM TREE
3	PROPOSED LOW PLANTING BED AND LANDSCAPING
4	PROPOSED ANGLED BENCH
5	PROPOSED BIKE RACKS
6	PROPOSED IRRIGATION SYSTEM (REF. SHEET CU100 FOR DETAIL)
7	GRATED TREE WELL

NOT AUTHORIZED FOR CONSTRUCTION PRIOR TO FORMAL CITY APPROVAL

FIRM NO: F-15985
WGI
WGInc.com
2021 EAST 5TH STREET, SUITE 200, AUSTIN, TEXAS, 78702
512.469.5560

STATE OF TEXAS
AMY D. NESKAR
126040
LICENSED
PROFESSIONAL ENGINEER
4/20/23

EAST 3RD AND CONGRESS AVENUE

EAST 3RD AND CONGRESS AVENUE
CITY OF AUSTIN, TRAVIS COUNTY, TEXAS 78701

LICENSE AGREEMENT PLAN SHEET

CITY APPROVAL STAMP

SHEET
LA
06 OF 13
2022-050369 DA

SAVED: 4/4/2023 9:45 AM
PLOTTED BY: ANDREW MOSS 4/20/2023 11:33 AM
PLOTTED BY: DIEL GONZALEZ
DRAWING: C:\0000\2022\050369\CU\Congress Pavin\01-Civil\10-Site\EAST 3RD STREET\302273\50 - CS100 SITE PLAN.dwg

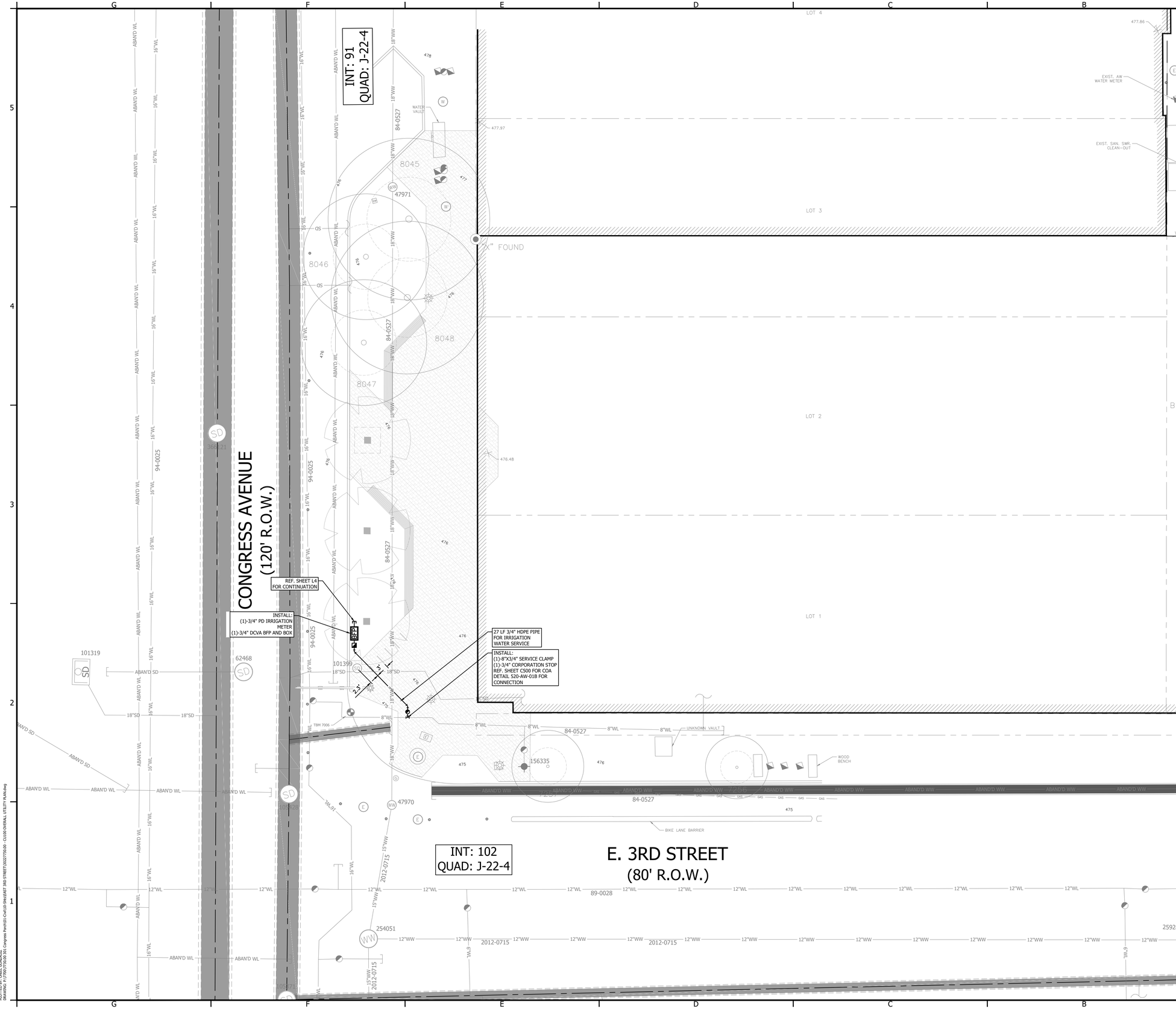

0 5' 10' 20'

LEGEND

	BOUNDARY / RIGHT OF WAY
	EASEMENT / SETBACK
LOC LOC	LIMITS OF CONSTRUCTION /DISTURBANCE
	CURB & GUTTER
XXXX	CONTOUR (GRADE) ELEV.
STM	STORM SEWER PIPE
W W	WATER LINE
WW	WASTE WATER LINE
	FIRE LANE
ADA	ACCESSIBLE ROUTE (ADA)
G G	UNDERGROUND GAS LINE
OE	OVERHEAD ELECTRIC
	GATE POST FENCE
	WOOD FENCE
	BENCHMARK
	UTILITY/POWER POLE
	METER POLE
	SAMPLE WELL/GREASE TRAP
	ROD/NAIL FOUND OR SET
	ELECTRIC MANHOLE
	TELEPHONE ENCLOSURE
	ELECTRIC/TELECOM BOX
	TELEPHONE CABLE MARKER
	LIGHT POLE
	SIGN
	WASTE WATER MANHOLE
	CLEAN-OUT
	WATER METER/VAULT
	FIRE HYDRANT
	WATER VALVE
	BLOWOFF VALVE
	STORM DRAIN MANHOLE
	STORM DRAINAGE INLET
BFP	BACKFLOW PREVENTER
UV	UTILITY VAULT

CAUTION:
CONTRACTOR TO VERIFY ALL EXISTING UTILITIES VERTICALLY AND HORIZONTALLY PRIOR TO CONSTRUCTION. CONTRACTOR TO NOTIFY THE ENGINEER IMMEDIATELY OF ANY DISCREPANCIES.

WARNING!
THE ENGINEER ASSUMES NO RESPONSIBILITY FOR THE ACCURACY OF THE LOCATION OF UNDERGROUND UTILITIES. THE CONTRACTOR SHALL BE RESPONSIBLE FOR AVOIDING ALL EXISTING UTILITIES BY CALLING TEXAS ONE CALL SYSTEM AT 811 FOR LOCATION OF ALL UTILITIES, AT LEAST 72 HOURS PRIOR TO BEGINNING CONSTRUCTION.

NOT AUTHORIZED FOR CONSTRUCTION PRIOR TO FORMAL CITY APPROVAL

FIRM NO: F-15985
512.469.5560
WGI
WGInc.com
2021 EAST 5TH STREET, SUITE 200, AUSTIN, TEXAS, 78702

STATE OF TEXAS
AMY D. NESKAR
126040
LICENSED
PROFESSIONAL ENGINEER
4/20/23

EAST 3RD AND CONGRESS AVENUE

EAST 3RD AND CONGRESS AVENUE
CITY OF AUSTIN, TRAVIS COUNTY, TEXAS 78701

OVERALL UTILITY PLAN

CITY APPROVAL STAMP

SHEET
CU100
07 OF 13
2022-050369 DA

SAVED: 4/4/2023 9:45 AM
PLOTTED BY: AMY DUNCAN 4/4/2023 9:53 AM
PLOTTED BY: ONEIL GONZALEZ
DRAWING: C:\0000\2022\050369\CU\Congress Parts\01-Civil\10-Site\EAST 3RD STREET\302272500 - CU100 OVERALL UTILITY PLAN.dwg

STABILIZED CONSTRUCTION ENTRANCE

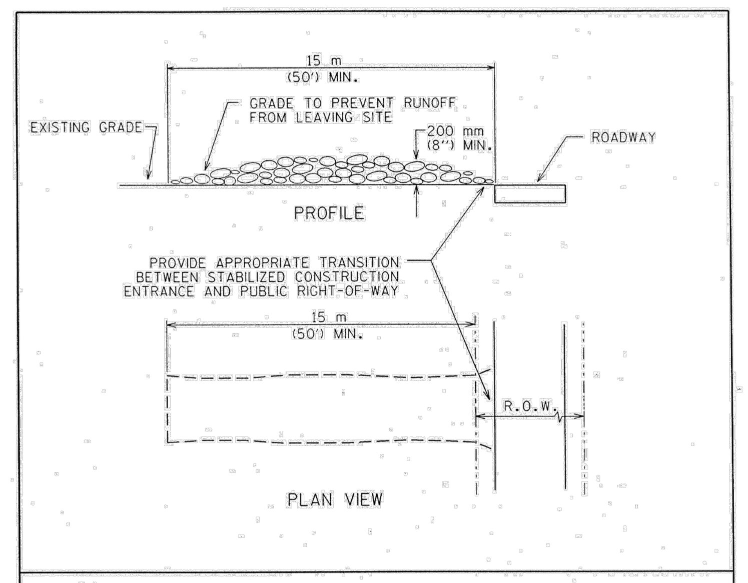

NOTES:
1. STONE SIZE: 75-125 mm (3-5") OPEN GRADED ROCK.
2. LENGTH: AS EFFECTIVE BUT NOT LESS THAN 15 m (50').
3. THICKNESS: NOT LESS THAN 200 mm (8").
4. WIDTH: NOT LESS THAN FULL WIDTH OF ALL POINTS OF INGRESS/EGRESS.
5. WASHING: WHEN NECESSARY, VEHICLE WHEELS SHALL BE CLEANED TO REMOVE SEDIMENT PRIOR TO ENTRANCE ONTO PUBLIC ROADWAY. WHEN WASHING IS REQUIRED, IT SHALL BE DONE ON AN AREA STABILIZED WITH CRUSHED STONE AND DRAINS INTO AN APPROVED TRAP OR SEDIMENT BASIN. ALL SEDIMENT SHALL BE PREVENTED FROM ENTERING ANY STORM DRAIN, DITCH OR WATERCOURSE USING APPROVED METHODS.
6. MAINTENANCE: THE ENTRANCE SHALL BE MAINTAINED IN A CONDITION THAT WILL PREVENT TRACKING OR FLOWING OF SEDIMENT ONTO PUBLIC ROADWAY. THIS MAY REQUIRE PERIODIC TOP DRESSING WITH ADDITIONAL STONE AS CONDITIONS DEMAND, AS WELL AS REPAIR AND CLEAN OUT OF ANY MEASURE DEVICES USED TO TRAP SEDIMENT. ALL SEDIMENTS THAT IS SPILLED, DROPPED, WASHED OR TRACKED ONTO PUBLIC ROADWAY MUST BE REMOVED IMMEDIATELY.
7. DRAINAGE: ENTRANCE MUST BE PROPERLY GRADED OR INCORPORATE A DRAINAGE SWALE TO PREVENT RUNOFF FROM LEAVING THE CONSTRUCTION SITE.

CITY OF AUSTIN — WATERSHED PROTECTION DEPARTMENT | STABILIZED CONSTRUCTION ENTRANCE
5/23/00 ADOPTED | THE ARCHITECT/ENGINEER ASSUMES RESPONSIBILITY FOR APPROPRIATE USE OF THIS STANDARD. | STANDARD NO. 641S-1

STABILIZED CONSTRUCTION ENTRANCE

SILT FENCE

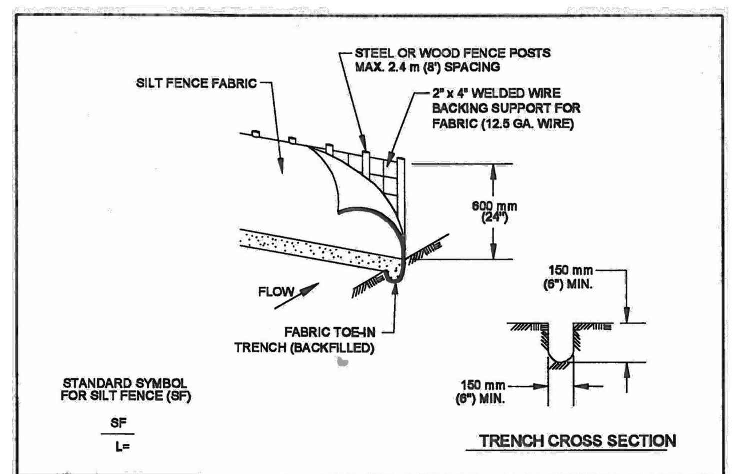

1. STEEL OR WOOD POSTS WHICH SUPPORT THE SILT FENCE SHALL BE INSTALLED ON A SLIGHT ANGLE TOWARD THE ANTICIPATED RUNOFF SOURCE. POST MUST BE EMBEDDED A MINIMUM OF 300 mm (12 INCHES). IF WOOD POSTS CANNOT ACHIEVE 300 mm (12 inches) DEPTH, USE STEEL POSTS.

2. THE TOE OF THE SILT FENCE SHALL BE TRENCHED IN WITH A SPADE OR MECHANICAL TRENCHER, SO THAT THE DOWNSLOPE FACE OF THE TRENCH IS FLAT AND PERPENDICULAR TO THE LINE OF FLOW.

3. THE TRENCH MUST BE A MINIMUM OF 150 mm (6 inches) DEEP AND 150 mm (6 inches) WIDE TO ALLOW FOR THE SILT FENCE FABRIC TO BE LAID IN THE GROUND AND BACKFILLED WITH COMPACTED MATERIAL.

4. SILT FENCE FABRIC SHOULD BE SECURELY FASTENED TO EACH STEEL OR WOOD SUPPORT POST OR TO WOVEN WIRE, WHICH IS IN TURN ATTACHED TO THE STEEL OR WOOD FENCE POST.

5. INSPECTION SHALL BE MADE WEEKLY OR AFTER EACH RAINFALL EVENT AND REPAIR OR REPLACEMENT SHALL BE MADE PROMPTY AS NEEDED.

6. SILT FENCE SHALL BE REMOVED WHEN THE SITE IS COMPLETELY STABILIZED SO AS NOT TO BLOCK OR IMPEDE STORM FLOW OR DRAINAGE.

7. ACCUMULATED SILT SHALL BE REMOVED WHEN IT REACHES A DEPTH OF 150 mm (6 inches). THE SILT SHALL BE DISPOSED OF ON AN APPROVED SITE AND IN SUCH A MANNER THAT WILL NOT CONTRIBUTE TO ADDITIONAL SILTATION.

CITY OF AUSTIN — WATERSHED PROTECTION DEPARTMENT | SILT FENCE
9/1/2011 ADOPTED | THE ARCHITECT/ENGINEER ASSUMES RESPONSIBILITY FOR APPROPRIATE USE OF THIS STANDARD. | STANDARD NO. 642S-1

SILT FENCE

MULCH SOCK

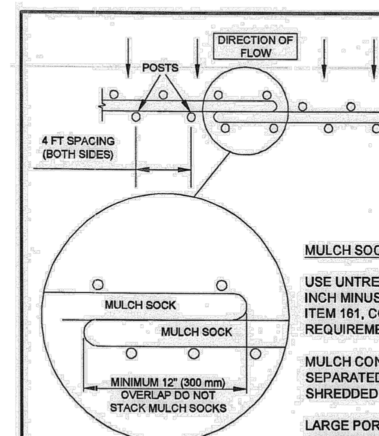

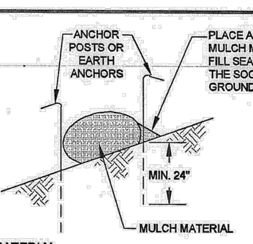

MULCH SOCK MATERIAL

USE UNTREATED WOOD CHIPS PRODUCED FROM A 3 (THREE) INCH MINUS SCREENING PROCESS (EQUIVALENT TO TXDOT ITEM 161, COMPOST, SECTION 1.6.2.B, WOOD CHIP REQUIREMENTS).

MULCH CONSISTS PRIMARILY OF ORGANIC MATERIAL, SEPARATED AT THE POINT OF GENERATION, AND MAY INCLUDE: SHREDDED BARK, STUMP GRINDINGS, OR COMPOSTED BARK.

LARGE PORTIONS OF SILT, CLAYS, OR FINE SANDS ARE NOT ACCEPTABLE IN THE MULCH.

NOTES:
1. STEEL OR WOOD POSTS WHICH SUPPORT THE MULCH SOCK SHALL BE INSTALLED ON A SLIGHT ANGLE TOWARD THE ANTICIPATED RUNOFF SOURCE. POST MUST BE EMBEDDED A MINIMUM OF 600mm (24 inches). IF WOOD POSTS CANNOT ACHIEVE 600mm (24 inches) DEPTH, USE STEEL POSTS. EARTH ANCHORS ARE ALSO ACCEPTABLE.
2. THE TOE OF THE MULCH SOCK SHALL BE PLACED SO THAT THE MULCH SOCK IS FLAT AND PERPENDICULAR TO THE LINE OF FLOW. IN ORDER TO PREVENT WATER FROM FLOWING BETWEEN THE JOINTS OF ADJACENT ENDS OFMULCH SOCKS, LAP THE ENDS OF ADJACENT MULCH SOCKS A MINIMUM OF 300mm (12 inches).
3. MULCH MATERIAL MUST BE FREE OF REFUSE, PHYSICAL CONTAMINANTS, AND MATERIAL TOXIC TO PLANT GROWTH; IT IS NOT ACCEPTABLE FOR THE MULCH MATERIAL TO CONTAIN GROUND CONSTRUCTION DEBRIS, BIOSOLIDS, OR MANURE.
4. SOCK MATERIAL WILL BE 100% BIODEGRADABLE, PHOTODEGRADABLE, OR RECYCLABLE SUCH AS BURLAP, TWINE, UV PHOTOBIODEGRADABLE PLASTIC, POLYESTER, OR ANY OTHER ACCEPTABLE MATERIAL.
5. MULCH SOCKS SHOULD BE USED AT THE BASE OF SLOPES NO STEEPER THAN 2:1 AND SHOULD NOT EXCEED THE MAXIMUM SPACING CRITERIA PROVIDED IN CITY OF AUSTIN ENVIRONMENTAL CRITERIA MANUAL TABLE 1.4.5.F.1 FOR A GIVEN SLOPE CATEGORY.
6. ACCUMULATED SILT SHALL BE REMOVED WHEN IT REACHES A DEPTH OF 150mm (6 inches). THE SILT SHALL BE DISPOSED OF ON AN APPROVED SITE AND IN SUCH A MANNER THAT WILL NOT CONTRIBUTE TO ADDITIONAL SILTATION.

CITY OF AUSTIN — WATERSHED PROTECTION DEPARTMENT | MULCH SOCK
08/24/2010 ADOPTED | THE ARCHITECT/ENGINEER ASSUMES RESPONSIBILITY FOR APPROPRIATE USE OF THIS STANDARD. | STANDARD NO. 648S-1

MULCH SOCK

WATER SERVICE & METER INSTALLATION - 1" & SMALLER METERS

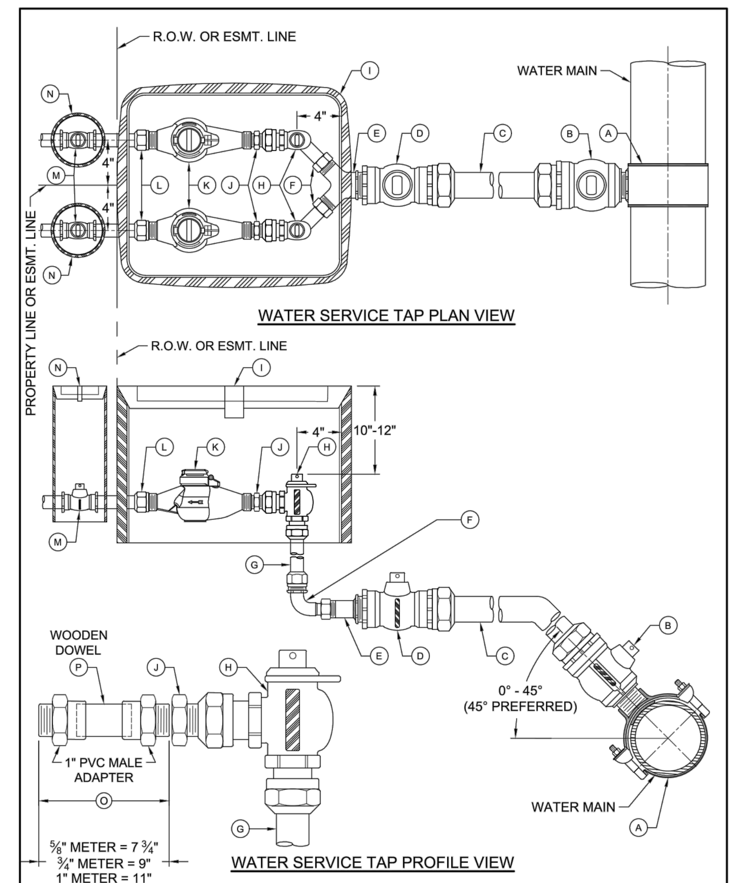

CITY OF AUSTIN — AUSTIN WATER | WATER SERVICE & METER INSTALLATION - 1" & SMALLER METERS
JEFF A. KYLE 08/16/2019 ADOPTED | THE ARCHITECT/ENGINEER ASSUMES RESPONSIBILITY FOR APPROPRIATE USE OF THIS STANDARD. | STANDARD NO. 520-AW-01B 1 OF 2

WATER SERVICE & METER INSTALLATION - 1" & SMALLER METERS

WATER SERVICE & METER INSTALLATION - 1" & SMALLER METERS

MATERIALS LIST:
A. 2" SERVICE CLAMP, SPL WW-264
B. 2" CORPORATION STOP, SPL WW-68
C. 2" HDPE WATER SERVICE TUBING, SPL WW-65
D. 2" BALL VALVE, SPL WW-68
E. SINGLE SERVICE: 2" MIP X 1" COPPER FLARE FITTING, SPL WW-68 OR DOUBLE SERVICE: 2" MIP X 1" COPPER FLARE WYE, SPL WW-68
F. 1" SWIVEL NUT x 1" COMPRESSION 90° BEND, SPL WW-68
G. 1" HDPE WATER SERVICE TUBING, SPL WW-65
H. 1" ANGLE METER STOP, SPL WW-68
I. METER BOX AND LID, SPL WW-145A; FOR DUAL 1" METERS: USE TWO SINGLE METER BOXES

MATERIALS TO BE INSTALLED BY PLUMBER:
J. BRASS METER BUSHING - SIZE AS NEEDED TO CONNECT ANGLE METER STOP TO METER
K. WATER METER PURCHASED FROM AUSTIN WATER
L. BRASS WATER METER COUPLING MALE IPT x SWIVEL COUPLING NUT: ⅝" AND ¾" METERS: 8 ½" LONG x ¾" DIA. 1" METERS: 8 ½" LONG x 1" DIA.
M. PROPERTY OWNER'S CUT OFF VALVE, SPL WW-276
N. PROPERTY OWNER'S CUT OFF VALVE BOX AND LID
O. TEMPORARY METER SPACER (REQUIRED TO ASSURE METER WILL FIT APPROPRIATELY)
P. 1" WOODEN DOWEL (SHOW ADDRESS ON DOWEL USING WATERPROOF MARKER)

NOTES:
1. SERVICE CLAMP SHALL BE WRAPPED COMPLETELY WITH 8 MIL. POLYETHYLENE FILM, SPL WW-27D.
2. BRANCH CONNECTIONS AND ALL ANGLE METER STOPS MUST BE INSTALLED PRIOR TO ANY METER INSTALLATION.
3. TOP OF METER BOXES SHOULD BE 4" ABOVE GROUND.
4. PIPING AND TUBING IN STREET RIGHT-OF-WAY SHALL BE BEDDED IN GRANULAR MATERIALS AS REQUIRED BY SECTION 510.3 (14) OF THE CITY OF AUSTIN STANDARD SPECIFICATIONS; BACKFILL ABOVE GRANULAR BEDDING AS REQUIRED BY SECTION 510.3 (25).
5. METER BOX MUST BE BEHIND CURB NEXT TO PROPERTY LINE OR EASEMENT AND OUT OF VEHICULAR TRAFFIC AREA AND SIDEWALK.
6. BALL VALVE "D" SHALL NOT BE LOCATED UNDER SIDEWALK, CURB, OR PAVEMENT, AND NOT BE LOCATED MORE THAN 36" BELOW FINAL GRADE.
7. METER SIZES TO BE SHOWN ON PLANS.
8. METER BOX CUT OUTS SHALL NOT EXCEED TWO TIMES THE PIPE DIAMETER.
9. INSTALL METALLIC TRACER TAPE, SPL WW-597, MINIMUM 1' ABOVE TUBING FROM SERVICE CLAMP "A" TO BALL VALVE "D".
10. TUBING SHALL BE PLACED IN A STRAIGHT ALIGNMENT AND ALLOWED TO RELAX AND "SNAKE" LOOSELY IN THE TRENCH. TUBING BEHIND CURB AND GUTTER SHALL BE INSTALLED WITH A MINIMUM 2' DEPTH OF COVER.
11. 1" TUBING, WHEN BENT, SHALL HAVE A RADIUS NO SMALLER THAN 3'. 2" TUBING, WHEN BENT, SHALL HAVE A RADIUS NO SMALLER THAN 5'. BRASS FITTINGS SHALL NOT BE CONNECTED TO A BENT SECTION OF TUBING.
12. SOLID, TUBULAR STAINLESS STEEL INSERT STIFFENERS FOR HDPE TUBING SHALL BE USED AT ALL COMPRESSION FITTINGS. INSERT STIFFENERS SHALL BE FROM THE SAME MANUFACTURER AS THE COMPRESSION FITTING USED.
13. FOR RECLAIMED WATER SERVICES AND METERS, ALL RECLAIMED TUBING SHALL BE MANUFACTURED SOLID PURPLE, SPL WW-65A. ALL APPURTENANCES SHALL BE MANUFACTURED PURPLE IF AVAILABLE. ALL FITTINGS THAT ARE NOT AVAILABLE FROM THE MANUFACTURER IN PURPLE SHALL BE PAINTED PURPLE PER SPL WW-3C. ALL METER BOX LIDS SHALL BE PURPLE AND HAVE **"RECLAIMED WATER"** CAST INTO THEM, SPL WW-145A.

CITY OF AUSTIN — AUSTIN WATER | WATER SERVICE & METER INSTALLATION - 1" & SMALLER METERS
JEFF A. KYLE 08/16/2019 ADOPTED | THE ARCHITECT/ENGINEER ASSUMES RESPONSIBILITY FOR APPROPRIATE USE OF THIS STANDARD. | STANDARD NO. 520-AW-01B 2 OF 2

WATER SERVICE & METER INSTALLATION - 1" & SMALLER METERS

TREE PROTECTION FENCE LOCATIONS

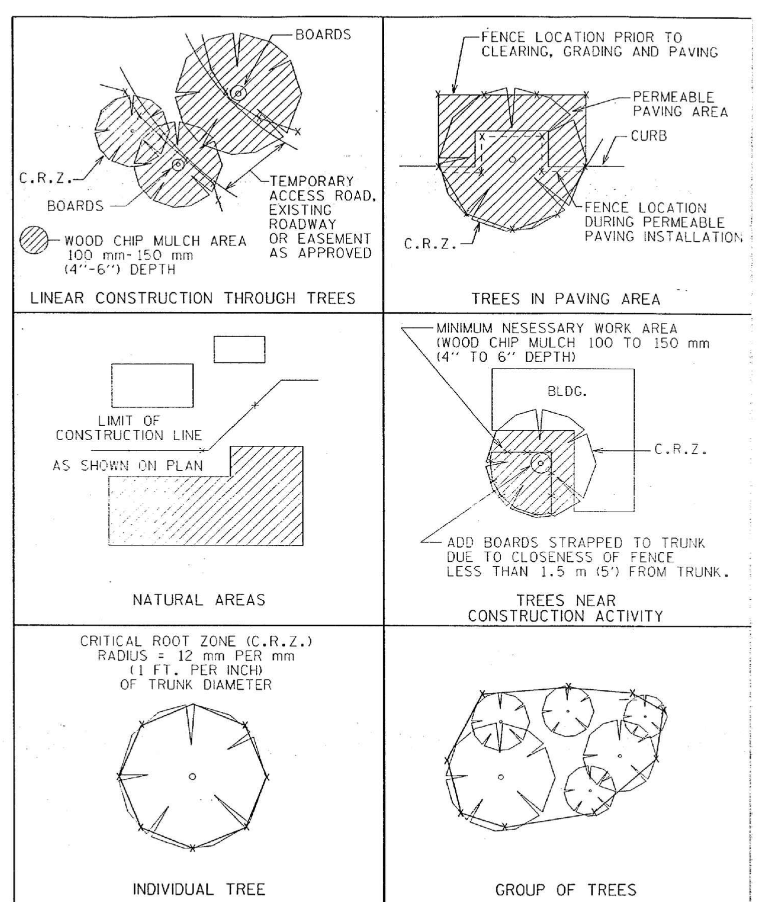

CITY OF AUSTIN — WATERSHED PROTECTION DEPARTMENT | TREE PROTECTION FENCE LOCATIONS
11/15/22 ADOPTED | THE ARCHITECT/ENGINEER ASSUMES RESPONSIBILITY FOR APPROPRIATE USE OF THIS STANDARD. | STANDARD NO. 610S-1

TREE PROTECTION FENCE LOCATIONS

TREE PROTECTION FENCE

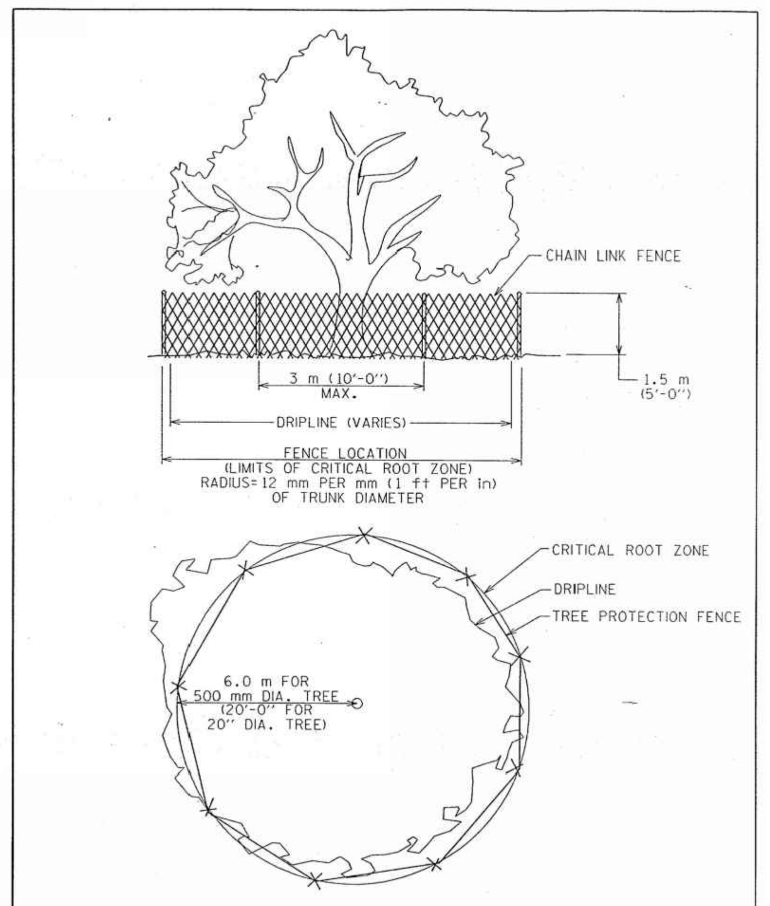

CITY OF AUSTIN — WATERSHED PROTECTION DEPARTMENT | TREE PROPTECTION FENCE TYPE A - CHAIN LINK
11/15/22 ADOPTED | THE ARCHITECT/ENGINEER ASSUMES RESPONSIBILITY FOR APPROPRIATE USE OF THIS STANDARD. | STANDARD NO. 610S-2

TREE PROTECTION FENCE

STORM INLET SEDIMENT TRAP

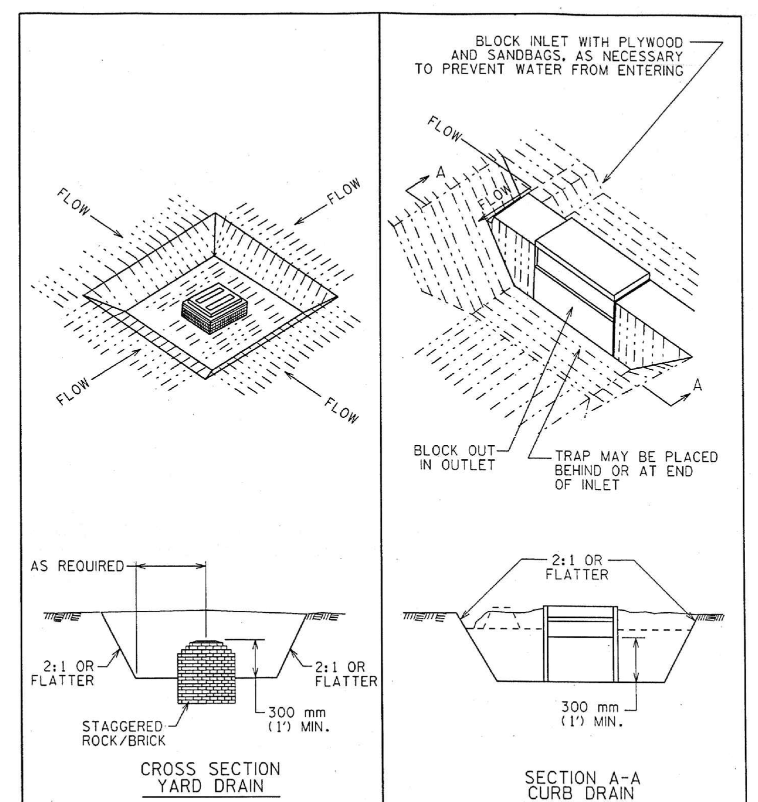

NOTE:
WHERE CURB IS IN PLACE, PROVIDE A 300 mm (1') WIDE OPENING IN THE CURB, OR USE A SANDBAG TO DAM TO FORCE WATER OVER THE CURB TO THE TRAP.

CITY OF AUSTIN — WATERSHED PROTECTION DEPARTMENT | STORM INLET SEDIMENT TRAP
3-27-00 ADOPTED | THE ARCHITECT/ENGINEER ASSUMES RESPONSIBILITY FOR APPROPRIATE USE OF THIS STANDARD. | STANDARD NO. 632S-1

STORM INLET SEDIMENT TRAP

CONCRETE WASHOUT PIT DETAIL

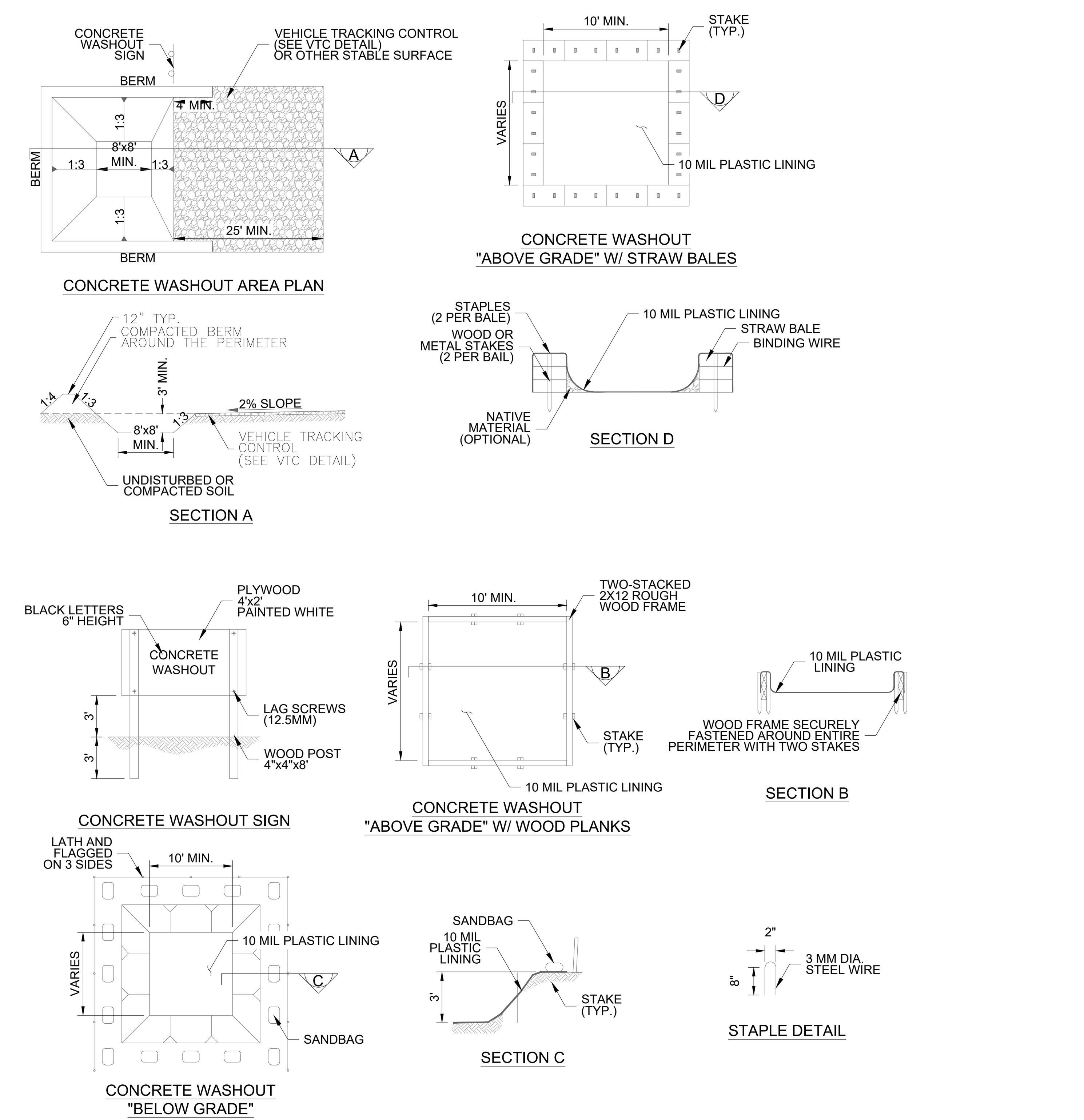

CONCRETE WASHOUT PIT
NOT TO SCALE

NOTES:
1. SEE PLAN VIEW FOR CWA INSTILLATION LOCATION.
2. DO NOT LOCATE AN UNLINED CWA WITHIN 400' OF ANY NATURAL DRAINAGE PATHWAY OR WATERBODY, DO NOT LOCATE WITHIN 1,000' OF ANY WELLS OR DRINKING WATER SOURCES. IF SITE CONTRAINTS MAKE THIS INFEASIBLE, OR IF HIGHLY PERMEABLE SOILS EXIST ON SITE, THE CWA MUST BE INSTALLED WITHIN AN IMPERMEABLE LINER (16 MIL MIN. THICKNESS) OR SURFACE STORAGE ALTERNATIVES USING PREFABRICATED CONCRETE WASHOUT DEVICES OR A LINED ABOVE GROUND STORAGE AREA SHOULD BE USED.
3. THE CWA SHALL BE INSTALLED PRIOR TO CONCRETE PLACEMENT ON SITE
4. CWA SHALL INCLUDE A FLAT SUBSURFACE PIT THAT IS AT LEAST 8' BY 8' SLOPES LEADING OUT OF THE SUBSURFACE PIT SHALL BE 3:1 OR FLATTER. THE PIT SHALL BE AT LEAST 3' DEEP.
5. BERM SURROUNDING SIDES AND BACK OF THE CWA SHALL HAVE A MINIMUM HEIGHT OF 1'.
6. VEHICLE TRACKING PAD SHALL BE SLOPED 2% TOWARDS THE CWA.
7. SIGNS SHALL BE PLACED AT THE CONSTRUCTION ENTRANCE, THE THE CWA, AND ELSEWHERE AS NECESSARY TO CLEARLY INDICATE THE LOCATION OF THE CWA TO OPERATORS OF CONCRETE TRUCKS AND PUMP RIGS.
8. USE EXCAVATED MATERIAL FOR PERIMETER BERM CONSTRUCTION.
9. ACTUAL LAYOUT DETERMINED IN THE FIELD.
10. THE CONCRETE WASHOUT SIGN SHALL BE INSTALLED WITHIN 10FT OF THE TEMPORARY CONCRETE WASHOUT FACILITY.
11. MATERIALS USED TO CONSTRUCT TEMPORARY CONCRETE WASHOUT FACILITIES SHALL BE REMOVED FROM THE SITE OF THE WORK AND DISPOSED OF OR RECYCLED.
12. HOLES, DEPRESSIONS OR OTHER GROUND DISTURBANCE CAUSED BY THE REMOVAL OF TEMPORARY CONCRETE WASHOUT FACILITIES SHALL BE BACKFILLED, REPAIRED, AND STABILIZED TO PREVENT EROSION.

CONCRETE WASHOUT PIT DETAIL

GEOCURVE INLET FILTER STANDARD DETAIL

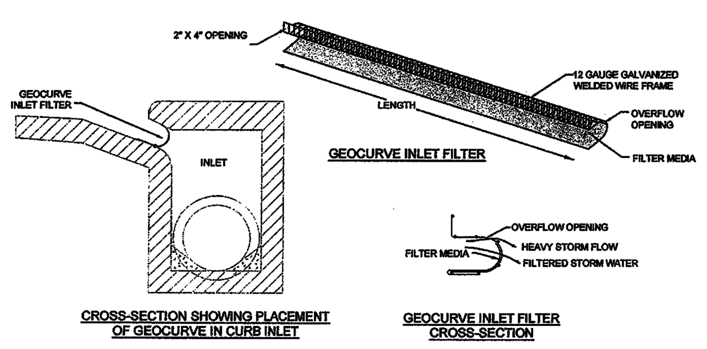

NOTES:
1. The GeoCurve Inlet Filter shall be forced into the curb inlet to create a compression fit into the inlet.
2. The filter media for projects within City of Austin jurisdiction is to be GeoSolutions CI-1 woven filter fabric.
3. The filter media is to be attached to the wire frame with hog rings leaving an overflow opening above the filter media.
4. Inspection shall be made by the contractor and silt accumulation must be removed when the depth reaches 2 inches.
5. Inlet filter shall be removed upon stablilization of the sediment source.

GeoCurve Inlet Filter
Standard Detail
April 13, 2009

GEOCURVE INLET FILTER STANDARD DETAIL

GEOCURVE INLET FILTER STANDARD DETAIL

GeoSolutions, Inc. — Product Data Sheet — GeoCurve Inlet Filter

The GeoCurve Inlet Filter is a stormwater filter for placement into a stormwater curb inlet for the purpose of capturing debris and sediment that is transported by stormwater runoff. The device is comprised of a filter media (woven monofilament filter fabric) affixed to the lower portion of a "C" shaped 12 gauge welded wire frame (2" x 4" openings) with an upper retention flange. The device effectively filters stormwater, can easily be removed for maintenance and cleaning and incorporates an overflow window for heavy storm events.

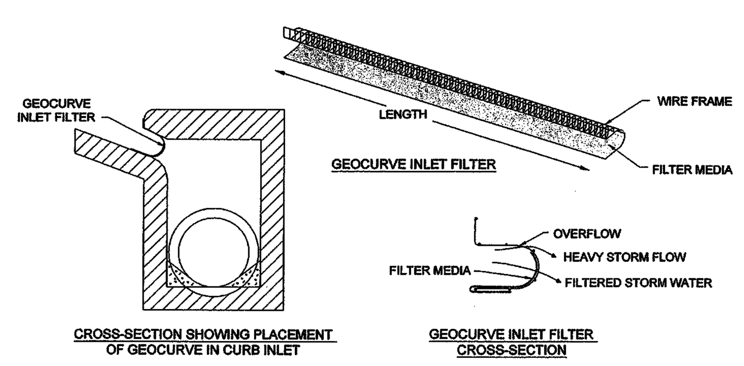

FILTER MEDIA PROPERTIES: Mono-filament Woven Filter Fabric

PROPERTY	ASTM TEST METHOD	VALUE	C.O.A. REQ'T
Fabric Weight	D 3776	4.5 oz/sy	3 oz/sy
Grab Tensile Strength	D 4632	170 lbs	----
Mullen Burst Strength	D 3786	410 lbs/sq in	120 lbs/sq in
UV Stability	D 4355	80 %	70 %
Water Flow Rate	D 4491	325 gal/min/sf	275 gal/min/sf

GeoSolutions, Inc. 4417 Burleson Road Austin, Texas 78744 512-330-0796

GEOCURVE INLET FILTER STANDARD DETAIL

GEOCURVE INLET FILTER STANDARD DETAIL

FILTER MEDIA PROPERTIES: Mono-filament Woven Filter Fabric

PROPERTY	ASTM TEST METHOD	VALUE	C.O.A. REQ'T
Fabric Weight	D 3776	4.5 oz/sy	3 oz/sy
Grab Tensile Strength	D 4632	170 lbs	----
Mullen Burst Strength	D 3786	410 lbs/sq in	120 lbs/sq in
UV Stability	D 4355	80 %	70 %
Water Flow Rate	D 4491	325 gal/min/sf	275 gal/min/sf

Design Criteria/Material continued …

The material should have a maximum life expectancy of 18 months.
The inlet protection should allow cleanout and disposal of trapped sediment.
Devices to be constructed such that any ponding of stormwater will will not cause R.O.W. flooding in excess of 4 inches of standing water.
Conformance: Yes, max. life expectancy of GeoCurve is 18 months. The GeoCurve can be easily removed to dump captured sediment or sediment can be removed with a shovel if desired. Hydraulic testing verified that the GeoCurve does not cause water to back up into the street.

Coverage: The fabric/wire should completely cover the opening of the inlet and the device should be installed without protruding parts. Fabric overlap shall be min. 3 inches.
Conformance: Yes, the fabric/wire covers the inlet opening. The GeoCurve is placed within the throat of the inlet therefore there are no protruding parts. There are no fabric laps.

Attachment: The inlet filter must be easy to remove and can not be attached with sand bags.
Conformance: Yes, the GeoCurve is easy to remove and is secured by a patented compression fit without the need for sand bags.

Maintenance: Accumulated silt to be removed when it reaches 2 inches or 1/3 the inlet throat height.
Conformance: Yes, the GeoCurve can be easily removed to dump accumulated silt.

GeoSolutions, Inc. 4417 Burleson Road Austin, Texas 78744 512-330-0796

GEOCURVE INLET FILTER STANDARD DETAIL

NOT AUTHORIZED FOR CONSTRUCTION PRIOR TO FORMAL CITY APPROVAL

FIRM NO: F-15085
WGInc.com
2021 EAST 5TH STREET, SUITE 200, AUSTIN, TEXAS, 78702
512.669.5560

STATE OF TEXAS — AMY D. NESKAR — 126040 — LICENSED PROFESSIONAL ENGINEER — 4/20/23

EAST 3RD AND CONGRESS AVENUE
EAST 3RD AND CONGRESS AVENUE
CITY OF AUSTIN, TRAVIS COUNTY, TEXAS 78701

STANDARD DETAILS (ENS)

CITY APPROVAL STAMP

SHEET
C500
08 OF 13
2022-050369 DA

SAVED: 4/5/2023 8:43 PM
PLOT DATE: 4/14/2023 10:33 AM
PLOTTED BY: ONIEL GONZALEZ
DRAWING: P:\7700\7730.00 301 Congress Porch\01-Civil\10-Shts\EAST 3RD STREET\30227730.00 - C500 STANDARD DETAILS.dwg

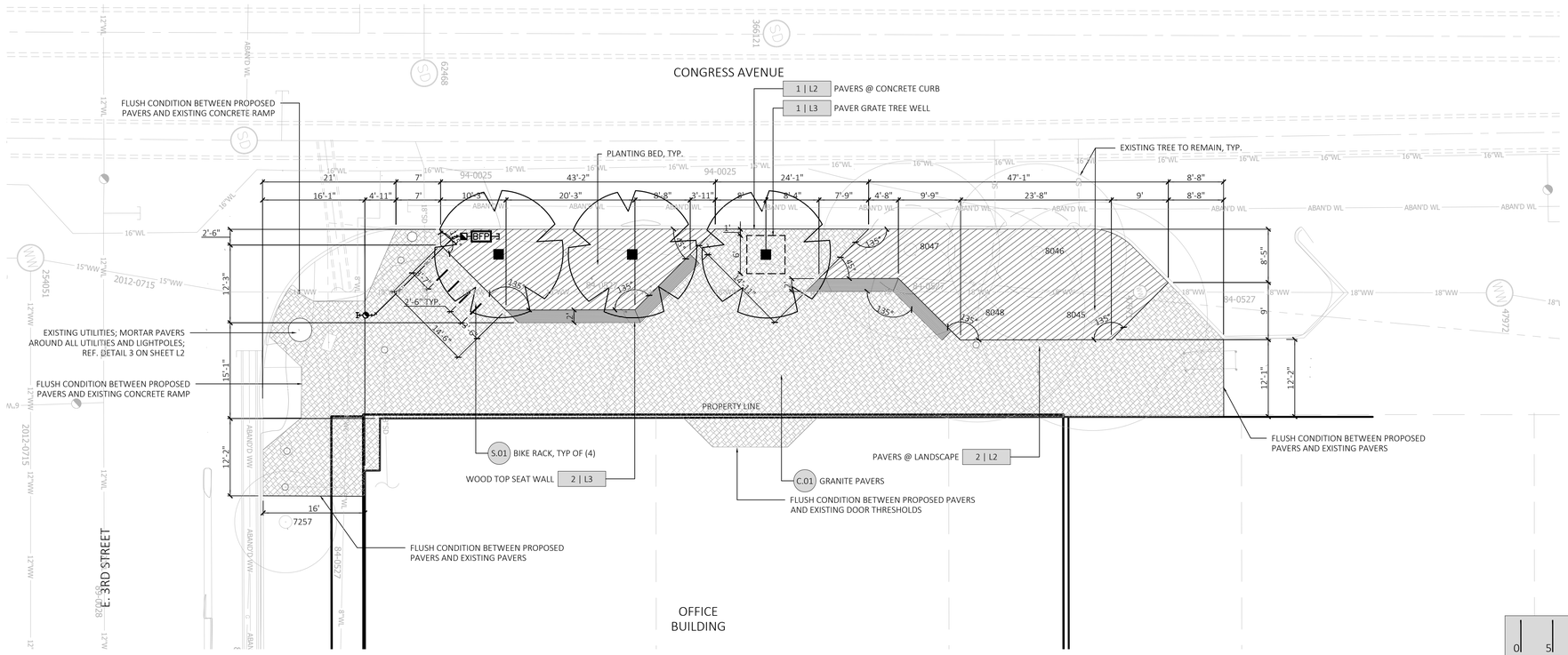

PLANT LIST

Quantity	Symbol	Scientific Name	Common Name	Size	Comments
3		*Quercus shumardii*	Shumard Red Oak	6" Cal.	Container grown, 100 gal.

LANDSCAPE MATERIALS SCHEDULE

	SYMBOL	ITEM DESCRIPTION	CONTACT	COLOR | FINISH	COMMENTS
CONCRETE | STONE	C.01	ITEM: Texas Pink Granite Paver Thickness: 2.5" Size: 4"x8", 8"x8", 8"x12" Pattern: Random Running Bond	Local Source - Submit Samples for Approval	COLOR: Pink (Sunset Red) FINISH: Sawn-All-Sides	· Contractor to submit 6"x6" sample from stone supplier for Landscape Architect approval prior to purchasing · Contractor to provide a 5'x5' onsite mockup for Landscape Architect and Architect approval prior to installation · Contractor to ensure no chipping during transportation or installation
	C.02	ITEM: Smooth Concrete Wall Finish	CONTACT: N/A	COLOR: Natural Gray FINISH: Smooth Finish; All Sides	· Contractor to submit concrete mix data for Landscape Architect approval prior to installation · Contractor to vibrate walls thoroughly to ensure there are no honeycombs in wall surface or top · Contractor to provide a 5'-0" long x 24" tall mock-up for Landscape Architect approval prior to installation
SITE FURNISHINGS	S.01	ITEM: Bike Rack MODEL NAME: "U" Bicycle Rack 1-7/8" O.D. Tubing MODEL #: U190-SF-P QTY: (4)	COMPANY: Belson Outdoors PHONE: 1.800.323.5664	COLOR: Gunmetal FINISH: Powdercoat	· Contractor to submit product data for Landscape Architect approval prior to installation · Surface Mount · Install per manufacturer's recommendation
	S.02	ITEM: Paver Grate - Model #: 6220 - 12" Opening - 72" Square Qty. (1)	CONTACT: BV Associates PHONE: 1.800.496.0487	FINISH: N/A	· Contractor to submit product data for Landscape Architect approval prior to installation · Contractor to install per manufacturer's recommendations; ensure that sand depth does not exceed 1" depth
WOOD	W.01	ITEM: IPE Wood Bench Top THICKNESS: 3/4" BOARD SIZES: 1"x6"	CONTACT: Messmer's Inc. PHONE: 1.800.731.3669	COLOR: Natural FINISH: N/A	· Contractor to submit product data and 1'-0" long sample for Landscape Architect approval prior to installation · Min. spacing to be 1/16" and max. spacing not to exceed 3/8" for decking installation. · All fastners to be stainless steel; ensure alignment of all screws are in line prior to pre-drilling holes · All wood components to receive (2) coats of sealer, Messmer's UV Plus

THE LOCATION OF EXISTING UNDERGROUND UTILITIES ARE SHOWN IN AN APPROXIMATE WAY ONLY. THE CONTRACTOR SHALL DETERMINE THE EXACT LOCATION OF ALL EXISTING UTILITIES BEFORE COMMENCING WORK. HE AGREES TO BE FULLY RESPONSIBLE FOR ANY AND ALL DAMAGES WHICH MIGHT BE OCCASIONED BY HIS FAILURE TO EXACTLY LOCATE AND PRESERVE ANY AND ALL UNDERGROUND UTILITIES.

URBAN FORESTRY SUMMARY

71"	Total tree inches surveyed
63"	Total Appendix F tree inches surveyed
0"	Total tree inches removed, 8"-18" on Appendix F
0"	Total tree inches removed, 8"-18" Not on Appendix F
0"	Total tree inches removed, 19"+ on Appendix F
0"	Total tree inches removed, 19"+ Not on Appendix F
0"	Total heritage tree inches removed
0"	Total non appendix F removed
0"	Total invasive removed
0	Total dead inches removed
18"	Total non mitigation inches planted on site
18"	Total tree inches planted on site

01/21/2021 TREE SURVEY

TREE TABLE

Tag No.	Type	Trunk	Notes
7257	LACEBARK ELM	8"	
8045	SPANISH OAK	18"	
8046	SPANISH OAK	14"	
8047	SPANISH OAK	14"	
8048	SPANISH OAK	17"	

LEGEND

(R) - TREE TO BE REMOVED
(M) - MULTI-TRUNK TREE
(P) - PROTECTED TREE
(H) - HERITAGE TREE
(ROW) - ROW TREE

7708 Rialto Blvd, Suite 125
Austin, Texas 78735
812.552.9114 | 512.765.0314

REGISTERED LANDSCAPE ARCHITECT
ALANDER J. HOWELL
3219
STATE OF TEXAS
03/31/2023

301 CONGRESS AVENUE STREETSCAPE LICENSE AGREEMENT

Austin, Texas

DRAWINGS ISSUED FOR:
LICENSE AGREEMENT

DATE ISSUED
MARCH 31, 2023

REVIEWED BY:
Courtney Tarver | Alex Howell

ORO PROJECT NUMBER:
21057

NUMBER | DRAWING REVISIONS | DATE

LANDSCAPE PLAN AND CALCULATIONS

L1

PLOT: 3/31/2023 6:58:11 PM FILE: C:\Users\MyLocalOneDrive - Oro Design Group\Work_design group\Projects\21052_301 congress_courtyard\02_permit\21052_301_congress_courtyard02_permit\21052_LS_sprnk_sheet\21057_LAND.dwg

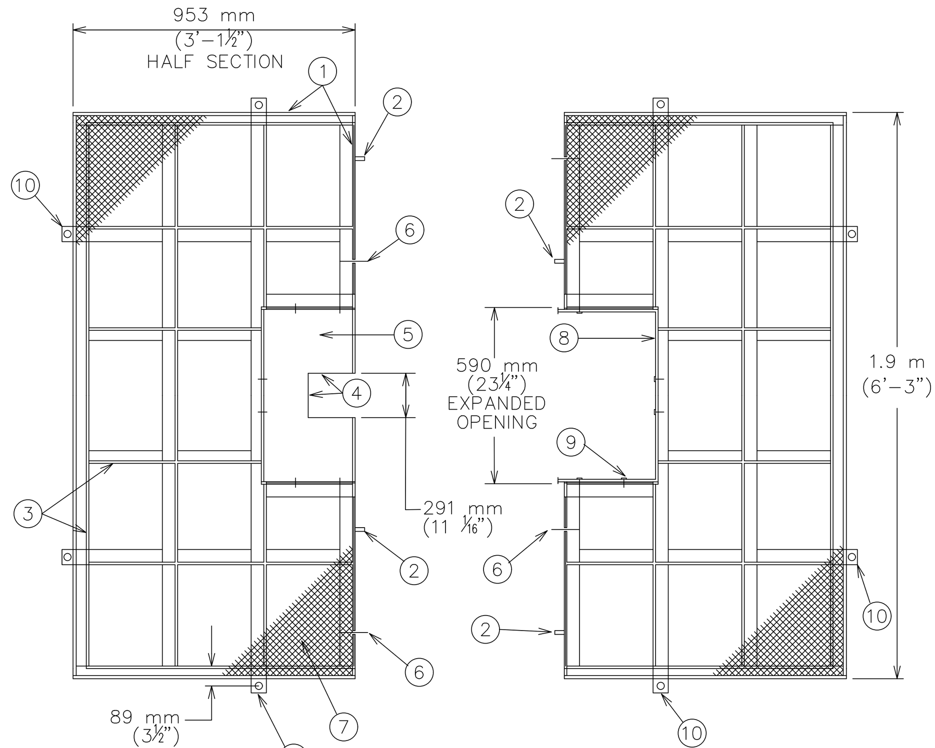

1. 13 mm (½") SQ. STEEL BAR WELDED NEXT TO ALL EXPOSED EXPANDED METAL EDGES
2. 13 mm (?") DIA. STEEL PIN (1 PER SECTION)
3. 64 mm X 50 mm X 5 mm (2?" X 2" X ?") STEEL ANGLE
4. 6 mm X 38 mm (?"X1?") STEEL BAR (STOPS)
5. REMOVABLE 6 mm (?") THICK PLATE TO MAKE 590 mm (23?") OPENING
6. 14 mm (?") DIA. HOLE TO RECEIVE 13 mm (?") DIA. TAPERED STEEL PIN
7. EXPANDED METAL
8. 10 mm X 114 mm (?" X 4?") STEEL BAR EXPANDED
9. 10 mm X 38 mm (⅜" X 1½") STAINLESS STEEL CAP SCREW WITH WASHER AND NUT
10. 64 mm X 50 mm X 5 mm (2½" X 2" X ³⁄₁₆") STEEL ANGLE TAB, 4 PER GRATE HALF TO ALLOW GRATE TO BE BOLTED TO CONCRETE SURROUND

CITY OF AUSTIN DEPARTMENT OF PUBLIC WORKS	1.8 m (6') PAVER GRATE FRAME	
RECORD COPY SIGNED BY BILL GARDNER 06/16/08 ADOPTED	THE ARCHITECT/ENGINEER ASSUMES RESPONSIBILITY FOR APPROPRIATE USE OF THIS STANDARD.	STANDARD NO. 437S–1 1 OF 2

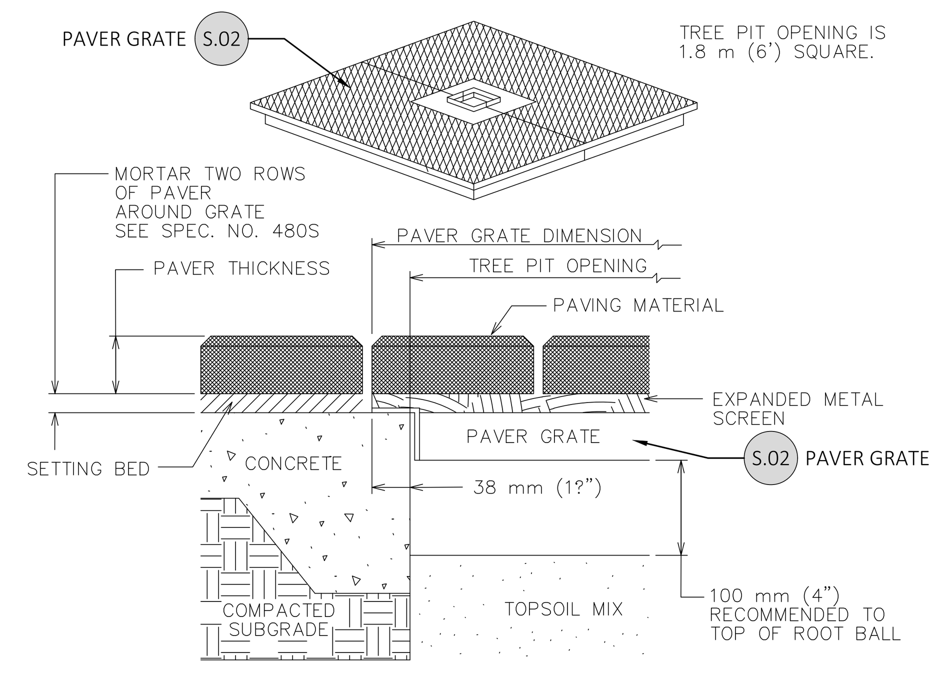

NOTES:
1. PAVER GRATE FRAME SHALL BE FABRICATED IN TWO IDENTICAL HALVES. EACH HALF SHALL WEIGH NO MORE THAN 91 kg (200 lbs).
2. CONTINUOUS WELD ALL INTERSECTIONS.
3. EXPANDED METAL SHALL BE WELDED ON TOP OF FRAME WORK. SPOT WELD AT 150 mm (6") O.C. ON ALL ANGLES.
4. REMOVE ALL SHARP EDGES AND BURRS.
5. THE INSTALLER SHALL FORM AND POUR A CONCRETE SURROUND IN A SQUARE, FLAT PLANE TO PREVENT ROCKING OF THE GRATE. TO ENSURE THE GRATE AND CHOSEN PAVING CONFIGURATION MATERIALS FIT PROPERLY IT IS RECOMMENDED THAT EITHER A FRAME OR TEMPLATE BE USED. IF THE TREE IS TO BE GUYED IT IS ALSO RE-COMMENDED THAT THE EYE BOLTS BE INSTALLED IN THE POURED CONCRETE BELOW THE BOTTOM SUPPORT OF THE GRATE.
6. INSTALL CHOSEN PAVING MATERIALS ON THE GRATE. ENSURE MATERIALS FIT SNUG TO PREVENT ANY MOVEMENT. IF PLACING THE GRATE TO ADJOINING SETTING BED FOR A CONTINUOUS RUN OF PAVERS, ENSURE SETTING BED IS FLUSH WITH TOP EDGE OF THE GRATE.
7. CUT OR TRIM PAVERS AROUND CENTER OPENING, SIDES AND TREE GUY WIRES. IF SAND OR OTHER MATERIAL IS TO BE USED IN FILLING THE PAVER JOINTS A POROUS MAT FABRIC MUST FIRST BE PLACED OVER THE ENTIRE GRATE SURFACE BEFORE INSTALLING THE PAVERS. TRIM OFF ANY EXCESS FABRIC AFTER COMPLETING PAVER INSTALLATION. ANY PENETRATIONS OF THE PAVER INSTALLATION SHALL BE IN CONFORMANCE WITH APPROPRIATE STANDARD DETAIL SERIES 480.

CITY OF AUSTIN DEPARTMENT OF PUBLIC WORKS	1.8 m (6') PAVER GRATE FRAME	
RECORD COPY SIGNED BY BILL GARDNER 06/16/08 ADOPTED	THE ARCHITECT/ENGINEER ASSUMES RESPONSIBILITY FOR APPROPRIATE USE OF THIS STANDARD.	STANDARD NO. 437S–1 2 OF 2

4 PAVER GRATE FRAME

NTS | section

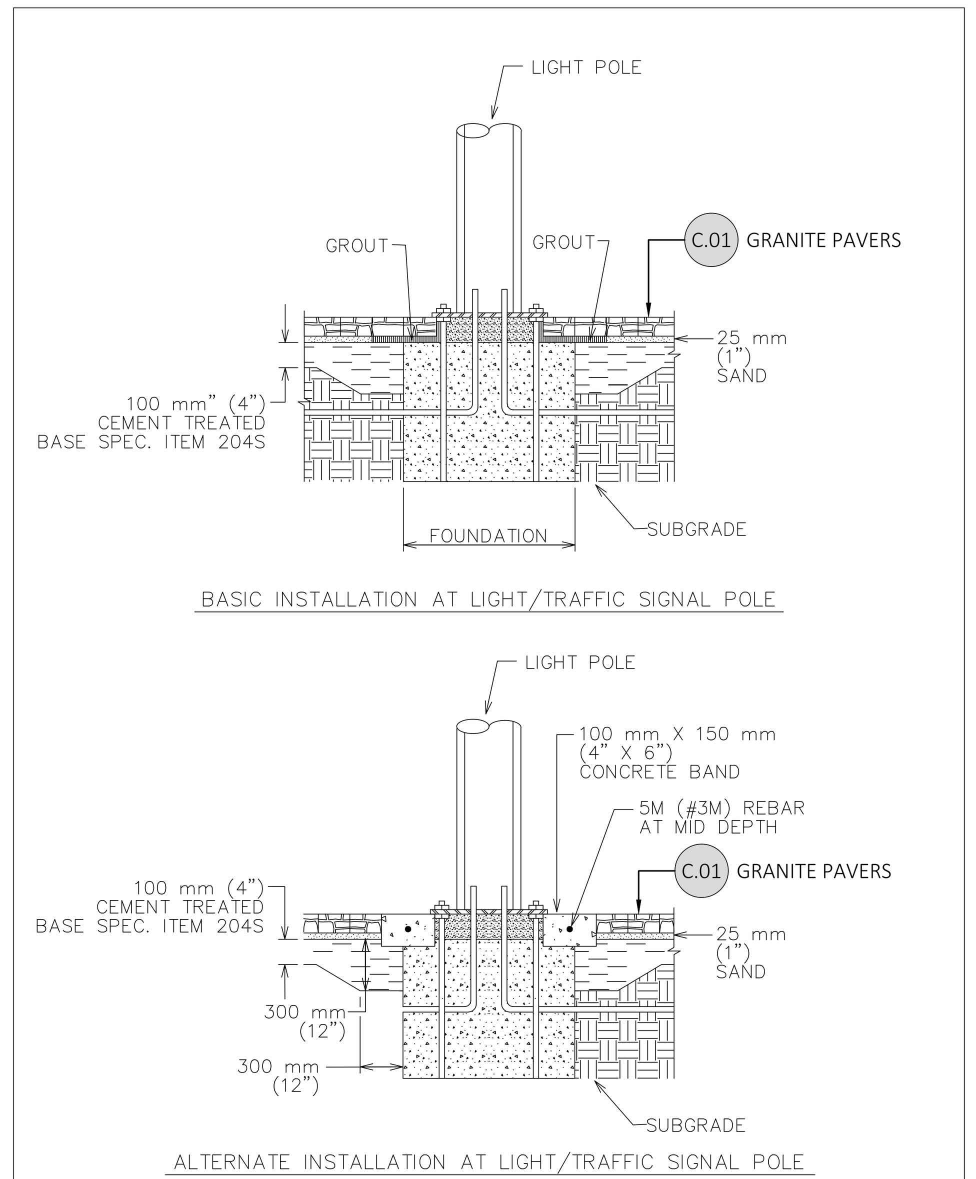

CITY OF AUSTIN DEPARTMENT OF PUBLIC WORKS	SIDEWALK PAVER INSTALLATION–LIGHT POLE/FIXTURE & TRAFFIC SIGNAL POLE	
RECORD COPY SIGNED BY BILL GARDNER 9/14/05 ADOPTED	THE ARCHITECT/ENGINEER ASSUMES RESPONSIBILITY FOR APPROPRIATE USE OF THIS STANDARD.	STANDARD NO. 480S–4 1 OF 2

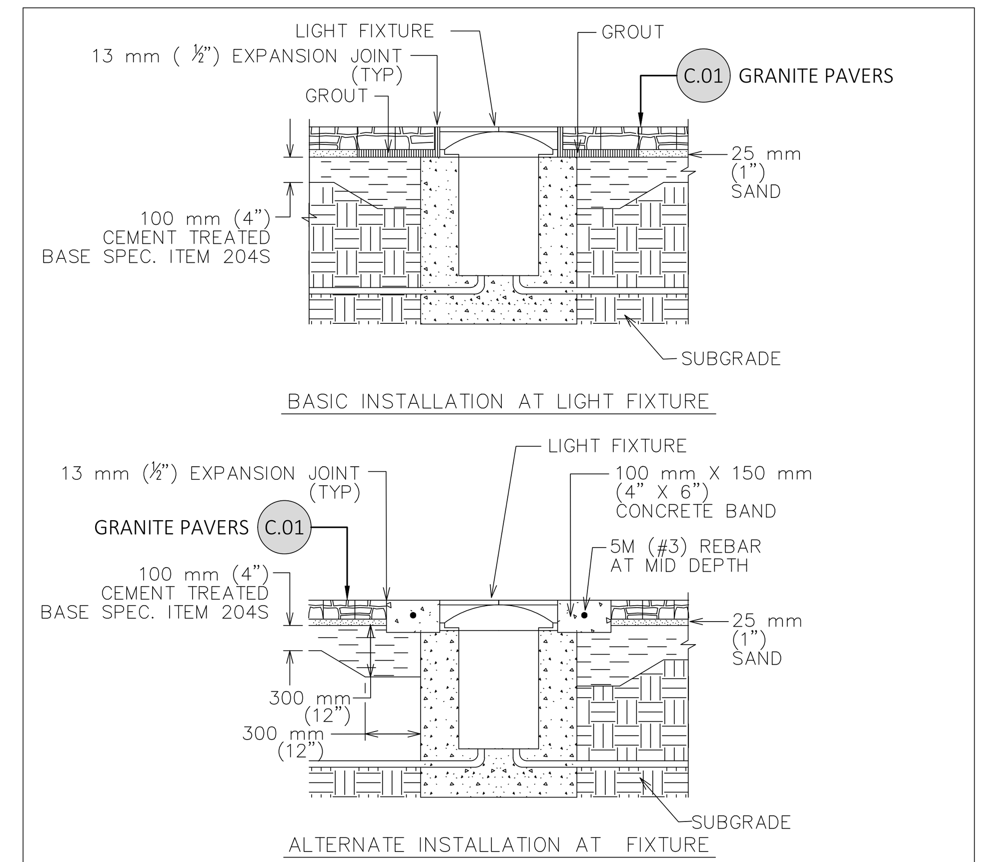

NOTES:
1. THE CONCRETE PAVERS SHALL MEET THE REQUIREMENTS OF STANDARD SPECIFICATION ITEM NO. 480S, "CONCRETE PAVER UNITS".
2. THE GROUT MIX SHALL MEET THE REQUIREMENTS OF SECTION 485S.3.E, 'GROUT MIX' OF STANDARD SPECIFICATION ITEM NO. 485S,"CONCRETE PAVER UNITS FOR SIDEWALK RAMPS".
3. THE FIRST TWO ROWS OF CONCRETE PAVERS ADJACENT TO THE LIGHT POLE/FIXTURE OR TRAFFIC SIGNAL POLE SHALL BE SET IN A 25 mm (1") THICK GROUT LAYER.
4. AS AN ALTERNATE TO SETTING THE FIRST TWO ROWS OF CONCRETE PAVERS IN A GROUT LAYER, A PC CONCRETE BAND (CLASS A, ITEM 403S, "CONCRETE FOR STRUCUTRES"), 100 mm (4") DEEP AND 150 mm (6") WIDE, SHALL BE CONSTRUCTED AROUND THE PERIMETER OF THE LIGHT POLE/FIXTURE OR TRAFFIC SIGNAL POLE.

CITY OF AUSTIN DEPARTMENT OF PUBLIC WORKS	SIDEWALK PAVER INSTALLATION–LIGHT POLE/FIXTURE & TRAFFIC SIGNAL POLE	
RECORD COPY SIGNED BY BILL GARDNER 9/14/05 ADOPTED	THE ARCHITECT/ENGINEER ASSUMES RESPONSIBILITY FOR APPROPRIATE USE OF THIS STANDARD.	STANDARD NO. 480S–4 2 OF 2

3 PAVERS @ LIGHT POLE / UTILITY

NTS | section

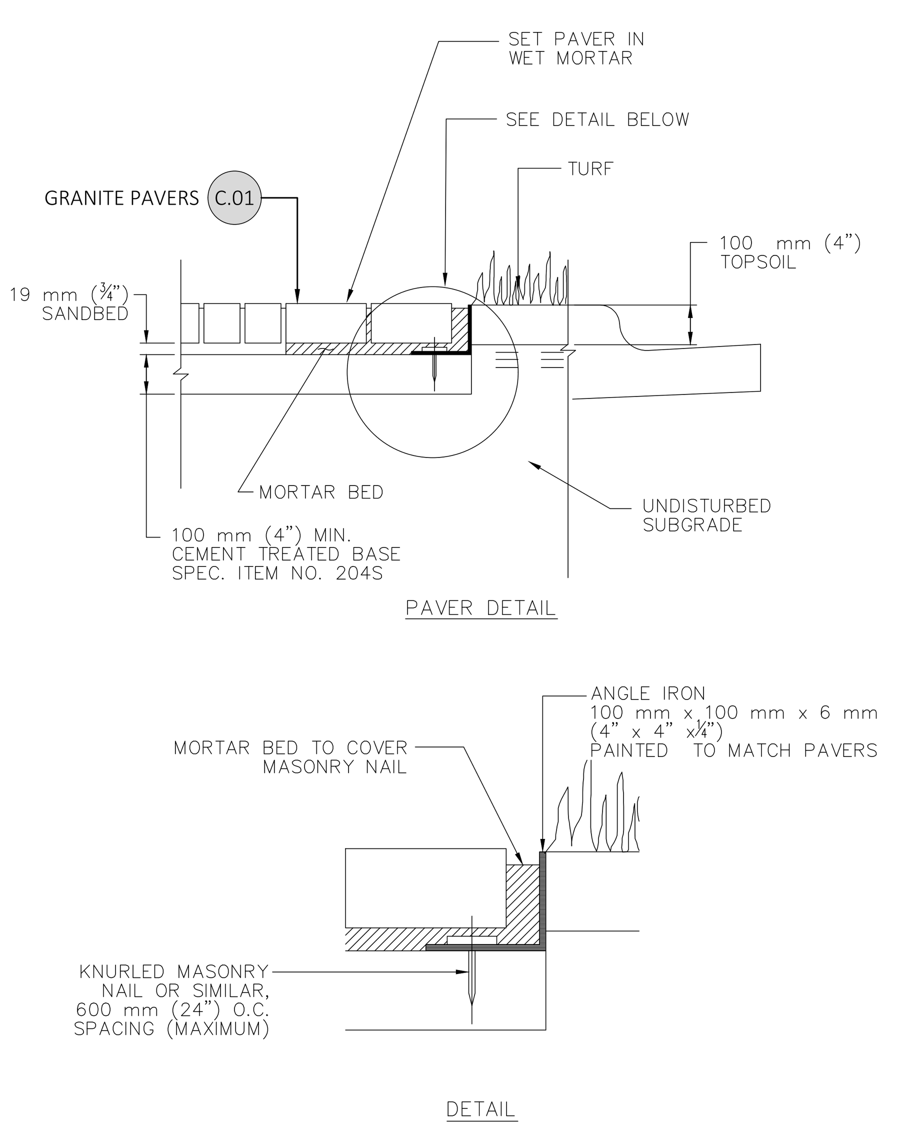

CITY OF AUSTIN DEPARTMENT OF PUBLIC WORKS	SIDEWALK PAVER RESTRAINT	
RECORD COPY SIGNED BY BILL GARDNER 06/21/07 ADOPTED	THE ARCHITECT/ENGINEER ASSUMES RESPONSIBILITY FOR APPROPRIATE USE OF THIS STANDARD.	STANDARD NO. 480S–5A 1 OF 2

NOTES:
1. THE CONCRETE PAVERS SHALL MEET THE REQUIREMENTS OF STANDARD SPECIFICATION ITEM NO. 480S, "CONCRETE PAVER UNITS".
2. THE GROUT MIX SHALL MEET THE REQUIREMENTS OF SECTION 485S.3.E, 'GROUT MIX' OF STANDARD SPECIFICATION ITEM NO. 485S,"CONCRETE PAVER UNITS FOR SIDEWALK RAMPS".
3. EDGE RESTRAINTS SHALL NOT BE INSTALLED ON TOP OF THE BEDDING SAND.
4. THE FIRST TWO ROWS OF CONCRETE PAVERS ADJACENT TO THE BACK OF CURB SHALL BE SET IN A 25 mm (1") THICK GROUT LAYER.
5. AS AN ALTERNATE TO SETTING THE FIRST TWO ROWS OF CONCRETE PAVERS IN A GROUT LAYER, A PC CONCRETE BAND (CLASS A, ITEM 403S, "CONCRETE FOR STRUCTURES"), 100 mm (4") DEEP AND 150 mm (6") WIDE, MAY BE CONSTRUCTED ALONG THE BACK OF CURB.

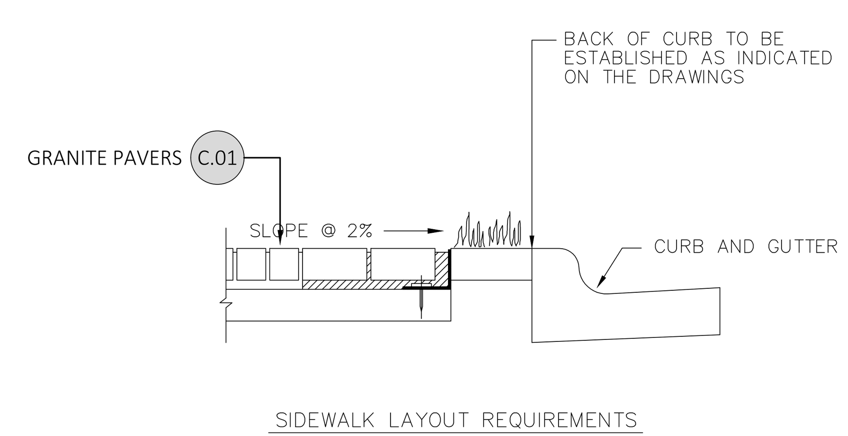

CITY OF AUSTIN DEPARTMENT OF PUBLIC WORKS	SIDEWALK PAVER RESTRAINT	
RECORD COPY SIGNED BY BILL GARDNER 06/21/07 ADOPTED	THE ARCHITECT/ENGINEER ASSUMES RESPONSIBILITY FOR APPROPRIATE USE OF THIS STANDARD.	STANDARD NO. 480S–5A 2 OF 2

2 PAVERS @ LANDSCAPE

NTS | section

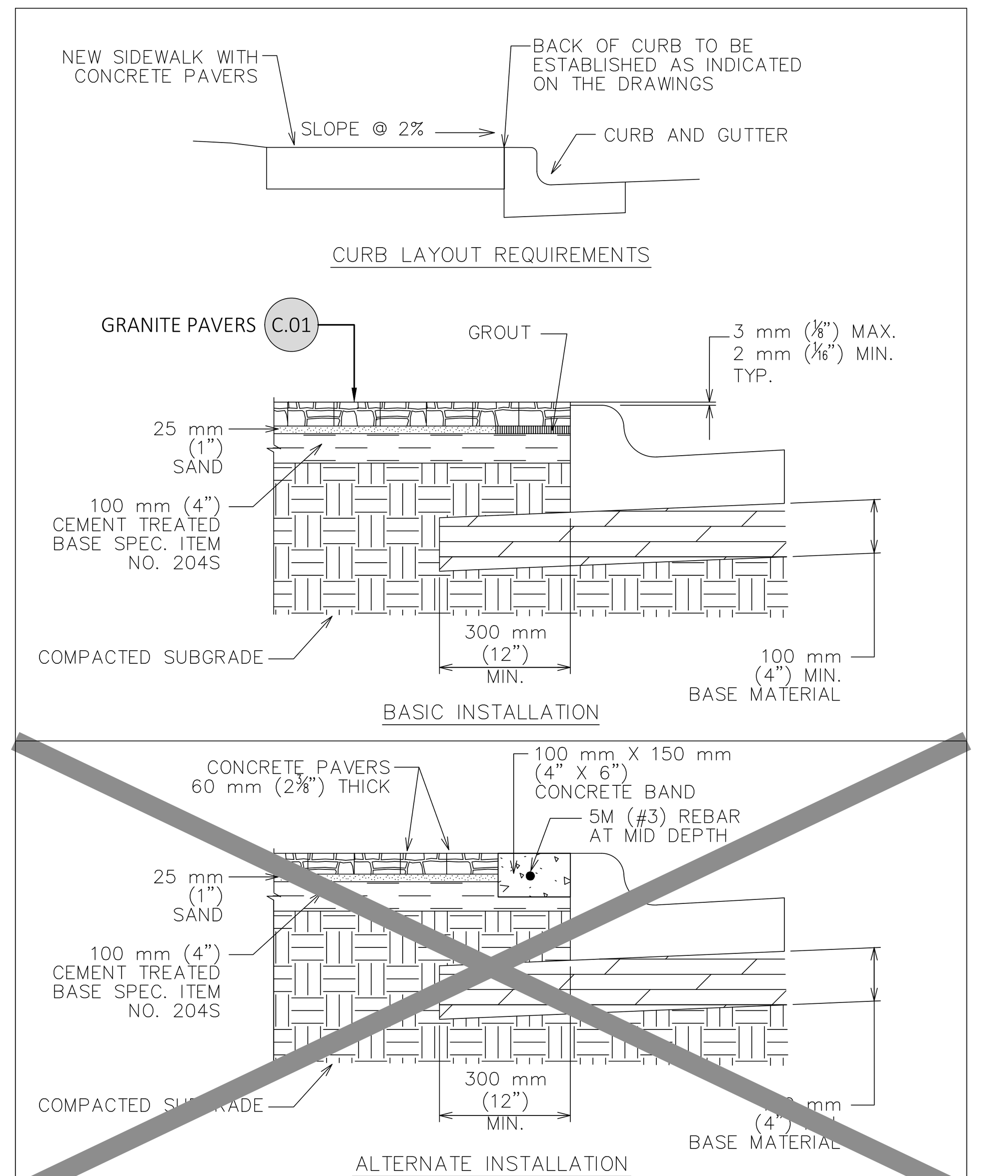

CITY OF AUSTIN DEPARTMENT OF PUBLIC WORKS	SIDEWALK PAVER INSTALLATION– PAVERS ALONG BACK OF CURB	
RECORD COPY SIGNED BY BILL GARDNER 9/14/05 ADOPTED	THE ARCHITECT/ENGINEER ASSUMES RESPONSIBILITY FOR APPROPRIATE USE OF THIS STANDARD.	STANDARD NO. 480S–5 1 OF 2

NOTES:
1. THE CONCRETE PAVERS SHALL MEET THE REQUIREMENTS OF STANDARD SPECIFICATION ITEM NO. 480S, "CONCRETE PAVER UNITS".
2. THE GROUT MIX SHALL MEET THE REQUIREMENTS OF SECTION 485S.3.E, 'GROUT MIX' OF STANDARD SPECIFICATION ITEM NO. 485S,"CONCRETE PAVER UNITS FOR SIDEWALK RAMPS".
3. THE FIRST TWO ROWS OF CONCRETE PAVERS ADJACENT TO THE BACK OF CURB SHALL BE SET IN A 25 mm (1") THICK GROUT LAYER.
4. AS AN ALTERNATE TO SETTING THE FIRST TWO ROWS OF CONCRETE PAVERS IN A GROUT LAYER, A PC CONCRETE BAND (CLASS A, ITEM 403S, "CONCRETE FOR STRUCTURES"), 100 mm (4") DEEP AND 150 mm (6") WIDE, SHALL BE CONSTRUCTED ALONG THE BACK OF CURB.

CITY OF AUSTIN DEPARTMENT OF PUBLIC WORKS	SIDEWALK PAVER INSTALLATION– PAVERS ALONG BACK OF CURB	
RECORD COPY SIGNED BY BILL GARDNER 9/14/05 ADOPTED	THE ARCHITECT/ENGINEER ASSUMES RESPONSIBILITY FOR APPROPRIATE USE OF THIS STANDARD.	STANDARD NO. 480S–5 2 OF 2

1 PAVERS @ CONCRETE CURB

NTS | section

THE LOCATION OF EXISTING UNDERGROUND UTILITIES ARE SHOWN IN AN APPROXIMATE WAY ONLY. THE CONTRACTOR SHALL DETERMINE THE EXACT LOCATION OF ALL EXISTING UTILITIES BEFORE COMMENCING WORK. HE AGREES TO BE FULLY RESPONSIBLE FOR ANY AND ALL DAMAGES WHICH MIGHT BE OCCASIONED BY HIS FAILURE TO EXACTLY LOCATE AND PRESERVE ANY AND ALL UNDERGROUND UTILITIES.

PLOT: 3/31/2023 6:58:50 PM FILE: C:WUsersWjasonWOneDrive - Oro Design GroupWoro design groupWprojectsW21052_301_congress_courtyardW07_permitW03_lic_agree_sheetW21057_LAND.dwg

7708 Rialto Blvd, Suite 125
Austin, Texas 78735

812.552.9114 | 512.765.0314

REGISTERED LANDSCAPE ARCHITECT ALEXANDER J. HOWELL 3219 STATE OF TEXAS
03/31/2023

301 CONGRESS AVENUE STREETSCAPE LICENSE AGREEMENT

Austin, Texas

DRAWINGS ISSUED FOR:
LICENSE AGREEMENT

DATE ISSUED
MARCH 31, 2023

REVIEWED BY:
Courtney Tarver | Alex Howell

ORO PROJECT NUMBER:
21057

NUMBER | DRAWING REVISIONS | DATE

LANDSCAPE DETAILS

L2

NOTES:
1. ALTERNATE DETAILS CAN BE REVIEWED BY THE CITY ARBORIST.
2. STAKING MAY BE USED AT THE DISCRETION OF THE APPLICANT. POST AND TREES ARE TO BE ESTABLISHED WITHOUT HARMING THE TREE (E.G. NON-BINDING STRAPS, POSTS ESTABLISHED OUTSIDE ROOTBALL) BUT ENSURE THAT ALL STAKING MATERIAL IS REMOVED AFTER ONE YEAR.
3. SEE ANSI A300 (PART 1) FOR ADDITIONAL INFORMATION REGARDING PRUNING STANDARDS.
4. SEE ANSI Z60.1 FOR NURSERY STOCK STANDARDS.

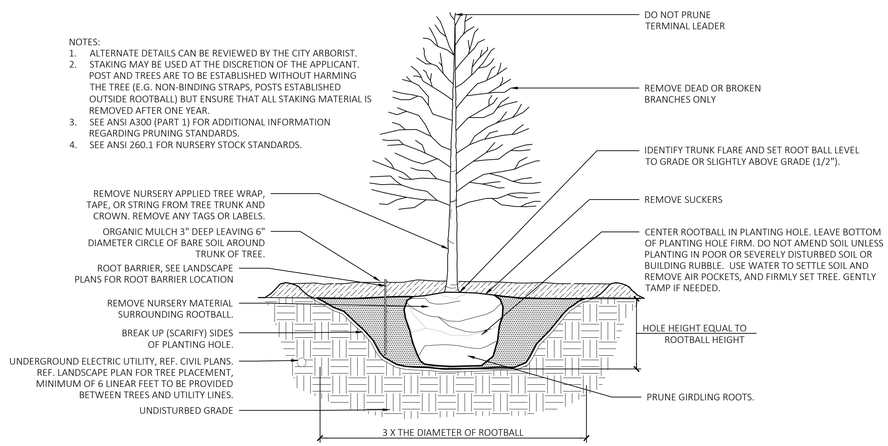

3 TREE PLANTING DETAIL

NTS | section

NOTE:
CONTRACTOR TO SUBMIT SIGNED AND SEALED SHOP DRAWINGS FOR REVIEW PRIOR TO FABRICATION AND INSTALLATION.

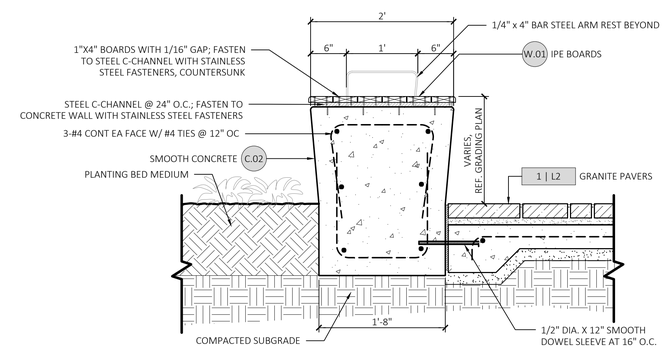

2 WOOD TOP CONCRETE SEAT WALL

1" = 1'-0"| section

NOTES:
1. TREE PLANTINGS ARE NOT ALLOWED IN SIDEWALKS LESS THAN 3.6 m (12') IN WIDTH AS PER TRANSPORTATION CRITERIA MANUAL SECTIONS 6.2.3 A.1 AND 6.2.3.A.2.
2. TREE WELLS SHALL NOT CONFLICT WITH EXISTING OR PROPOSED WATER OR WASTEWATER HORIZONTAL AND VERTICAL SERVICES.
3. 150 mm (6") PERFORATED PIPE (PERFORATIONS ON THE BOTTOM SIDE) WHICH SHALL BE ENCAPSULATED WITH A COARSE AGGREGATE LAYER, FILTER CLOTH AND ROOT BARRIER.

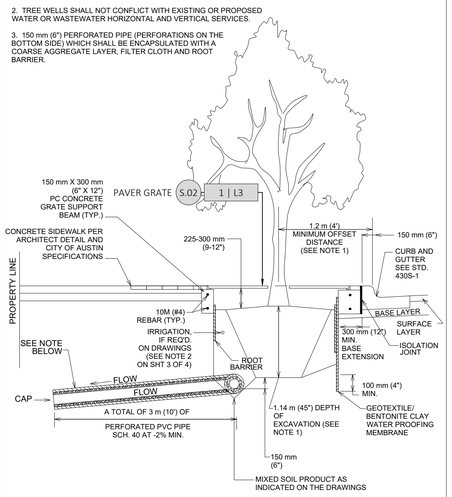

TREE WELL DETAIL FOR GRANULAR SOILS (WITH PI<25)

CITY OF AUSTIN DEPARTMENT OF PUBLIC WORKS		NEW TREES PLANTED WITHIN SIDEWALK 3.6m (12') OR GREATER-GRANULAR SOILS	
RECORD COPY SIGNED BY SAM ANGOORI	01/04/10 ADOPTED	THE ARCHITECT/ENGINEER ASSUMES RESPONSIBILITY FOR APPROPRIATE USE OF THIS STANDARD.	STANDARD NO. 432S-7B 1 OF 4

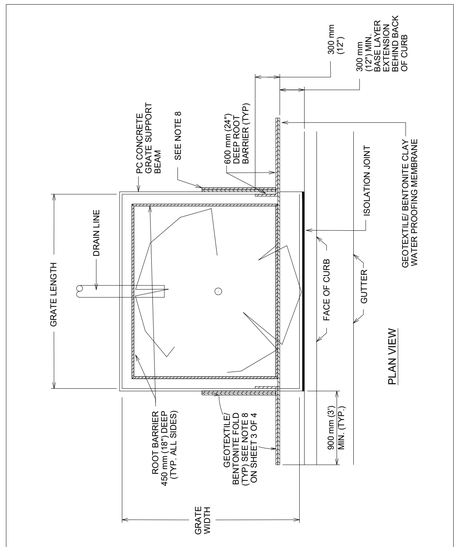

CITY OF AUSTIN DEPARTMENT OF PUBLIC WORKS		NEW TREES PLANTED WITHIN SIDEWALK 3.6m (12') OR GREATER-GRANULAR SOILS	
RECORD COPY SIGNED BY SAM ANGOORI	01/04/10 ADOPTED	THE ARCHITECT/ENGINEER ASSUMES RESPONSIBILITY FOR APPROPRIATE USE OF THIS STANDARD.	STANDARD NO. 432S-7B 2 OF 4

NOTES:
1. THE MINIMUM OFFSET DISTANCE SHALL BE INCREASED UNIFORMLY WHEN THE DEPTH OF EXCAVATION EXCEEDS 1.14 m (45") AS FOLLOWS:

EXCAVATION DEPTH	MINIMUM OFFSET DISTANCE
1.1 m (45") OR LESS	1.2 m (4')
1.3 m (51")	1.4 m (4'-6")
1.5 m (57")	1.5 m (5')
1.6 m (63")	1.7 m (5'-6")
1.7 m (69") OR GREATER	1.8 m (6')

2. IRRIGATION SHALL COMPLY WITH REQUIREMENTS IN THE LAND DEVELOPMENT CODE SECTION 25-2-1008 AND ENVIRONMENTAL CRITERIA MANUAL SECTIONS 2.4.6 AND 2.7.2.G.
3. DRAINAGE SHALL BE DESIGNED/CONSTRUCTED TO PROVIDE INDEPENDENT DRAINAGE OF THE SPECIFIC TREE WELL BY GRAVITY FLOW.
4. LIGHTING AND ASSOCIATED ELECTRICAL INSTALLATIONS SHALL BE IN ACCORDANCE WITH THE DRAWINGS.
5. TREE WELL EXCAVATIONS SHALL BE INSTALLED NO CLOSER THAN 3 m (10') TO CONTIGUOUS PROPERTY CORNERS.
6. SHOULD MAINTENANCE OR REPAIR OF WATER, WASTEWATER SERVICES OR FIRE LINES BE NECESSARY, LICENSE HOLDERS ARE RESPONSIBLE FOR MAINTENANCE OR REPLACEMENT OF GEOTEXTILE OR BENTONITE CLAY MEMBRANE.
7. TREE SPACING MUST BE SHOWN ON THE DRAWINGS.
8. ALTERNATE PLACEMENT OF GEOTEXTILE/BENTONITE FOR TREE SPACING LESS THAN 4.5m (15').

CITY OF AUSTIN DEPARTMENT OF PUBLIC WORKS		NEW TREES PLANTED WITHIN SIDEWALK 3.6m (12') OR GREATER-GRANULAR SOILS	
RECORD COPY SIGNED BY SAM ANGOORI	01/04/10 ADOPTED	THE ARCHITECT/ENGINEER ASSUMES RESPONSIBILITY FOR APPROPRIATE USE OF THIS STANDARD.	STANDARD NO. 432S-7B 3 OF 4

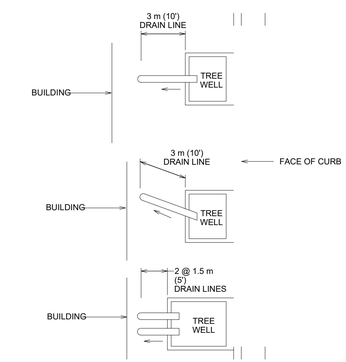

PLACEMENT OPTIONS OF DRAIN LINES

CITY OF AUSTIN DEPARTMENT OF PUBLIC WORKS		NEW TREES PLANTED WITHIN SIDEWALK 3.6m (12') OR GREATER-GRANULAR SOILS	
RECORD COPY SIGNED BY SAM ANGOORI	01/04/10 ADOPTED	THE ARCHITECT/ENGINEER ASSUMES RESPONSIBILITY FOR APPROPRIATE USE OF THIS STANDARD.	STANDARD NO. 432S-7B 4 OF 4

1 TREE WELL WITHIN SIDEWALK

NTS | section

THE LOCATION OF EXISTING UNDERGROUND UTILITIES ARE SHOWN IN AN APPROXIMATE WAY ONLY. THE CONTRACTOR SHALL DETERMINE THE EXACT LOCATION OF ALL EXISTING UTILITIES BEFORE COMMENCING WORK. HE AGREES TO BE FULLY RESPONSIBLE FOR ANY AND ALL DAMAGES WHICH MIGHT BE OCCASIONED BY HIS FAILURE TO EXACTLY LOCATE AND PRESERVE ANY AND ALL UNDERGROUND UTILITIES.

7708 Rialto Blvd, Suite 125
Austin, Texas 78735
812.552.9114 | 512.765.0314

REGISTERED LANDSCAPE ARCHITECT
ALEXANDER J. HOWELL
3219
STATE OF TEXAS
03/31/2023

301 CONGRESS AVENUE STREETSCAPE LICENSE AGREEMENT

Austin, Texas

DRAWINGS ISSUED FOR:
LICENSE AGREEMENT

DATE ISSUED
MARCH 31, 2023

REVIEWED BY:
Courtney Tarver | Alex Howell

ORO PROJECT NUMBER:
21057

NUMBER | DRAWING REVISIONS | DATE

LANDSCAPE DETAILS

L3

PLOT: 3/31/2023 6:59:08 PM FILE: C:\Users\MyLocalOneDrive - Oro Design Group\Acon_design_group\Projects\21052_301_congress_courtyard\02_permit\053_lc_spree_sheet\21057_LAND.dwg

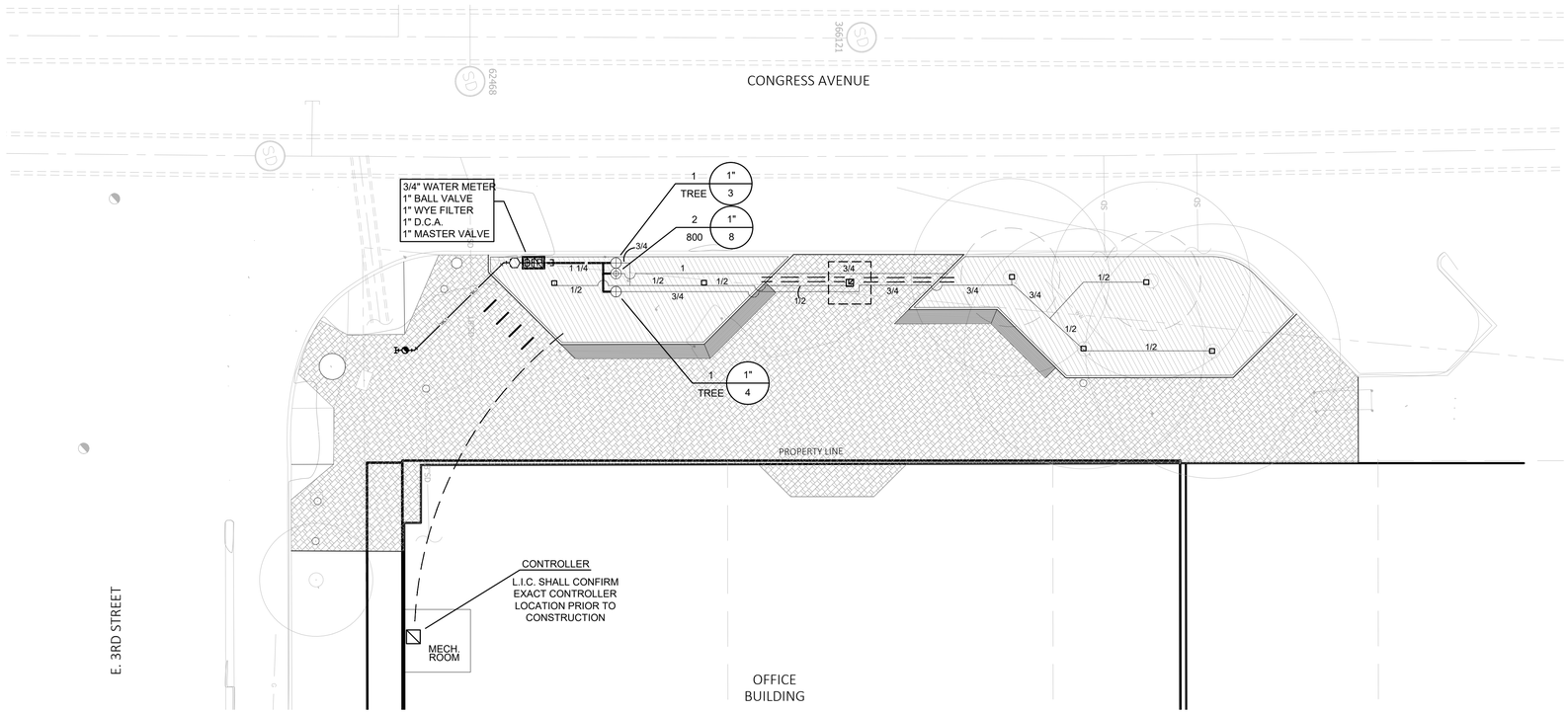

SCALE: 1"=10'-0"

APPENDIX O : - LANDSCAPE / IRRIGATION NOTES

SITE DEVELOPMENT PERMIT - IRRIGATION NOTES

AUTOMATIC IRRIGATION SYSTEMS SHALL COMPLY WITH TCEQ CHAPTER 344, AS WELL AS THE FOLLOWING REQUIREMENTS:

1. THESE REQUIREMENTS SHALL BE NOTED ON THE SITE DEVELOPMENT PERMIT AND SHALL BE IMPLEMENTED AS PART OF THE LANDSCAPE INSPECTION:
   - A. THE SYSTEM MUST PROVIDE A MOISTURE LEVEL ADEQUATE TO SUSTAIN GROWTH OF THE PLANT MATERIALS;
   - B. THE SYSTEM DOES NOT INCLUDE SPRAY IRRIGATION ON AREAS LESS THAN TEN (10) FEET WIDE (SUCH AS MEDIANS, BUFFER STRIPS, AND PARKING LOT ISLANDS) ;
   - C. CIRCUIT REMOTE CONTROL VALVES HAVE ADJUSTABLE FLOW CONTROLS;
   - D. SERVICEABLE IN-HEAD CHECK VALVES ARE ADJACENT TO PAVED AREAS WHERE ELEVATION DIFFERENCES MAY CAUSE LOW HEAD DRAINAGE;
   - E. A MASTER VALVE INSTALLED ON THE DISCHARGE SIDE OF THE BACKFLOW PREVENTER;
   - F. ABOVE-GROUND IRRIGATION EMISSION DEVICES ARE SET BACK AT LEAST SIX (6) INCHES FROM IMPERVIOUS SURFACES;
   - G. AN AUTOMATIC RAIN SHUT-OFF DEVICE SHUTS OFF THE IRRIGATION SYSTEM AUTOMATICALLY AFTER MORE THAN A ONE-HALF (1/2") RAINFALL; AND
   - H. NEWLY PLANTED TREES SHALL HAVE PERMANENT IRRIGATION CONSISTING OF DRIP OR BUBBLERS.
2. THE IRRIGATION INSTALLER SHALL DEVELOP AND PROVIDE AN AS-BUILT DESIGN PLAN TO THE CITY AT THE TIME THE FINAL IRRIGATION INSPECTION IS PERFORMED;
   - A. UNLESS FISCAL SECURITY IS PROVIDED TO THE CITY FOR THE INSTALLATION OF THE SYSTEM, IT MUST BE OPERATIONAL AT THE TIME OF THE FINAL LANDSCAPE INSPECTION.
3. THE IRRIGATION INSTALLER SHALL ALSO PROVIDE EXHIBITS TO BE PERMANENTLY INSTALLED INSIDE OR ATTACHED TO THE IRRIGATION CONTROLLER, INCLUDING:
   - A. A LAMINATED COPY OF THE WATER BUDGET CONTAINING ZONE NUMBERS, PRECIPITATION RATE, AND GALLONS PER MINUTE; AND A ZONE MAP WITH THE ISOLATION VALVE LOCATION.
4. THE IRRIGATION INSTALLER SHALL PROVIDE A REPORT TO THE CITY ON A FORM PROVIDED BY AUSTIN WATER CERTIFYING COMPLIANCE WITH SUBSECTION 1. WHEN THE FINAL PLUMBING INSPECTION IS PERFORMED BY THE CITY.

IRRIGATION LEGEND

- HUNTER PROS-06-PRS30 SERIES POP UP SPRAY HEADS WITH HUNTER MSBN-50H STREAM BUBBLER NOZZLES. (TWO PER TREE) SEE INSTALLATION NOTE #13 REGARDING TREE BUBBLER LATERAL PIPE
- HUNTER RZWS ROOT WATERING SYSTEM MODEL RZWS-10-50-CV WITH RZWS-SLEEVE. (TWO PER TREE) SEE INSTALLATION NOTE #13 REGARDING TREE BUBBLER LATERAL PIPE
- NETAFIM TECHLINE TLHCVXR5-12 SERIES DRIP TUBE IN SHRUB BED INSTALLED AT 2" DEPTH SEE INSTALLATION NOTE #16 REGARDING DRIP TUBE LAYOUT IN SHRUB BEDS.
- HUNTER ICV SERIES ELECTRIC REMOTE CONTROL, "TREE BUBBLER ZONE" VALVE SEE INSTALLATION NOTE #13 REGARDING TREE BUBBLER LATERAL PIPE
- NETAFIM CONTROL ZONE KIT MODEL #NCZ-1S SERIES WITH 50 PSI PRESSURE REGULATOR AND SCREEN FILTER
- ZURN / WILKINS 350 SERIES D.C.A. INSTALLED PER CITY CODE, WITH SAME SIZE ZURN / WILKINS 850 SERIES BRONZE BALL VALVE AND ZURN / WILKINS YB SERIES BRONZE WYE FILTER WITH 20 MESH STAINLESS STEEL SCREEN
- IRRIGATION WATER METER AND TAP, SIZE AS NOTED ON THE PLAN
- HUNTER HYDRAWISE HCC SERIES AUTOMATIC CONTROLLER MODEL #HCC-800-M WITH WIFI-EXT-KIT AND WIRELESS SOLAR SYNC SENSOR RAIN / FREEZE SENSOR. LOCATE SENSOR AS FIELD DIRECTED BY THE LANDSCAPE ARCHITECT
- "MASTER" ELECTRIC VALVE
- CLASS 200 PVC MAINLINE PIPE
- CLASS 200 (EXCEPT 1/2 INCH #315) PVC LATERAL PIPE
- ONE 4" CLASS 200 SLEEVE PIPE
- TWO 4" CLASS 200 SLEEVE PIPES
- 1 1/2" PVC CONDUIT WITH LONG RADIUS SWEEP FITTINGS

L.I.C. SHALL SELECT SPRAY NOZZLES FOR "HEAD-TO-HEAD" COVERAGE, ADJUSTED FOR NO OVERSPRAY ONTO WALLS AND WALKS. NO OVERSPRAY INTO STREETS IS PERMITTED.

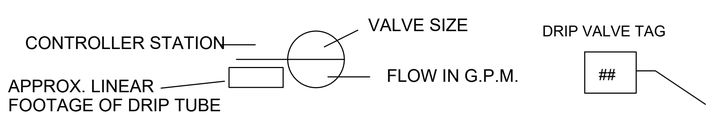

THE LOCATION OF EXISTING UNDERGROUND UTILITIES ARE SHOWN IN AN APPROXIMATE WAY ONLY. THE CONTRACTOR SHALL DETERMINE THE EXACT LOCATION OF ALL EXISTING UTILITIES BEFORE COMMENCING WORK. HE AGREES TO BE FULLY RESPONSIBLE FOR ANY AND ALL DAMAGES WHICH MIGHT BE OCCASIONED BY HIS FAILURE TO EXACTLY LOCATE AND PRESERVE ANY AND ALL UNDERGROUND UTILITIES.

IRRIGATION IN TEXAS IS REGULATED BY THE TEXAS COMMISSION ON ENVIRONMENTAL QUALITY (TCEQ) (MC-178) P.O. BOX 13087 T.C.E.Q.'S WEB SITE IS: WWW.TCEQ.STATE.TX.US

STATE OF TEXAS
CHRISTOPHER DIGGS
11031
LICENSED IRRIGATOR
03 / 31 / 2023

James Pole
IRRIGATION CONSULTANTS
IRRIGATION DESIGN, CONSULTING, AND LANDSCAPE WATER MANAGEMENT

TEXAS L.I.C. #658
100 N. LOCUST ST., SUITE 3
DENTON, TEXAS 76201
OFFICE: 940.243.2364
FAX: 940.382.2475
james@jamespoleirrigation.com

7708 Rialto Blvd, Suite 125
Austin, Texas 78735
812.552.9114 | 512.765.0314

REGISTERED LANDSCAPE ARCHITECT
ALANDER J. HOWELL
3219
STATE OF TEXAS
03/31/2023

301 CONGRESS AVENUE STREETSCAPE LICENSE AGREEMENT

Austin, Texas

DRAWINGS ISSUED FOR:
LICENSE AGREEMENT

DATE ISSUED
MARCH 31, 2023

REVIEWED BY:
Courtney Tarver | Alex Howell

ORO PROJECT NUMBER:
21057

NUMBER | DRAWING REVISIONS | DATE

IRRIGATION PLAN

L4

PLOT: 3/31/2023 7:02:27 PM FILE: C:\Users\Jason\AppData\Local\Microsoft\Windows\INetCache\Content.Outlook\WWW0\E5W21057_IR01.dwg

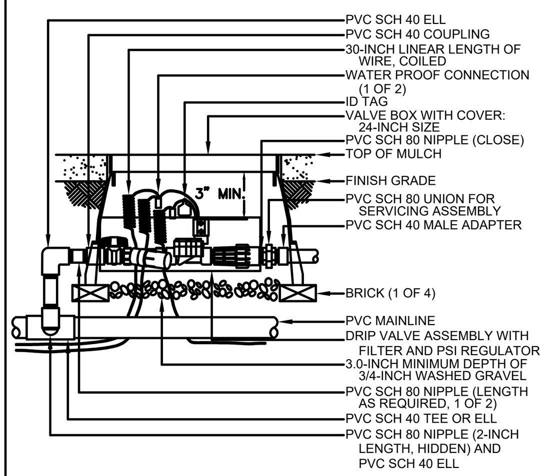

CONTROL ZONE KIT

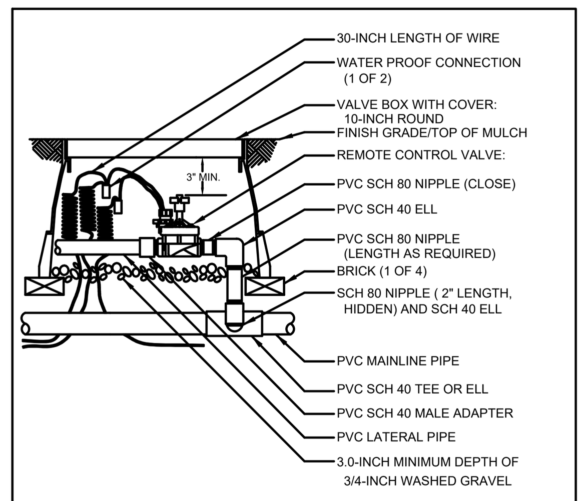

REMOTE CONTROL VALVE

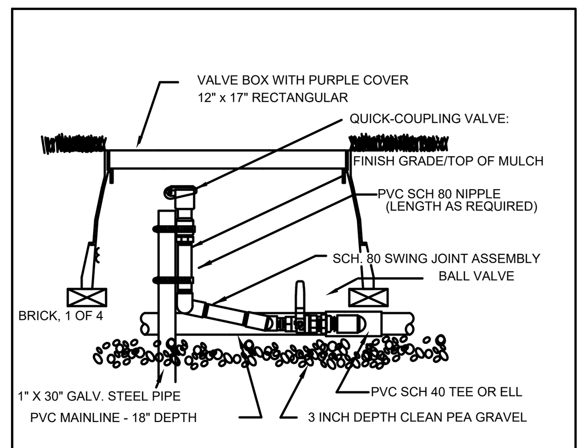

QUICK COUPLER VALVE
WITH PVC BALL VALVE

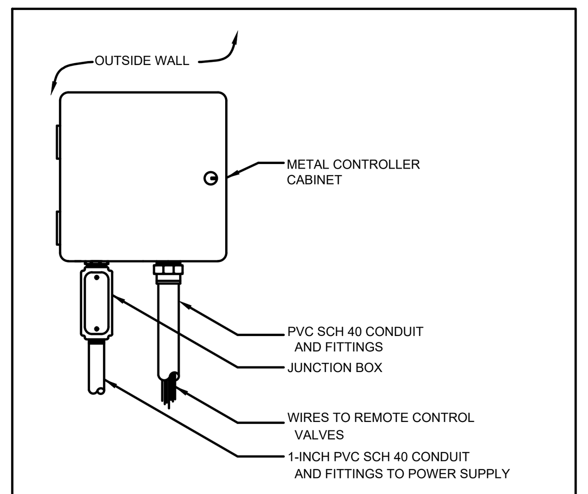

WALL MOUNT CONTROLLER

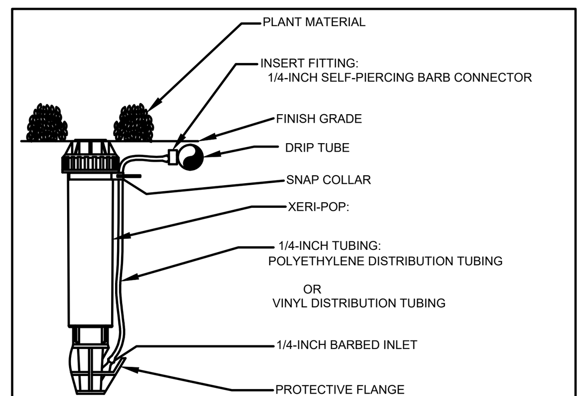

NOTE:
USE XERIMAN TOOL XM-TOOL TO INSERT BARB CONNECTOR DIRECTLY INTO 1/2-INCH POLYETHYLENE TUBING.
LOCATE AT FURTHEST DISTANCE FROM DRIP VALVE ASSEMPLY, ADJACENT TO EDGING OR WITHIN LOW PLANTINGS FOR OPTIMUM VIEWING. WITH CLOSED SPRAY NOZZLE.

DRIP ZONE INDICATOR

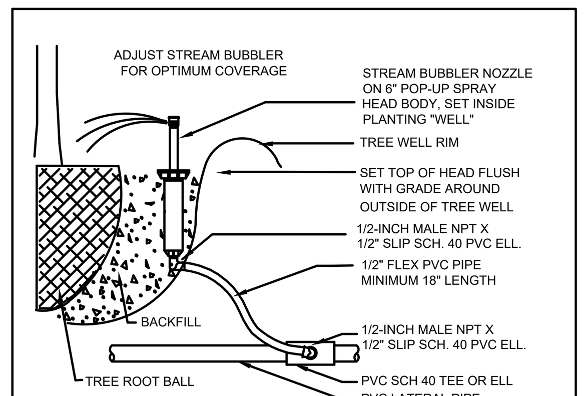

INCLUDE TWO BUBBLER HEADS, SET ON OPPOSITE SIDES OF ROOT BALL

TREE BUBBLER

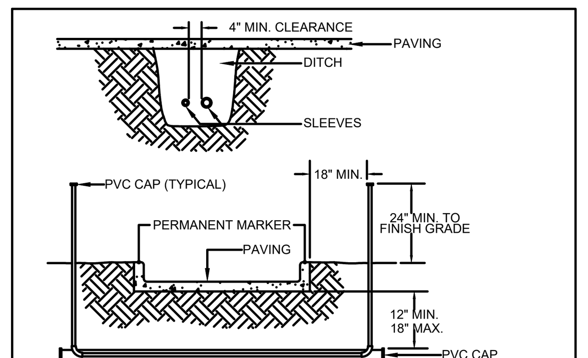

NOTES:
1. ALL PVC IRRIGATION SLEEVES TO BE CLASS 200 PIPE.
2. ALL JOINTS TO BE SOLVENT WELDED AND WATERTIGHT.
3. WHERE THERE IS MORE THAN ONE SLEEVE, EXTEND THE SMALLER SLEEVE TO 24-INCHES MINIMUM ABOVE FINISH GRADE.
4. MECHANICALLY TAMP TO 95% PROCTOR.
5. SLEEVE LOCATIONS SHALL BE MARKED ONTO THE TOP OF CURB WITH A SAWCUT OF TWO PARALLEL LINES THAT ARE 2" LONG AND 1" APART.

SLEEVING

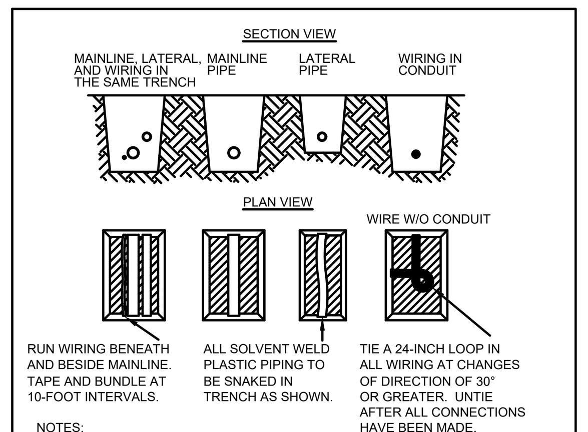

NOTES:
1. SLEEVE BELOW ALL HARDSCAPE ELEMENTS WITH CLASS 200 PVC TWICE THE DIAMETER OF THE PIPE OR WIRE BUNDLE WITHIN.
2. FOR PIPE AND WIRE BURIAL DEPTHS SEE SPECIFICATIONS.

TRENCH DETAIL

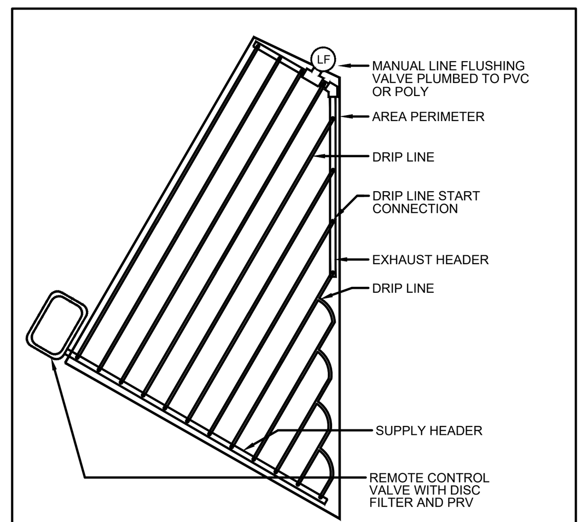

SUPPLY AND EXHAUST HEADERS SHALL BE CLASS 200 PVC PIPE, OF THE SAME DIAMETER AS THE ZONE VALVE SIZE.

USE DRIP TUBE FOR SUPPLY AND EXHAUST HEADERS ON GRIDS WITH FLOW SMALLER THAN 5 GPM ONLY.

IRREGULAR AREA DRIP LAYOUT

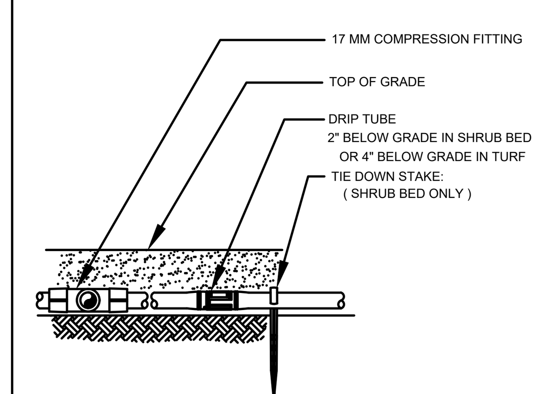

DRIP TUBE

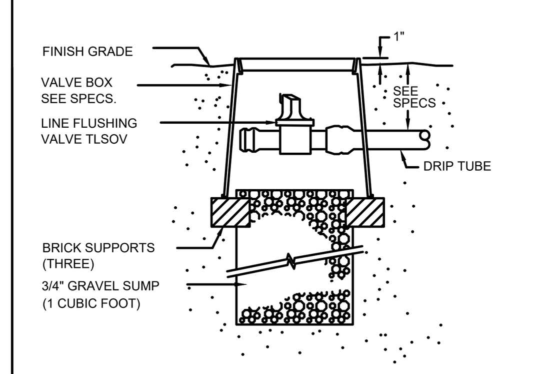

MANUAL LINE FLUSH VALVE

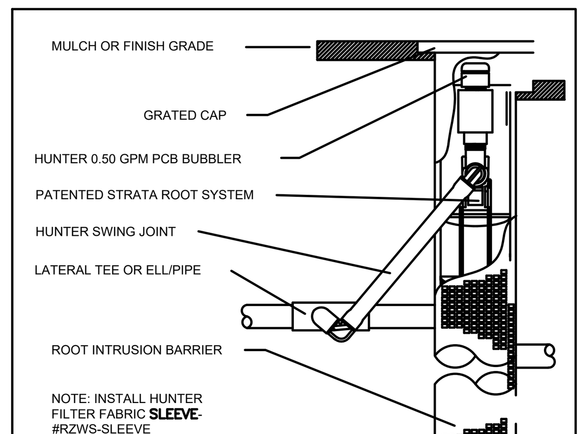

ROOT WATERING SYSTEM
(TWO PER TREE)

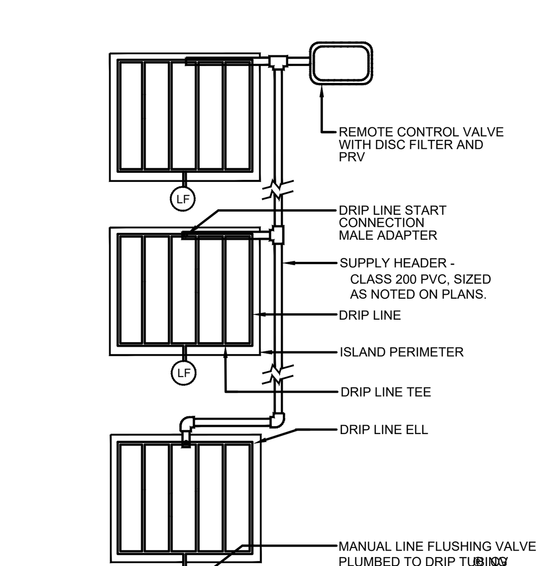

USE DRIP TUBE FOR SUPPLY AND EXHAUST HEADERS ON GRIDS WITH FLOW SMALLER THAN 5 GPM ONLY.

DRIP ISLAND LAYOUT

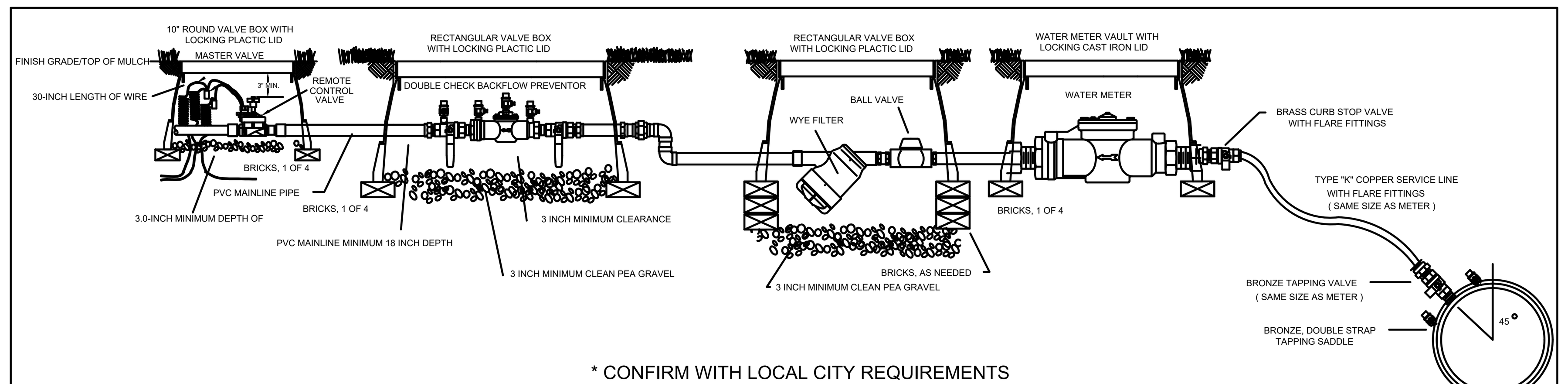

* CONFIRM WITH LOCAL CITY REQUIREMENTS

WATER TAP WITH METER, BALL VALVE, WYE FILTER, BACKFLOW ASSEMBLY, AND MASTER VALVE

INSTALLATION NOTES

1. COORDINATE IRRIGATION INSTALLATION WITH PLANTING PLAN AND SITE CONDITIONS TO PROVIDE COMPLETE COVERAGE WITH MINIMUM OVERSPRAY. THE IRRIGATION CONTRACTOR SHALL MAKE MINOR ADJUSTMENTS TO ENSURE PROPER COVERAGE AT NO ADDITIONAL COST TO THE OWNER. THE IRRIGATION CONTRACTOR SHALL COMPLY WITH ALL LOCAL AND STATE MANDATED IRRIGATION ORDINANCES AND CODES, AND WILL SECURE ALL REQUIRED PERMITS. L.I.C. SHALL PAY ANY ASSOCIATED FEES UNLESS OTHERWISE NOTED. ALL LOCAL CODES SHALL PREVAIL OVER ANY DISCREPANCIES HEREIN AND SHALL BE ADDRESSED BEFORE ANY CONSTRUCTION BEGINS.
2. NO MACHINE TRENCHING SHALL BE PERMITTED WITHIN THE ROOT ZONE OF EXISTING TREES. HAND-DIG ONLY, WITHIN THE ROOT ZONES OF EXISTING TREES. NO ROOTS OVER 1" DIAMETER SHALL BE CUT. STAKE ALL PROPOSED TRENCH ROUTES NEAR EXISTING TREES FOR APPROVAL BY THE LANDSCAPE ARCHITECT BEFORE DIGGING BEGINS.
3. CONFIRM MINIMUM STATIC WATER PRESSURE OF 65 PSI AT THE HIGHEST ELEVATION OF THE SYSTEM LIMITS, AND MAXIMUM STATIC WATER PRESSURE OF 90 P.S.I. AT THE LOWEST ELEVATION OF THE SYSTEM LIMITS AT LEAST 7 DAYS BEFORE BEGINNING WORK. IF STATIC WATER PRESSURE IS OUTSIDE THE RANGE STATED ABOVE, DO NOT PROCEED UNTIL DIRECTED BY THE LANDSCAPE ARCHITECT.
4. LATERAL PIPE SHALL BE INSTALLED AT A MINIMUM DEPTH OF 12 INCHES. MAINLINE PIPE AND WIRES SHALL BE INSTALLED AT A MINIMUM DEPTH OF 18 INCHES. NO MACHINE TRENCHING SHALL BE PERMITTED WITHIN EXISTING TREE ROOT ZONES. WHEN HAND - TRENCHING WITHIN EXISTING TREE ROOT ZONES, NO ROOTS LARGER THAN 1" DIAMETER SHALL BE CUT.
5. UNSLEEVED PIPES MAY BE SHOWN UNDER PAVEMENT FOR GRAPHIC CLARITY ONLY. INSTALL THESE PIPES IN ADJACENT LANDSCAPED AREAS.
6. ELECTRIC POWER SHALL BE PROVIDED WITHIN FIVE FEET OF CONTROLLER LOCATION BY GENERAL CONTRACTOR. L.I.C. TO PROVIDE FINAL HARD-WIRE TO CONTROLLER.
7. 24 VOLT VALVE WIRE SHALL BE A MINIMUM OF #14 GAUGE, U.F. APPROVED FOR DIRECT BURIAL, SINGLE CONDUCTOR "IRRIGATION WIRE". WIRE SPLICES SHALL INCLUDE DBY CONNECTORS AS MANUFACTURED BY 3M COMPANY. ALL FIELD SPLICES SHALL BE LOCATED IN A ROUND VALVE BOX OF SUFFICIENT SIZE TO ALLOW INSPECTION.
8. VALVE BOXES SHALL BE INSTALLED FLUSH WITH GRADE, SUPPORTED BY BRICKS IF NEEDED, WITH 3 INCHES OF CLEAN PEA GRAVEL LOCATED BELOW THE VALVE. USE 12" x 17" RECTANGULAR VALVE BOXES WITH PURPLE LID FOR QUICK COUPLING VALVES, AND 10" ROUND BOXES FOR ELECTRIC VALVES UNLESS NOTED OTHERWISE. D.C.A., WITH UPSTREAM BALL VALVE AND WYE FILTER SHALL BE BOXED AND LOCATED ACCORDING TO LOCAL CODE.
9. USE RIGID SCH. 80 PVC SWING JOINT ASSEMBLIES TO CONNECT ALL ROTARY HEADS AND QUICK COUPLERS.
10. ALL SPRAY HEADS SHALL BE CONNECTED WITH A 12" MINIMUM LENGTH OF 1/2" FLEX PVC. THE FLEX PVC SHALL BE SOLVENT WELDED TO SCHEDULE 40 PVC FITTINGS WITH WELD-ON #795 SOLVENT AND #P-70 PRIMER.
11. PROVIDE ONE QUICK COUPLER KEY WITH SWIVEL HOSE ELL FOR EVERY SIX Q.C. VALVES. (MINIMUM ONE SET).
12. CONTRACTOR IS TO CONTACT APPROPRIATE AUTHORITIES AND LOCATE ALL UTILITIES PRIOR TO CONSTRUCTION.
13. LATERAL PIPE TO TREE STREAM BUBBLER HEADS IS OMITTED FOR GRAPHIC CLARITY. CONNECT TREE BUBBLER HEADS TO VALVES AS SHOWN WITH CLASS 200 PVC PIPE SIZED TO ALLOW A MAXIMUM FLOW VELOCITY OF 5 FEET PER SECOND
14. THE PROPOSED LOCATIONS OF ALL ABOVE- GROUND EQUIPMENT INCLUDING BACKFLOW PREVENTORS, CONTROLLERS AND WEATHER SENSORS SHALL BE STAKED BY THE CONTRACTOR FOR APPROVAL BY THE LANDSCAPE ARCHITECT OR OWNER'S REPRESENTATIVE BEFORE THESE ITEMS ARE INSTALLED.
15. ALL HEADS SHALL BE INSTALLED A MINIMUM OF 4" FROM PAVEMENT EDGES. (6" OR GREATER WHERE REQUIRED BY LOCAL CODE) FINAL HEAD ADJUSTMENTS BY THE CONTRACTOR SHALL INCLUDE THE ADDITION OF CHECK VALVES WHERE NEEDED TO PREVENT EXCESSIVE LOW HEAD DRAINAGE. THE CONTRACTOR SHALL BUDGET FOR, AND INSTALL CHECK VALVES FOR UP 10 % OF THE TOTAL NUMBER OF HEADS WHEN NEEDED, WITH NO ADDITIONAL COST TO THE OWNER.
16. WHERE SHOWN ON THE PLANS, MASS SHRUB / GROUNDCOVER BEDS SHALL INCLUDE NETAFIM TECHLINE TLHCVXR SERIES DRIP TUBE WITH PRE-INSTALLED .53 GPH DRIP EMITTERS AT 12" INTERVALS (TLHCVXR5-12), INSTALLED IN CENTER-FED GRIDS WITH ROWS SPACED 18" APART. INDIVIDUAL DRIP TUBE RUNS SHALL NOT EXCEED 150 L.F. PVC LATERAL "TRUNK" LINES SHALL BE INSTALLED 10" DEEP. DRIP TUBE SHALL BE SET 2" BELOW FINISHED SOIL GRADE (NOT INCLUDING MULCH LAYER), SECURELY STAKED EVERY 18". NETAFIM #TL050MFV-1 FLUSH VALVES SHALL BE INSTALLED AT THE FARTHEST POINTS FROM THE ZONE VALVE. USE 17 MM BARBED FITTINGS FOR DRIP LINE CONNECTIONS, SET THE MAXIMUM OPERATING PRESSURE AT 50 PSI. TECHLINE CV SHALL BE INSTALLED PERPENDICULAR TO SLOPE FACE. INSTALL TLCV IN-LINE CHECK VALVES FOR EVERY 4.5 FEET OF DRIP LINE ELEVATION CHANGE WITHIN THE ZONE. USE NETAFIM STAPLES (#TLS6) TO SECURE TUBING EVERY 18" EACH DRIP ZONE SHALL INCLUDE ONE MAINTENANCE "FLAG" WHICH SHALL CONSIST OF A 12" POP-UP SPRAY HEAD AND COMPLETELY CLOSED SPRAY NOZZLE. THE POP-UP HEAD SHALL BE CONNECTED TO THE DRIP ZONE PIPE, SET FLUSH WITH GRADE, AND LOCATED AT THE FARTHEST DISTANCE FROM THE DRIP VALVE ASSEMBLY. INSTALL THE "FLAG" HEAD ADJACENT TO EDGING OR IN LOW PLANTINGS FOR EASE OF VIEWING. SPARSLEY SPACED, INDIVIDUAL SHRUB PLANTINGS MAY INCLUDE RAINBIRD #XBT-10 SINGLE-OUTLET EMITTERS OR RAINBIRD #XBT-10-6 MULTI-OUTLET EMITTERS INSTALLED AS DETAILED. PROVIDE MINIMUM TWO, 1 G.P.H. OUTLETS PER INDIVIDUAL SHRUB. SINGLE / MULTI-OUTLET EMITTERS MAY BE CONNECTED TO THE SAME DRIP ZONE VALVE WHICH SERVES ADJACENT DRIP TUBE GRIDS, UNLESS NOTED OTHERWISE.

811

THE LOCATION OF EXISTING UNDERGROUND UTILITIES ARE SHOWN IN AN APPROXIMATE WAY ONLY. THE CONTRACTOR SHALL DETERMINE THE EXACT LOCATION OF ALL EXISTING UTILITIES BEFORE COMMENCING WORK. HE AGREES TO BE FULLY RESPONSIBLE FOR ANY AND ALL DAMAGES WHICH MIGHT BE OCCASIONED BY HIS FAILURE TO EXACTLY LOCATE AND PRESERVE ANY AND ALL UNDERGROUND UTILITIES.

PLOT: 3/31/2023 7:03:02 PM FILE: C:\Users\jason\AppData\Local\Microsoft\Windows\INetCache\Content.Outlook\NWWF0J8S\W21057_IRRI.dwg

IRRIGATION IN TEXAS IS REGULATED BY THE TEXAS COMMISSION ON ENVIRONMENTAL QUALITY (TCEQ) (MC-178) P.O. BOX 13087 T.C.E.Q.'S WEB SITE IS: WWW.TCEQ.STATE.TX.US

STATE OF TEXAS ★ CHRISTOPHER DIGGS 10311 LICENSED IRRIGATOR
03 / 31 / 2023

James Pole
IRRIGATION CONSULTANTS
IRRIGATION DESIGN, CONSULTING, AND LANDSCAPE WATER MANAGEMENT
TEXAS L.I.C. #658
100 N. LOCUST ST., SUITE 3
DENTON, TEXAS 76201
OFFICE: 940.243.2364
FAX: 940.382.2475
james@jamespoleirrigation.com

oro
7708 Rialto Blvd, Suite 125
Austin, Texas 78735
812.552.9114 | 512.765.0314

REGISTERED LANDSCAPE ARCHITECT ALEXANDER J. HOWELL 3219 STATE OF TEXAS
03/31/2023

301 CONGRESS AVENUE STREETSCAPE LICENSE AGREEMENT

Austin, Texas

DRAWINGS ISSUED FOR:
LICENSE AGREEMENT

DATE ISSUED
MARCH 31, 2023

REVIEWED BY:
Courtney Tarver | Alex Howell

ORO PROJECT NUMBER:
21057

NUMBER | DRAWING REVISIONS | DATE

IRRIGATION DETAILS

L5