PERMITTING PACKAGE
PRIVATE RESIDENCE

JAMES
HYATT
STUDIO

600 12th Street, Suite 100
Golden, Colorado 80401
T/ 720.539.7907 · C/ 303.810.6113

CONSULTANTS

SIGNATURE & SEAL

KEYMAP

2900 TARRY TRAIL
AUSTIN TX 78703

SUBMITTALS

-	-

REVISIONS

NO.	COMMENTS	DATE
-	-	-

SHEET INFORMATION

DATE	MAY 15, 2023
JOB NUMBER	
DRAWN BY	JM
CHECKED BY	JH

COVER SHEET

L-000

Copyright 2022 JAMESHYATT STUDIO

INDEX OF SHEETS

L-000	COVER SHEET
L-001	SHEET INDEX & GENERAL NOTES
L-101	SITE DEMOLITION PLAN
L-201	LAYOUT & MATERIALS PLAN
L-301	GRADING PLAN
L-400	PLANT SCHEDULE & NOTES
L-401	PLANTING PLAN
L-410	PLANTING DETAILS
L-500	SITE DETAILS
L-501	SITE DETAILS
L-502	SITE DETAILS
L-503	SITE DETAILS
L-504	SITE DETAILS
L-505	SITE DETAILS
L-506	SITE DETAILS
L-507	SITE DETAILS
L-601	SITE LIGHTING
L-610	LIGHTING DETAILS

CONTRACTOR'S LANDSCAPE WORK RESPONSIBILITIES:

1. SCOPE OF WORK: THE CONTRACTOR SHALL PROVIDE ALL LABOR, MATERIALS, TRANSPORTATION AND SERVICES NECESSARY TO FURNISH AND INSTALL ALL PLANTING, HARDSCAPE, AND SITE FEATURES ELEMENTS AS SHOWN ON THE DRAWINGS AND SPECIFIED HEREIN.

2. CONFORMANCE: ALL PLANTING WORK SHALL CONFORM TO APPLICABLE LOCAL, COUNTY AND/OR STATE CODES, REGULATIONS AND RULES.

3. LICENSE: ALL WORK SHALL BE PERFORMED BY A TEXAS LICENSED CONTRACTOR.

4. PERMITS AND INSPECTIONS: THE CONTRACTOR SHALL OBTAIN, COORDINATE AND PAY FOR ANY AND ALL PERMITS AND AGENCY INSPECTIONS AS REQUIRED.

5. INSURANCE: THE CONTRACTOR SHALL CARRY ALL WORKERS' COMPENSATION, PUBLIC LIABILITY, PROPERTY DAMAGE INSURANCE AS REQUIRED BY ALL APPLICABLE CODES AND REGULATIONS AND BY THE OWNER'S REP.

6. SITE VERIFICATION: PRIOR TO COMMENCEMENT OF WORK, THE CONTRACTOR SHALL VERIFY, AT THE SITE, ALL CONDITIONS AND DIMENSIONS SHOWN ON THE PLANS AFFECTING THE INTENDED DESIGN OF THE LANDSCAPE WORK. ANY DISCREPANCIES SHALL BE REPORTED TO THE OWNER'S REP.

7. LIABLE FOR ENCROACHMENT: THE CONTRACTOR SHALL BE RESPONSIBLE FOR ANY ENCROACHMENT ONTO ADJACENT PROPERTY, RIGHT - OF - WAYS, EASEMENTS, SETBACKS OR ANY OTHER PROPERTY RESTRICTIONS EITHER MARKED OR UNMARKED.

8. COORDINATION OF ACTIVITIES: THE CONTRACTOR SHALL BE RESPONSIBLE FOR COORDINATION OF REQUIRED ACTIVITIES WITH ALL OTHER TRADES THROUGH THE OWNER'S REP.

9. FIELD STAKING: PRIOR TO INSTALLATION, THE CONTRACTOR SHALL LOCATE BY STAKES, OR OTHER MEANS, CONTAINER TREES, VINES AND SHRUB LOCATIONS AND HEADER BOARD/MOW CURB LAYOUT FOR INSPECTION BY OWNER'S REP. AND LANDSCAPE ARCHITECT. THE CONTRACTOR SHALL NOTIFY BOTH PARTIES 24 HOURS PRIOR TO INSPECTION.

10. NOTIFICATION OF DISCREPANCIES: ANY DISCREPANCIES BETWEEN THE FIELD CONDITIONS AND THE CONTRACT DOCUMENTS AND/OR THE DESIGN INTENT AFFECTING THE SUCCESSFUL COMPLETION AND COST OF THE PROJECT SHALL BE REPORTED TO THE OWNER'S REP. AND LANDSCAPE ARCHITECT IMMEDIATELY. ALL WORK RELATED TO THE PROBLEM AREA SHALL CEASE UNTIL THE DISCREPANCIES HAVE BEEN RESOLVED BY THE OWNER'S REP. AND LANDSCAPE ARCHITECT IN WRITING. ANY CONTINUATION OF THIS WORK IS AT THE CONTRACTOR'S RISK AND EXPENSE.

11. LIABLE FOR DAMAGE: THE CONTRACTOR SHALL BE LIABLE FOR DAMAGE TO ALL UTILITIES, CONSTRUCTION, IRRIGATION AND PLANTING ELEMENTS, EXISTING OR NEW, MARKED OR UNMARKED AND SHALL REPAIR OR REPLACE ANY DAMAGED IMPROVEMENTS IN A MANNER ACCEPTABLE TO THE OWNER'S REP. OR ASSOCIATED PARTY.

12. LIABLE FOR LOSS: THE CONTRACTOR SHALL BE RESPONSIBLE FOR ANY LOSS TO EQUIPMENT, PARTS AND MATERIALS ON THIS PROJECT UNTIL COMPLETION AND ACCEPTANCE IN WRITING FROM THE OWNER'S REP.

13. WRITTEN GUARANTEE: ALL WORK SHALL BE GUARANTEED BY THE CONTRACTOR AS TO MATERIAL AND WORKMANSHIP FOR A PERIOD OF ONE YEAR FOLLOWING THE DATE OF FINAL ACCEPTANCE OF THE PROJECT. THE CONTRACTOR SHALL PROVIDE A WRITTEN GUARANTEE ON HIS LETTERHEAD AT THE TIME OF FINAL INSPECTION.

14. WRITTEN CERTIFICATION: THE CONTRACTOR SHALL PROVIDE A WRITTEN CERTIFICATION THAT THE PLANTING WORK IS INSTALLED IN FULL COMPLIANCE OF THE CONTRACT DOCUMENTS. ANY APPROVED SUBSTITUTIONS OR DEVIATIONS FROM THE PLANS OR SPECIFICATIONS SHALL BE NOTED. THIS CERTIFICATION SHALL BE ON THE CONTRACTORS LETTERHEAD WITH HIS SIGNATURE AND COLORADO CONTRACTOR'S LICENSE.

15. PLANT MATERIALS APPROVALS: THE CONTRACTOR SHALL, WITHIN FORTY FIVE (45) WORKING DAYS FOLLOWING AWARD OF THE CONTRACT, SUBMIT TO THE OWNER'S REP. AND LANDSCAPE ARCHITECT A COMPLETE LIST OF REQUIRED CONTAINERS AND FLATTED GROUNDCOVER MATERIAL. THE LIST SHALL INCLUDE EACH TREE, SHRUB, AND GROUNDCOVER, THEIR BOTANICAL AND COMMON NAME, THEIR SPECIFICATIONS AS TO HEIGHT, SPREAD AND TRUNK CALIPER AT A ONE (1) FOOT ABOVE GRADE (FOR TREES). IN THE EVENT THE CONTRACTOR RECOMMENDS SUBSTITUTIONS, THE CONTRACTOR SHOULD SUBMIT TO THE OWNER'S REP. AND LANDSCAPE ARCHITECT A COMPLETE LIST OF SUBSTITUTIONS FOR EACH TREE, SHRUB, AND GROUNDCOVER, THEIR BOTANICAL AND COMMON NAME, THEIR SPECIFICATIONS AS TO HEIGHT, SPREAD AND TRUNK CALIPER AT A ONE (1) FOOT ABOVE GRADE (FOR TREES).

OWNER'S CONSTRUCTION WORK RESPONSIBILITIES:

1. CONSTRUCTION RESPONSIBILITIES: THE CONTRACTOR WILL BE DIRECTLY RESPONSIBLE FOR ALL ASPECTS OF CONSTRUCTION, INCLUDING ALL LANDSCAPE INSPECTIONS. ALL FIELD MEETINGS SHALL BE COORDINATED THROUGH THE OWNER'S REP. TO THE LANDSCAPE ARCHITECT. THE LANDSCAPE ARCHITECT SHALL BE IN A SUPPORT OBSERVATION ROLE TO THE OWNER PROVIDING INTERPRETIVE ADVICE ONLY IN ACCORDANCE WITH THE OBSERVATION SCHEDULE AS NOTED.

2. DETERMINING LEGAL AND PHYSICAL ELEMENTS: THE CONTRACTOR SHALL BE RESPONSIBLE FOR DETERMINING PROPERTY LINES, RIGHT-OF-WAYS, TRACT BOUNDARIES, GRADES, EASEMENTS, UTILITY LOCATIONS (ABOVE AND BELOW GRADE), AND ANY OTHER LEGAL OR PHYSICAL ELEMENTS AS REQUIRED FOR THE SUCCESSFUL COMPLETION OF THE WORK. CONTRACTOR SHALL NOT PROCEED WITH ANY OTHER WORK WITHOUT DETERMINATION OF THE WORK ABOVE.

3. ROUGH GRADE: CONTRACTOR SHALL PROVIDE ROUGH GRADE TO WITHIN 1/10 OF ONE FOOT (1) FROM FINISH GRADE. THE CONTRACTOR SHALL BE RESPONSIBLE FOR FINISH GRADE AND DRAINAGE OF ALL PLANTING AREAS AT 2% MINIMUM GRADIENT. IN ALL CASES, POSITIVE DRAINAGE AWAY FROM STRUCTURES SHALL BE ACHIEVED.

4. SITE DISCREPANCIES: ALL DISCREPANCIES IN SITE CONDITIONS, DRAWINGS OR SPECIFICATIONS SHALL BE BROUGHT TO THE ATTENTION OF THE OWNER'S REP. AND LANDSCAPE ARCHITECT IMMEDIATELY. IT IS THE OWNER'S REP'S RESPONSIBILITY TO CONTACT THE LANDSCAPE ARCHITECT PRIOR TO ANY FURTHER WORK IN THE DISCREPANCY AREA. ANY UNREPORTED DISCREPANCY AND CONTINUED WORK WITHOUT WRITTEN AUTHORIZATION FROM THE OWNER AND LANDSCAPE ARCHITECT SHALL BE AT THE CONTRACTORS RISK AND EXPENSE.

5. CONTRACTOR FULFILLMENT: ALL QUESTIONS RELATING TO INTERPRETATION OF THE DRAWINGS AND SPECIFICATIONS, QUALITY OF WORK AND ACCEPTABLE FULFILLMENT OF INTENT OF THE CONTRACT DOCUMENTS SHALL BE DECIDED BY THE OWNER'S REP. AND LANDSCAPE ARCHITECT CONCURRENTLY.

REQUIRED FIELD OBSERVATION WORK:

1. REQUIRED FIELD OBSERVATION WORK: THESE PLANS WERE PREPARED WITH THE UNDERSTANDING THAT THE OWNER OF SAID PLANS WILL USE JAMES HYATT STUDIO TO PROVIDE "FULL" CONTRACT SERVICES INCLUDING FIELD OBSERVATION SERVICES DURING CONSTRUCTION. FAILURE TO USE JAMES HYATT STUDIO TO PROVIDE AND COMPLETE THE FIELD OBSERVATION SERVICES SET FORTH HEREIN WILL SIGNIFICANTLY INCREASE THE RISK OF LOSS RESULTING, AMONG OTHER CAUSES, FROM MISINTERPRETATION OF THE INTENT OF THE DESIGN, UNAUTHORIZED MODIFICATIONS THERETO AND FAILURE TO DETECT ERRORS AND OMISSIONS IN THE PLANS AND SPECIFICATIONS BEFORE THEY BECOME COSTLY MISTAKES BUILT INTO THE PROJECT. THEREFORE, IN THE EVENT THAT JAMES HYATT STUDIO IS OTHERWISE PRECLUDED FROM COMPLETING THE FIELD OBSERVATIONS SET FORTH HEREIN. THE OWNER OR SUBSEQUENT OWNER (INDIVIDUALS OR CORPORATIONS WHO HAVE PURCHASED THESE PLANS WITH THE PROJECT) AGREES TO HOLD HARMLESS, INDEMNIFY, AND DEFEND JAMES HYATT STUDIO FROM AND AGAINST ANY AND ALL CLAIMS.

LANDSCAPE ARCHITECT'S LANDSCAPE FIELD OBSERVATION SCHEDULE:

1. FIELD OBSERVATION COORDINATION: THE CONTRACTOR SHALL NOTIFY THE OWNER'S REP. AND LANDSCAPE ARCHITECT NOT LESS THAN TWENTY FOUR (24) HOURS IN ADVANCE OF ANY NECESSARY OBSERVATION. CONTINUED WORK WITHOUT OBSERVATION OF THESE PHASES OF WORK IS AT THE CONTRACTORS RISK WITH ANY REQUIRED CHANGE OR MODIFICATIONS AT THE CONTRACTOR'S EXPENSE.

2. CONTRACTOR ORIENTATION/PRE-CONSTRUCTION MEETING: THIS MEETING SHALL BE CONDUCTED TO DISCUSS THE SPECIFICATIONS, POSSIBLE DISCREPANCIES, SITE CONDITIONS AND OTHER ASPECTS SUCH AS PERSONNEL SCHEDULE AND REQUIREMENTS FOR STARTING WORK. PRIOR TO THE MEETING CONTRACTOR SHALL THOROUGHLY ACQUAINT HIMSELF WITH THE SITE CONDITIONS, AND THE PLANS, DETAILS AND SPECIFICATIONS.

LANDSCAPE ARCHITECTS LANDSCAPE FIELD OBSERVATION SCHEDULE CONTINUED:

1. PLANT MATERIAL APPROVAL, LAYOUT AND FINE GRADE OBSERVATION: THIS OBSERVATION VISIT SHALL BE PERFORMED AFTER PLACEMENT OR STAKING IN THE FIELD OF ALL PLANT MATERIALS PER THE PLANS. CONTAINER PLANTS SHALL BE PLACED ON SITE. BOXED SPECIMENS SHALL BE STAKED AS TO LOCATION. THE OWNER'S REP. AND LANDSCAPE ARCHITECT SHALL APPROVE PLANT MATERIAL TYPE AND QUALITY, LOCATIONS OF ALL PLANT MATERIAL, BACKFILL MIX, AND FINE GRADE PRIOR TO ANY PLANTING WORK. LANDSCAPE ARCHITECT MUST APPROVE LAYOUT OF CONTAINERIZED PLANTS, ON SITE, PRIOR TO INSTALLATION.

2. PROGRESS/INSTALLATION INSPECTIONS: PERIODIC INSPECTIONS SHALL BE PERFORMED BY THE OWNER'S REP. DURING CONSTRUCTION OPERATIONS TO INSURE CONFORMANCE TO PLANS AND JOB SPECIFICATIONS.

3. PLANT MATERIAL/HYDROSEED/PRE-MAINTENANCE OBSERVATION: THIS OBSERVATION WILL BE PERFORMED TO REVIEW ALL WORK UNDER CONTRACT FOR COMPETENCY. SCHEDULING SHALL COINCIDE WITH ANY HYDRO-SEEDING WORK TO BE PERFORMED UNDER THIS CONTRACT. THE OWNER'S REP. AND LANDSCAPE ARCHITECT SHALL VERIFY CONFORMANCE OF HYDRO-SEED MATERIALS AND SEED PRIOR TO APPLICATION AND PRIOR TO STARTING THE MAINTENANCE PERIOD.

4. FINAL OBSERVATION/PROJECT SUBSTANTIAL CONFORMANCE: THIS OBSERVATION VISIT WILL BE PERFORMED TO PREVIEW ALL ASPECTS OF THE CONTRACTED WORK PRIOR TO RELEASING THE PROJECT TO THE OWNER.

V. SCOPE OF LANDSCAPE WORK:

1. SITE PREPARATION: PRIOR TO PROCEEDING WITH ANY WORK UNDER THE CONTRACT. THE CONTRACTOR SHALL REMOVE ALL ROCKS, WEED, DEBRIS AND OTHER EXTRANEOUS MATERIAL FROM THE JOBSITE AND DISPOSE OF IT OFF SITE IN A SUITABLE AND LAWFUL MANNER.

2. PLANTING AREAS: UPON COMPLETION OF ALL IRRIGATION WORK ALL PLANTING AREAS SHALL BE SPREAD WITH SYSTEMIC HERBICIDE, CLEARED AND GRUBBED OF SURFACE WEED GROWTH AND SHALL BE WEED FREE PRIOR TO PROCEEDING WITH ANY PLANTING WORK.

3. FINISH GRADE: THE CONTRACTOR SHALL ESTABLISH FINISH GRADE A MINIMUM OF SIX INCHES (6") BELOW THE FINISH FLOOR OF BUILDINGS. THE CONTRACTOR SHALL BE RESPONSIBLE FOR SMOOTH EVEN FINISH GRADES AR BUILDING WALKS, OTHER PERMANENT OBJECTS AND LIMITS OF WORK. ALL CHANGES IN GRADE SHALL BE BLENDED UNIFORM VERTICAL CURVES. ALL AREAS TO BE PLANTED IN TURF SHALL BE SMOOTHED WITH RAKES AND FLOATS TO THE OWNER'S REP.S' SATISFACTION. OBJECTS SUCH AS ROCKS, DEBRIS, CLODS OR OTHER EXTRANEOUS MATERIAL SHALL BE STOCK-PILED AND REMOVED.

4. DRAINAGE: THE CONTRACTOR SHALL BE RESPONSIBLE FOR THE DRAINAGE IN ALL PLANTING AREAS IN ACCORDANCE WITH THE PLANS, DETAILS AND SPECIFICATIONS AT A MINIMUM 2% GRADIENT.

5. IMPORTED SOIL: ON-SITE SOIL SHALL BE USED FOR ALL LANDSCAPE BERMS AND MOUNDING. WHEN ON-SITE SOIL IS NOT AVAILABLE, IMPORT SOIL SHALL MEET THE FOLLOWING SPECIFICATIONS.

   III. SILT PLUS CLAY CONTENT OF THE IMPORT SOIL SHALL NOT EXCEED 20% BY WEIGHT WITH A MINIMUM 95% PASSING THE 2.0 MM SIEVE. THE SODIUM ABSORPTION RATIO (SAR) SHALL NOT EXCEED 6.0 MM AND THE ELECTRICAL CONDUCTIVITY (EGE) OF THE SATURATION EXTRACT OF THE SOIL SHALL NOT EXCEED 6.0 MM AND THE ELECTRICAL CONDUCTIVITY (EGE) OF THE SATURATION EXTRACT OF THE SOIL SHALL NOT EXCEED 3.0 MM

   IIJ. THE BORON CONTENT OF THIS SOIL SHALL NOT BE GREATER THAN 1 PPM AS MEASURED ON THE SATURATION EXTRACT IN ORDER TO INSURE CONFORMANCE. SAMPLES OF THE IMPORT SOIL SHALL BE SUBMITTED TO THE SOIL LABORATORY FOR ANALYSIS PRIOR TO IMPORT TO THE SITE.

6. PLANT MATERIAL: ALL PLANT MATERIAL SHALL BE OF A SIZE CHARACTER AND QUALITY WHICH MEETS THE ACCEPTED INDUSTRY STANDARDS FOR THAT PLANT AND BE FREE FROM INSECTS, THEIR EGGS, DISEASE, WEEDS OR OTHER DETRIMENTAL CHARACTERISTICS.

7. HANDLING/STORAGE: ALL PLANTS SHALL BE HANDLED AND STORED SO THEY ARE ADEQUATELY PROTECTED FROM DRYING OUT, SUN, WIND BURN, VANDALISM OR OTHER INJURY.

8. REJECTION OF PLANT MATERIAL: THE OWNER'S REP. AND LANDSCAPE ARCHITECT MAY REJECT ANY PLANT MATERIAL REGARDED AS UNSUITABLE AT ANY TIME. SUCH PLANTS SHALL BE REMOVED FROM JOB SITE IMMEDIATELY AND BE REPLACED AT NO ADDITIONAL COST.

9. PLANTING: ALL PLANT MATERIAL SHALL BE AS SPECIFIED AND PLANTED AS DETAILED AND NOTED HEREIN.

10. GROUNDCOVER PLANTING: ALL GROUNDCOVER AREAS ON THE PLANS SHALL BE PLANTED WITH ROOTED CUTTINGS FROM FLATS IN STAGGERED ROWS CONTINUOUSLY UNDER TREES AND SHRUBS AT THE SPACING INDICATED IN THE PLANS.

11. SOIL PREPARATION: ALL PLANTING AREAS TO RECEIVE GROUNDCOVER FROM FLATS AND/OR TURF (EXCEPT GROUNDCOVER AREAS ON SLOPES OF 3:1 OR GREATER) SHALL RECEIVE THE FOLLOWING AMENDMENTS PER 1,000 SQ.FT. AND SHALL BE UNIFORMLY BLENDED INTO THE UPPER SURFACE SOIL TO A DEPTH AS REQUIRED IN THE HORTICULTURE SOILS REPORT.

    MATERIAL
    NITROGEN FORTIFIED ORGANIC AMENDMENT (COMPOST OR REDWOOD OR FIR SAWDUST)
    FERTILIZER GYPSUM. *RATES AND FERTILIZERS MAY HAVE TO BE ADJUSTED DEPENDING ON ANALYSIS OF SELECTED COMPOST.

12. BACKFILL MIX: BACKFILL MIX AROUND ALL CONTAINER PLANT MATERIALS SHALL CONSIST OF THE FOLLOWING UNIFORMLY BLENDED MATERIALS PER CUBIC YARD:
    2 LBS IRON SULFATE
    4 LBS GYPSUM

13. PLANTING TABLETS: PLANT TABLETS SHALL BE 'GRO-POWER' PLANTING TABLETS 12-8-8 (7 GRAMS OR EQUAL) AND SHALL BR FURNISHED IN THE FOLLOWING PLANT TABLETS SHALL BE PLACED AT THE TOP OF THE ROOTBALL. APPROXIMATELY 2 INCHES (2") FROM ROOT TIP AT EVEN SPACING AROUND THE PLANT.

    A. THREE TABLETS PER ONE GALLON CONTAINER
    B. NINE TABLETS PER FIVE GALLON CONTAINER
    C. FIFTEEN TABLETS PER FIFTEEN GALLON CONTAINER
    D. SIXTEEN TABLETS PER TWENTY INCH BOX AN TWENTY-FOUR INCH BOX
    E. TWENTY TABLETS PER THIRTY INCH BOX AND THIRTY-SIX INCH BOX
    F. TWENTY-TWO TABLETS PER FORTY-TWO INCH BOX AND FORTY-EIGHT INCH BOX
    G. THIRTY-SIX INCH TABLETS PER SIXTY INCH BOX
    H. FORTY-FIVE TABLETS PER EIGHT-FOUR INCH BOX OR LARGER

SCOPE OF LANDSCAPE WORK CONTINUED:

13. VINES: ALL VINES SHALL BE PLANTED AS PER THE SHRUB/VINE PLANTING DETAIL AND SHALL HAVE THE WOOD SUPPORT STAKE CAREFULLY REMOVED WITHOUT DAMAGE TO THE PLANT OR ROOT.

    A. WOOD FENCES: ALL VINES SHALL BE ATTACHED TO WOOD FENCES WITH GALVANIZED NAILS OR GALVANIZED EYE-SCREWS AND HEAVY DUTY VINE TIES WITH A MINIMUM OF FIVE LOCATIONS PER EACH FIVE GALLON VINE AND TEN LOCATIONS PER EVERY FIFTEEN GALLON VINE.

    B. MASONRY WALLS: ON MASONRY WALLS, USE ADHESIVE TYPE VINE SUPPORT WITH SILICON ADHESIVE AND HEAVY DUTY VINE TIES ON MASONRY WALLS. INSTALL MINIMUM FIVE LOCATIONS PER EACH FIVE GALLON VINE AND TEN LOCATIONS FOR EACH FIFTEEN GALLON VINE.

C ESTABLISHMENT MAINTENANCE NOTES:

1. ESTABLISHMENT MAINTENANCE PERIOD: THE MAINTENANCE PERIOD SHALL COMMENCE UPON THE OWNER'S REP.S' WRITTEN APPROVAL OF ALL PHASES OF PLANTING INSTALLATION AND SHALL BE FOR THE PERIOD OF TIME AS FOLLOWS: 90 CALENDAR DAYS

2. MAINTENANCE PROCEDURES:

    A. GENERAL: THE GENERAL CARE AND MAINTENANCE OF ALL AREAS SHALL CONSIST OF PROPER WATERING FERTILIZATION WEEDING, RODENT CONTROL, CLEAN-UP AND AS NOTED BELOW.

    B. GROUNDCOVER FROM FLATS WITHOUT OVERSEED: APPLY PRE-EMERGENT HERBICIDE AT THE START OF MAINTENANCE IN ACCORDANCE WITH THE MANUFACTURER'S PRINTED INSTRUCTIONS.

    C. FERTILIZATION: MAINTENANCE WORK SHALL INCLUDE BEGINNING FERTILIZATION WITH THE FOLLOWING FERTILIZERS AT THIRTY DAY INTERVALS 30 DAYS AFTER PLANTING. 16-6-8 6LBS/1,000 SQ.FT.

    D. WEEDING: ANY CONCENTRATED DEVELOPMENT OF WEED GROWTH THAT MAY APPEAR IN PLANTING AREAS DURING THE MAINTENANCE PERIOD SHALL BE REMOVED AT TEN SAY INTERVALS. THE CONTRACTOR SHALL REMOVE SUCH CONCENTRATIONS OF WEEDS INCLUDING THEIR ROOTS BY HAND OR IN A MANNER ACCEPTABLE TO THE OWNER'S REP. AND LANDSCAPE ARCHITECT. NOTE: CULTIVATION OF GROUNDCOVER IS NOT ACCEPTABLE.

    E. RODENT CONTROL: THE CONTRACTOR SHALL TAKE THE NECESSARY STEPS TO ELIMINATE ANY RODENTS ENCOUNTERED ON SITE.

    F. CLEAN-UP DURING THE COURSE OF THE MAINTENANCE PERIOD, THE CONTRACTOR SHALL REMOVE SURPLUS MATERIALS AND DEBRIS FROM THE SITE AND SHALL KEEP THE PREMISES IN A NEAT AND CLEAN CONDITION AT ALL TIMES.

    G. PROTECTION OF LANDSCAPE DURING MAINTENANCE PERIOD: THE CONTRACTOR SHALL BE RESPONSIBLE FOR MAINTAINING ADEQUATE PROTECTION OF ALL PLANTING AREAS. ANY DAMAGED AREAS SHALL BE REPAIRED AT THE CONTRACTOR'S EXPENSE.

    H. TURF AREA: EDGE AND MOW TO A HEIGHT OF 2 INCHES WHENEVER THE TURF REACHES A HEIGHT OF 3 INCHES (WHERE TURF OCCURS ON THE PLANS).

JAMES HYATT STUDIO

600 12th Street, Suite 100
Golden, Colorado 80401
T/ 720.339.7907 C/ 303.810.6113

CONSULTANTS

SIGNATURE & SEAL

KEYMAP

2900 TARRY TRAIL
AUSTIN TX 78703

SUBMITTALS

-	-

REVISIONS

NO.	COMMENTS	DATE
-	-	-

SHEET INFORMATION

DATE	MAY 15, 2023
JOB NUMBER	
DRAWN BY	JM
CHECKED BY	JH

GENERAL NOTES

L-100

Copyright 2022 JAMESHYATT STUDIO

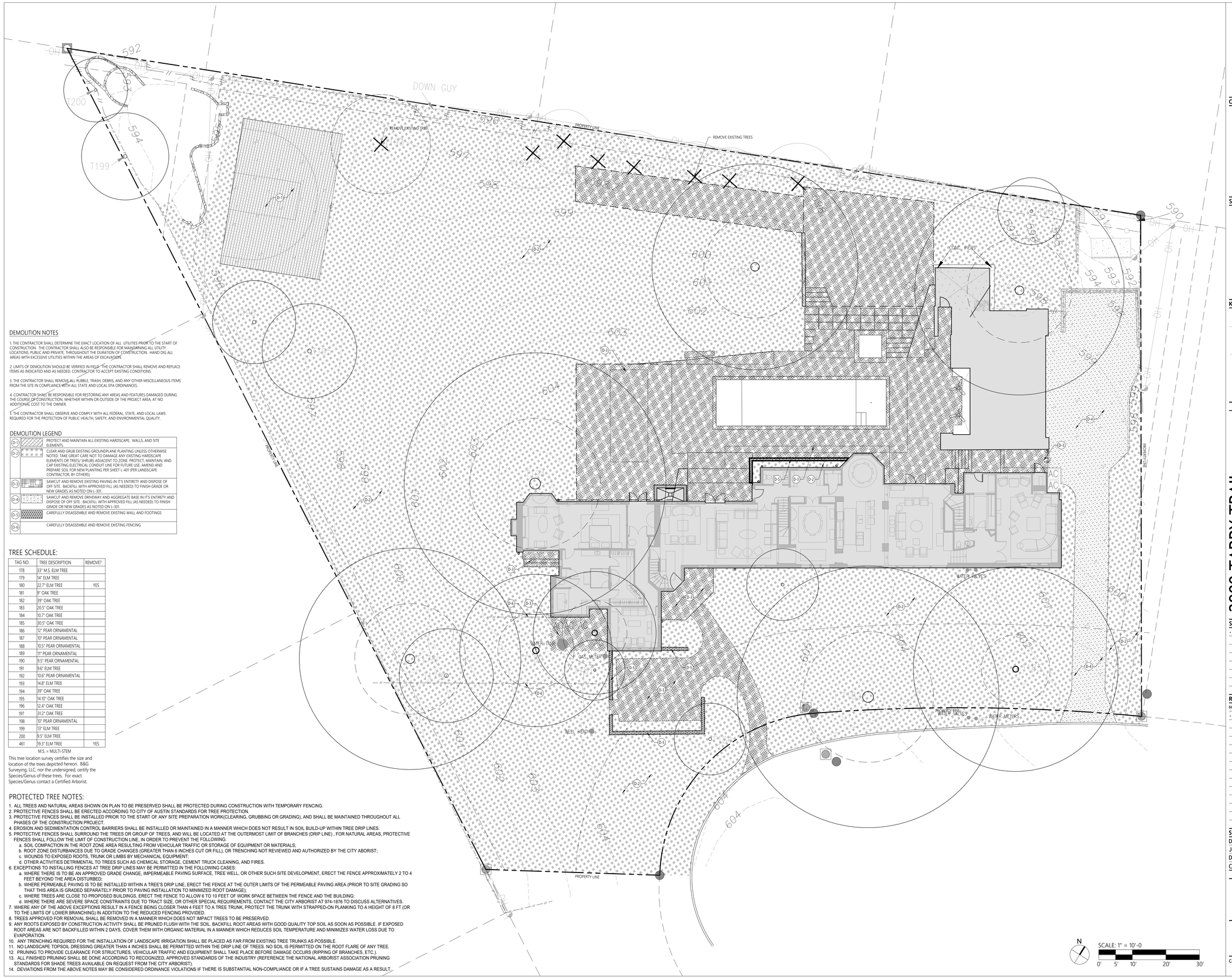

DEMOLITION NOTES

1. THE CONTRACTOR SHALL DETERMINE THE EXACT LOCATION OF ALL UTILITIES PRIOR TO THE START OF CONSTRUCTION. THE CONTRACTOR SHALL ALSO BE RESPONSIBLE FOR MAINTAINING ALL UTILITY LOCATIONS, PUBLIC AND PRIVATE, THROUGHOUT THE DURATION OF CONSTRUCTION. HAND DIG ALL AREAS WITH EXCESSIVE UTILITIES WITHIN THE AREAS OF EXCAVATION.

2. LIMITS OF DEMOLITION SHOULD BE VERIFIED IN FIELD. THE CONTRACTOR SHALL REMOVE AND REPLACE ITEMS AS INDICATED AND AS NEEDED. CONTRACTOR TO ACCEPT EXISTING CONDITIONS.

3. THE CONTRACTOR SHALL REMOVE ALL RUBBLE, TRASH, DEBRIS, AND ANY OTHER MISCELLANEOUS ITEMS FROM THE SITE IN COMPLIANCE WITH ALL STATE AND LOCAL EPA ORDINANCES.

4. CONTRACTOR SHALL BE RESPONSIBLE FOR RESTORING ANY AREAS AND FEATURES DAMAGED DURING THE COURSE OF CONSTRUCTION, WHETHER WITHIN OR OUTSIDE OF THE PROJECT AREA, AT NO ADDITIONAL COST TO THE OWNER.

5. THE CONTRACTOR SHALL OBSERVE AND COMPLY WITH ALL FEDERAL, STATE, AND LOCAL LAWS REQUIRED FOR THE PROTECTION OF PUBLIC HEALTH, SAFETY, AND ENVIRONMENTAL QUALITY.

DEMOLITION LEGEND

D-1	PROTECT AND MAINTAIN ALL EXISTING HARDSCAPE, WALLS, AND SITE ELEMENTS.
D-2	CLEAR AND GRUB EXISTING GROUNDPLANE PLANTING UNLESS OTHERWISE NOTED. TAKE GREAT CARE NOT TO DAMAGE ANY EXISTING HARDSCAPE ELEMENTS OR TREES/ SHRUBS ADJACENT TO ZONE. PROTECT, MAINTAIN, AND CAP EXISTING ELECTRICAL CONDUIT LINE FOR FUTURE USE. AMEND AND PREPARE SOIL FOR NEW PLANTING PER SHEET L-401 (PER LANDSCAPE CONTRACTOR, BY OTHERS)
D-3	SAWCUT AND REMOVE EXISTING PAVING IN IT'S ENTIRETY AND DISPOSE OF OFF SITE. BACKFILL WITH APPROVED FILL (AS NEEDED) TO FINISH GRADE OR NEW GRADES AS NOTED ON L-301.
D-4	SAWCUT AND REMOVE DRIVEWAY AND AGGREGATE BASE IN IT'S ENTIRETY AND DISPOSE OF OFF SITE. BACKFILL WITH APPROVED FILL (AS NEEDED) TO FINISH GRADE OR NEW GRADES AS NOTED ON L-301.
D-5	CAREFULLY DISASSEMBLE AND REMOVE EXISTING WALL AND FOOTINGS
D-6	CAREFULLY DISASSEMBLE AND REMOVE EXISTING FENCING

TREE SCHEDULE:

TAG NO.	TREE DESCRIPTION	REMOVE?
178	33" M.S. ELM TREE	
179	14" ELM TREE	
180	22.7" ELM TREE	YES
181	9" OAK TREE	
182	39" OAK TREE	
183	20.5" OAK TREE	
184	10.7" OAK TREE	
185	30.5" OAK TREE	
186	12" PEAR ORNAMENTAL	
187	10" PEAR ORNAMENTAL	
188	10.5" PEAR ORNAMENTAL	
189	11" PEAR ORNAMENTAL	
190	9.5" PEAR ORNAMENTAL	
191	9.6" ELM TREE	
192	10.6" PEAR ORNAMENTAL	
193	14.8" ELM TREE	
194	39" OAK TREE	
195	14.10" OAK TREE	
196	12.4" OAK TREE	
197	31.2" OAK TREE	
198	10" PEAR ORNAMENTAL	
199	13" ELM TREE	
200	9.5" ELM TREE	
461	19.3" ELM TREE	YES

M.S. = MULTI-STEM

This tree location survey certifies the size and location of the trees depicted hereon. B&G Surveying, LLC, nor the undersigned, certify the Species/Genus of these trees. For exact Species/Genus contact a Certified Arborist.

PROTECTED TREE NOTES:

1. ALL TREES AND NATURAL AREAS SHOWN ON PLAN TO BE PRESERVED SHALL BE PROTECTED DURING CONSTRUCTION WITH TEMPORARY FENCING.
2. PROTECTIVE FENCES SHALL BE ERECTED ACCORDING TO CITY OF AUSTIN STANDARDS FOR TREE PROTECTION.
3. PROTECTIVE FENCES SHALL BE INSTALLED PRIOR TO THE START OF ANY SITE PREPARATION WORK(CLEARING, GRUBBING OR GRADING), AND SHALL BE MAINTAINED THROUGHOUT ALL PHASES OF THE CONSTRUCTION PROJECT.
4. EROSION AND SEDIMENTATION CONTROL BARRIERS SHALL BE INSTALLED OR MAINTAINED IN A MANNER WHICH DOES NOT RESULT IN SOIL BUILD-UP WITHIN TREE DRIP LINES.
5. PROTECTIVE FENCES SHALL SURROUND THE TREES OR GROUP OF TREES, AND WILL BE LOCATED AT THE OUTERMOST LIMIT OF BRANCHES (DRIP LINE) , FOR NATURAL AREAS, PROTECTIVE FENCES SHALL FOLLOW THE LIMIT OF CONSTRUCTION LINE, IN ORDER TO PREVENT THE FOLLOWING:
   a. SOIL COMPACTION IN THE ROOT ZONE AREA RESULTING FROM VEHICULAR TRAFFIC OR STORAGE OF EQUIPMENT OR MATERIALS;
   b. ROOT ZONE DISTURBANCES DUE TO GRADE CHANGES (GREATER THAN 6 INCHES CUT OR FILL), OR TRENCHING NOT REVIEWED AND AUTHORIZED BY THE CITY ABORIST;
   c. WOUNDS TO EXPOSED ROOTS, TRUNK OR LIMBS BY MECHANICAL EQUIPMENT;
   d. OTHER ACTIVITIES DETRIMENTAL TO TREES SUCH AS CHEMICAL STORAGE, CEMENT TRUCK CLEANING, AND FIRES.
6. EXCEPTIONS TO INSTALLING FENCES AT TREE DRIP LINES MAY BE PERMITTED IN THE FOLLOWING CASES:
   a. WHERE THERE IS TO BE AN APPROVED GRADE CHANGE, IMPERMEABLE PAVING SURFACE, TREE WELL, OR OTHER SUCH SITE DEVELOPMENT, ERECT THE FENCE APPROXIMATELY 2 TO 4 FEET BEYOND THE AREA DISTURBED.
   b. WHERE PERMEABLE PAVING IS TO BE INSTALLED WITHIN A TREE'S DRIP LINE, ERECT THE FENCE AT THE OUTER LIMITS OF THE PERMEABLE PAVING AREA (PRIOR TO SITE GRADING SO THAT THIS AREA IS GRADED SEPARATELY PRIOR TO PAVING INSTALLATION TO MINIMIZED ROOT DAMAGE);
   c. WHERE TREES ARE CLOSE TO PROPOSED BUILDINGS, ERECT THE FENCE TO ALLOW 6 TO 10 FEET OF WORK SPACE BETWEEN THE FENCE AND THE BUILDING;
   d. WHERE THERE ARE SEVERE SPACE CONSTRAINTS DUE TO TRACT SIZE, OR OTHER SPECIAL REQUIREMENTS, CONTACT THE CITY ARBORIST AT 974-1876 TO DISCUSS ALTERNATIVES.
7. WHERE ANY OF THE ABOVE EXCEPTIONS RESULT IN A FENCE BEING CLOSER THAN 4 FEET TO A TREE TRUNK, PROTECT THE TRUNK WITH STRAPPED-ON PLANKING TO A HEIGHT OF 8 FT (OR TO THE LIMITS OF LOWER BRANCHING) IN ADDITION TO THE REDUCED FENCING PROVIDED.
8. TREES APPROVED FOR REMOVAL SHALL BE REMOVED IN A MANNER WHICH DOES NOT IMPACT TREES TO BE PRESERVED.
9. ANY ROOTS EXPOSED BY CONSTRUCTION ACTIVITY SHALL BE PRUNED FLUSH WITH THE SOIL. BACKFILL ROOT AREAS WITH GOOD QUALITY TOP SOIL AS SOON AS POSSIBLE. IF EXPOSED ROOT AREAS ARE NOT BACKFILLED WITHIN 2 DAYS, COVER THEM WITH ORGANIC MATERIAL IN A MANNER WHICH REDUCES SOIL TEMPERATURE AND MINIMIZES WATER LOSS DUE TO EVAPORATION.
10. ANY TRENCHING REQUIRED FOR THE INSTALLATION OF LANDSCAPE IRRIGATION SHALL BE PLACED AS FAR FROM EXISTING TREE TRUNKS AS POSSIBLE.
11. NO LANDSCAPE TOPSOIL DRESSING GREATER THAN 4 INCHES SHALL BE PERMITTED WITHIN THE DRIP LINE OF TREES. NO SOIL IS PERMITTED ON THE ROOT FLARE OF ANY TREE.
12. PRUNING TO PROVIDE CLEARANCE FOR STRUCTURES, VEHICULAR TRAFFIC AND EQUIPMENT SHALL TAKE PLACE BEFORE DAMAGE OCCURS (RIPPING OF BRANCHES, ETC.).
13. ALL FINISHED PRUNING SHALL BE DONE ACCORDING TO RECOGNIZED, APPROVED STANDARDS OF THE INDUSTRY (REFERENCE THE NATIONAL ARBORIST ASSOCIATION PRUNING STANDARDS FOR SHADE TREES AVAILABLE ON REQUEST FROM THE CITY ARBORIST).
14. DEVIATIONS FROM THE ABOVE NOTES MAY BE CONSIDERED ORDINANCE VIOLATIONS IF THERE IS SUBSTANTIAL NON-COMPLIANCE OR IF A TREE SUSTAINS DAMAGE AS A RESULT.

N

SCALE: 1" = 10'-0

0' 5' 10' 20' 30'

JAMES HYATT STUDIO
600 12th Street, Suite 100
Golden, Colorado 80401
T/ 720.339.7907 C/ 303.810.6113

CONSULTANTS

SIGNATURE & SEAL

KEYMAP

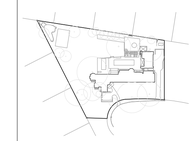

2900 TARRY TRAIL
AUSTIN TX 78703

SUBMITTALS

-	-

REVISIONS

NO.	COMMENTS	DATE
-	-	-

SHEET INFORMATION

DATE	MAY 15, 2023
JOB NUMBER	
DRAWN BY	JM
CHECKED BY	JH

SITE DEMOLITION PLAN

L-101

Copyright 2022 JAMESHYATT STUDIO

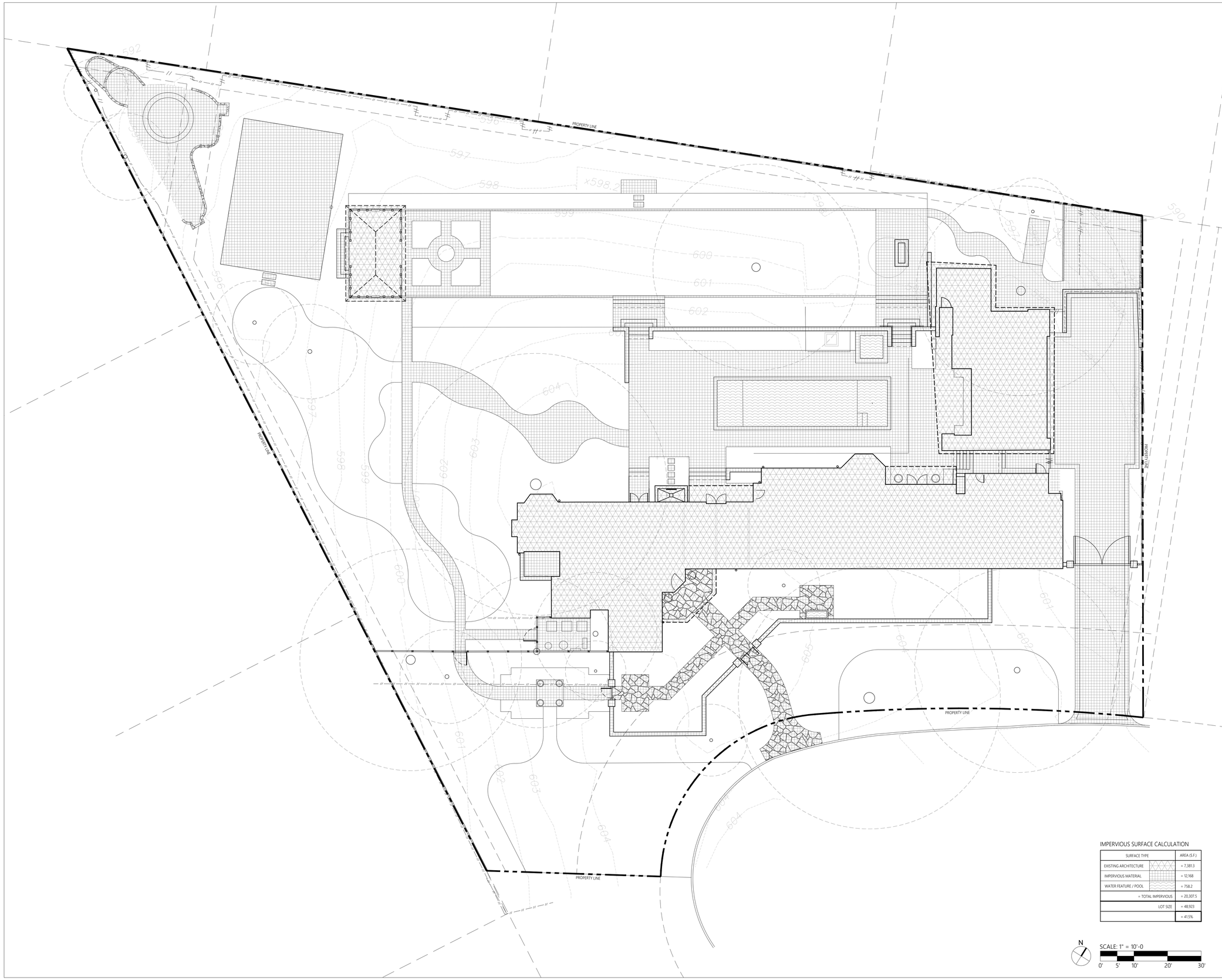

IMPERVIOUS SURFACE CALCULATION

SURFACE TYPE	AREA (S.F.)
EXISTING ARCHITECTURE	= 7,381.3
IMPERVIOUS MATERIAL	= 12,168
WATER FEATURE / POOL	= 758.2
= TOTAL IMPERVIOUS	= 20,307.5
LOT SIZE	= 48,923
	= 41.5%

JAMES HYATT STUDIO
600 12th Street, Suite 100
Golden, Colorado 80401
T/ 720.539.7907 · C/ 303.810.6113

CONSULTANTS

SIGNATURE & SEAL

KEYMAP

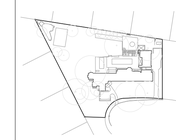

2900 TARRY TRAIL
AUSTIN TX 78703

SUBMITTALS

-	-

REVISIONS

NO.	COMMENTS	DATE
-	-	-

SHEET INFORMATION

DATE	MAY 15, 2023
JOB NUMBER	
DRAWN BY	JM
CHECKED BY	JH

IMPERVIOUS CALC. PLAN

L-102

Copyright 2022 JAMESHYATT STUDIO

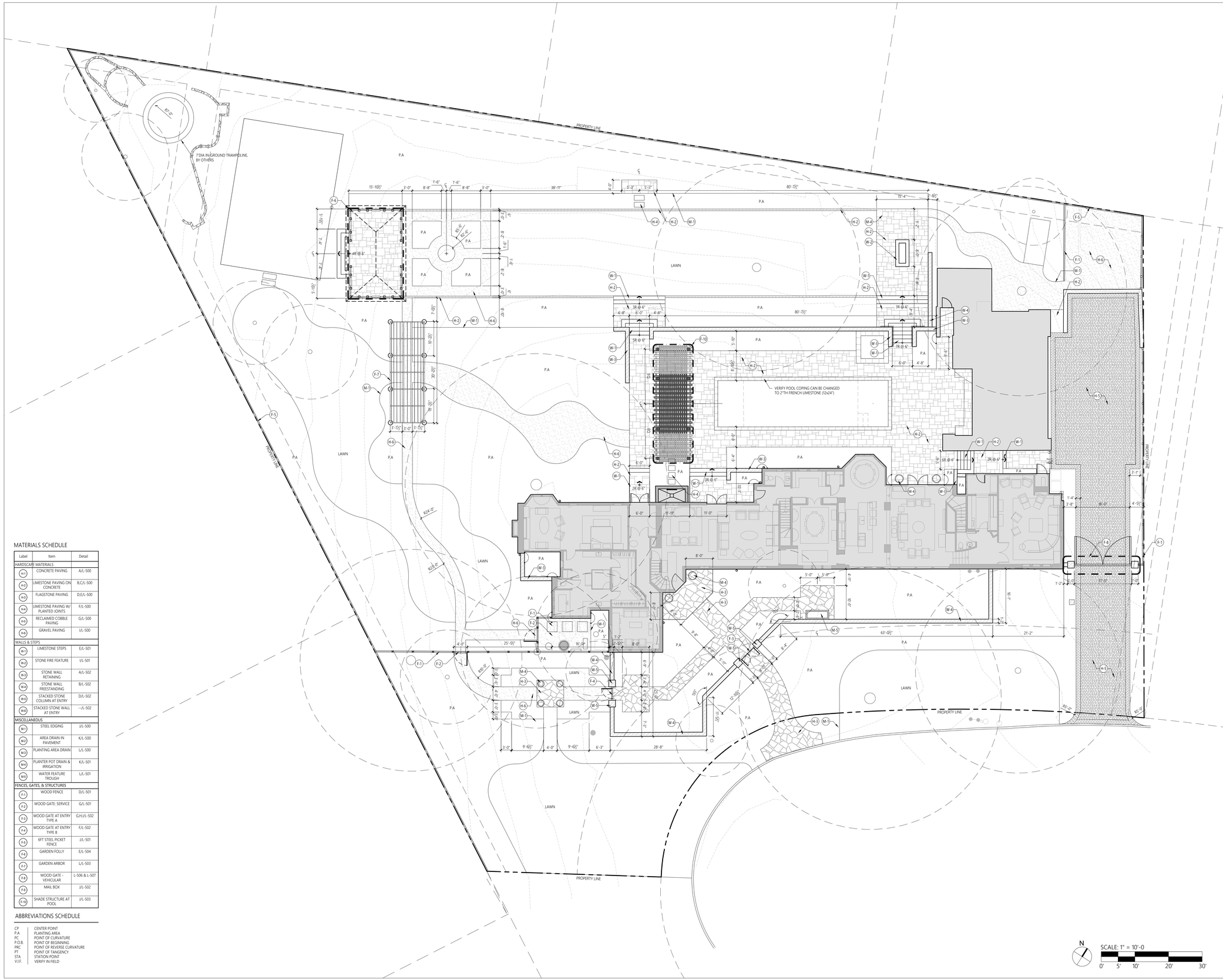

MATERIALS SCHEDULE

Label	Item	Detail
HARDSCAPE MATERIALS		
H-1	CONCRETE PAVING	A/L-500
H-2	LIMESTONE PAVING ON CONCRETE	B,C/L-500
H-3	FLAGSTONE PAVING	D,E/L-500
H-4	LIMESTONE PAVING W/ PLANTED JOINTS	F/L-500
H-5	RECLAIMED COBBLE PAVING	G/L-500
H-6	GRAVEL PAVING	I/L-500
WALLS & STEPS		
W-1	LIMESTONE STEPS	E/L-501
W-2	STONE FIRE FEATURE	I/L-501
W-3	STONE WALL RETAINING	A/L-502
W-4	STONE WALL FREESTANDING	B/L-502
W-5	STACKED STONE COLUMN AT ENTRY	D/L-502
W-6	STACKED STONE WALL AT ENTRY	--/L-502
MISCELLANEOUS		
M-1	STEEL EDGING	J/L-500
M-2	AREA DRAIN IN PAVEMENT	K/L-500
M-3	PLANTING AREA DRAIN	L/L-500
M-4	PLANTER POT DRAIN & IRRIGATION	K/L-501
M-5	WATER FEATURE TROUGH	L/L-501
FENCES, GATES, & STRUCTURES		
F-1	WOOD FENCE	D/L-501
F-2	WOOD GATE: SERVICE	G/L-501
F-3	WOOD GATE AT ENTRY TYPE A	G,H,I/L-502
F-4	WOOD GATE AT ENTRY TYPE B	F/L-502
F-5	6FT STEEL PICKET FENCE	J/L-501
F-6	GARDEN FOLLY	E/L-504
F-7	GARDEN ARBOR	L/L-503
F-8	WOOD GATE - VEHICULAR	L-506 & L-507
F-9	MAIL BOX	J/L-502
F-10	SHADE STRUCTURE AT POOL	J/L-503

ABBREVIATIONS SCHEDULE

CP	CENTER POINT
P.A	PLANTING AREA
PC	POINT OF CURVATURE
P.O.B.	POINT OF BEGINNING
PRC	POINT OF REVERSE CURVATURE
PT	POINT OF TANGENCY
STA	STATION POINT
V.I.F.	VERIFY IN FIELD

JAMES HYATT STUDIO

600 12th Street, Suite 100
Golden, Colorado 80401
T/ 720.539.7907 C/ 303.810.6113

CONSULTANTS

SIGNATURE & SEAL

KEYMAP

2900 TARRY TRAIL
AUSTIN TX 78703

SUBMITTALS

-	-

REVISIONS

NO.	COMMENTS	DATE
-	-	-

SHEET INFORMATION

DATE	MAY 15, 2023
JOB NUMBER	
DRAWN BY	JM
CHECKED BY	JH

LAYOUT & MATERIALS PLAN

L-201

Copyright 2022 JAMESHYATT STUDIO

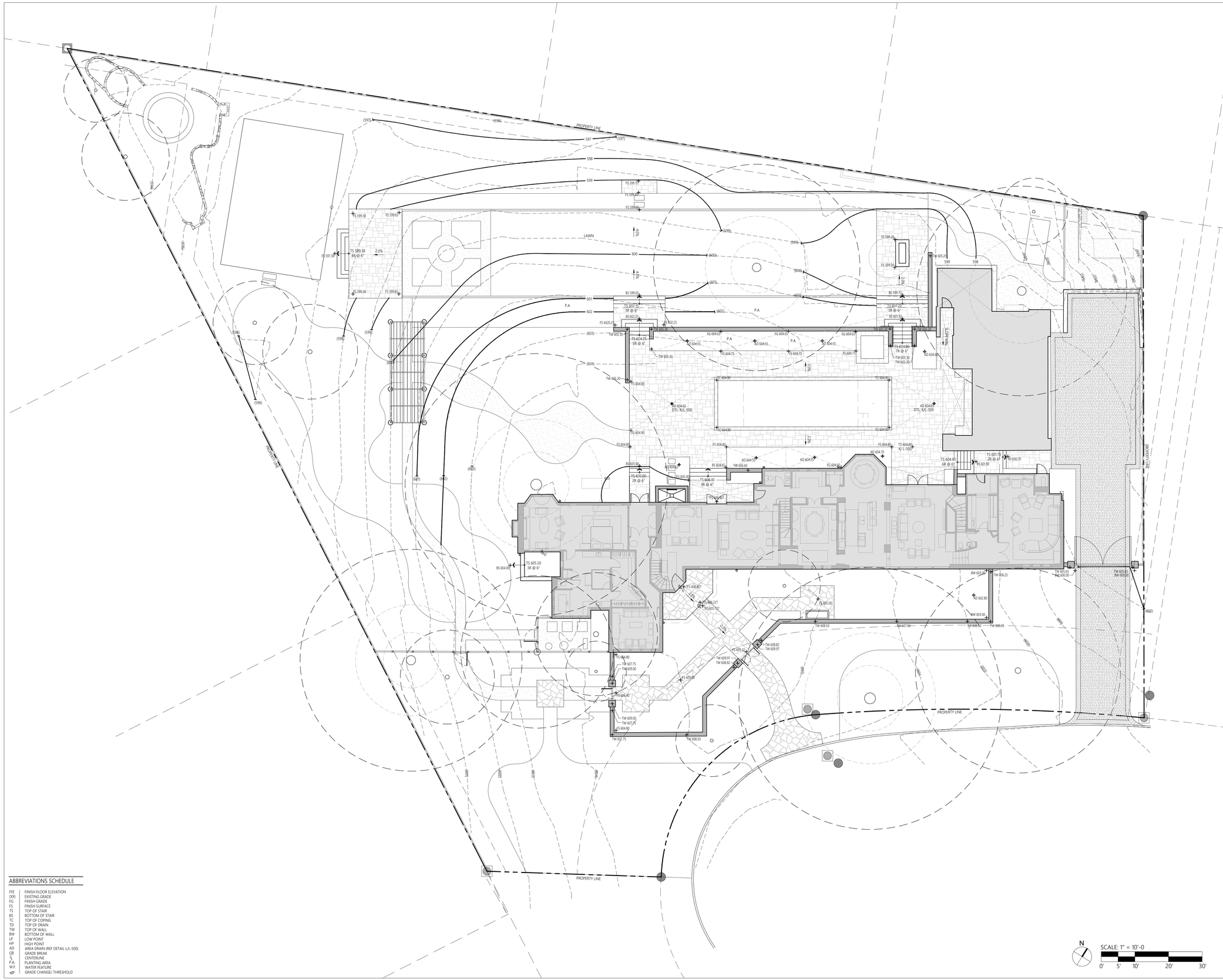

ABBREVIATIONS SCHEDULE

FFE	FINISH FLOOR ELEVATION
(XX)	EXISTING GRADE
FG	FINISH GRADE
FS	FINISH SURFACE
TS	TOP OF STAIR
BS	BOTTOM OF STAIR
TC	TOP OF COPING
TD	TOP OF DRAIN
TW	TOP OF WALL
BW	BOTTOM OF WALL
LP	LOW POINT
HP	HIGH POINT
AD	AREA DRAIN (REF DETAIL L/L-500)
GB	GRADE BREAK
℄	CENTERLINE
P.A.	PLANTING AREA
W.F.	WATER FEATURE
	GRADE CHANGE/ THRESHOLD

JAMES HYATT STUDIO

600 12th Street, Suite 100
Golden, Colorado 80401
T/ 720.539.7907 C/ 303.810.6113

CONSULTANTS

SIGNATURE & SEAL

KEYMAP

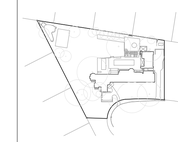

2900 TARRY TRAIL
AUSTIN TX 78703

SUBMITTALS

-	-

REVISIONS

NO.	COMMENTS	DATE
-	-	-

SHEET INFORMATION

DATE	MAY 15, 2023
JOB NUMBER	
DRAWN BY	JM
CHECKED BY	JH

SITE GRADING PLAN

L-301

Copyright 2022 JAMESHYATT STUDIO

PLANT SCHEDULE

TREES	QTY	BOTANICAL NAME	COMMON NAME	MIN. SIZE	CONTAINER	MIN. SPACING	REMARKS
LAG WHI	12	LAGERSTROEMIA INDICA X FAURIEI 'NATCHEZ'	NATCHEZ CRAPE MYRTLE MULTI-TRUNK	12` HT.	B&B	12` O.C.	
QUE SHU	2	QUERCUS SHUMARDII	SHUMARD OAK	96" BOX	BOX	AS SHOWN	
ULM PAR	3	ULMUS PARVIFOLIA	LACEBARK ELM	72" BOX	BOX	AS SHOWN	
ORNAMENTAL TREES	QTY	BOTANICAL NAME	COMMON NAME	MIN. SIZE	CONTAINER	MIN. SPACING	REMARKS
SOP SEC	2	SOPHORA SECUNDIFLORA	TEXAS MOUNTAIN LAUREL	36" BOX	BOX	AS SHOWN	MULTI-TRUNK
SHRUBS	QTY	BOTANICAL NAME	COMMON NAME	MIN. SIZE	CONTAINER	MIN. SPACING	REMARKS
ABE GRA	131	ABELIA X GRANDIFLORA 'PROSTRATA'	PROSTRATE GLOSSY ABELIA	10 GAL.	CONTAINER	48" O.C.	
AGA AM2	7	AGAVE AMERICANA	CENTURY PLANT	24" BOX	BOX	48" O.C.	
ART PO2	136	ARTEMISIA X 'POWIS CASTLE'	POWIS CASTLE ARTEMISIA	3 GAL.	CONTAINER	18" O.C.	
BUX WGM	424	BUXUS MICROPHYLLA JAPONICA 'WINTER GEM'	WINTER GEM JAPANESE BOXWOOD	7 GAL.	CONTAINER	24" O.C.	
HIB SYR	12	HIBISCUS SYRIACUS	ROSE OF SHARON	30 GAL.	CONTAINER	60" O.C.	
HYD QUE	61	HYDRANGEA QUERCIFOLIA	OAKLEAF HYDRANGEA	10 GAL.	CONTAINER	42" O.C.	
ILE BU2	14	ILEX CORNUTA 'BURFORDII'	BURFORD HOLLY	15 GAL.	CONTAINER	42" O.C.	
ILE NAN	196	ILEX VOMITORIA 'NANA'	DWARF YAUPON HOLLY	5 GAL.	CONTAINER	24" O.C.	
ILE NEL	18	ILEX X 'NELLIE R. STEVENS'	NELLIE R. STEVENS HOLLY	30 GAL.	CONTAINER	8` O.C.	
LIG TEX	139	LIGUSTRUM JAPONICUM `TEXANUM`	TEXAS JAPANESE PRIVET	15 GAL.	CONTAINER	48" O.C.	
LIR BIG	408	LIRIOPE MUSCARI 'BIG BLUE'	BIG BLUE LILYTURF	1 GAL.	CONTAINER	12" O.C.	
MAL VA2	83	MALVAVISCUS ARBOREUS DRUMMONDII	GIANT TURK'S CAP	5 GAL.	CONTAINER	36" O.C.	
MIM BOR	16	MIMOSA BOREALIS	FRAGRANT MIMOSA	7 GAL.	CONTAINER	36" O.C.	
NEP WAL	80	NEPETA X FAASSENII 'WALKER'S LOW'	WALKER'S LOW CATMINT	5 GAL.	CONTAINER	24" O.C.	
PER LIT	95	PEROVSKIA ATRIPLICIFOLIA `LITTLE SPIRE`	LITTLE SPIRE RUSSIAN SAGE	5 GAL.	CONTAINER	36" O.C.	
PIT TOB	12	PITTOSPORUM TOBIRA	JAPANESE PITTOSPORUM	10 GAL.	CONTAINER	60" O.C.	
PIT W14	5	PITTOSPORUM TOBIRA 'WHEELER'S DWARF'	WHEELER'S DWARF PITTOSPORUM	5 GAL.	CONTAINER	36" O.C.	
PLU RO2	68	PLUMBAGO AURICULATA 'MONOTT'	ROYAL CAPE® PLUMBAGO	10 GAL.	CONTAINER	36" O.C.	
PRU CEN	82	PRUNUS CAROLINIANA 'GRECCT'	CENTRE COURT™ CAROLINA LAUREL CHERRY	15 GAL.	CONTAINER	30" O.C.	
ROS MDL	59	ROSA X 'MARIE DALY'	MARIE DALY POLYANTHA ROSE	5 GAL.	CONTAINER	36" O.C.	
ROS OFF	30	ROSMARINUS OFFICINALIS	ROSEMARY	5 GAL.	CONTAINER	36" O.C.	
ROS HUN	148	ROSMARINUS OFFICINALIS `HUNTINGTON CARPET`	HUNTINGTON CARPET ROSEMARY	5 GAL.	CONTAINER	30" O.C.	
SAL SCA	200	SALVIA COCCINEA	SCARLET SAGE	1 GAL.	CONTAINER	18" O.C.	
SAL FAR	31	SALVIA FARINACEA 'HENRY DUELBERG'	'HENRY DUELBERG' SALVIA	5 GAL.	CONTAINER	24" O.C.	
SAL ULT	35	SALVIA X `ULTRA VIOLET`	ULTRA VIOLET SAGE	3 GAL.	CONTAINER	24" O.C.	
SPI BRI	12	SPIRAEA PRUNIFOLIA 'BRIDALWREATH'	BRIDAL WREATH SPIREA	15 GAL.	CONTAINER	42" O.C.	
THE KUN	118	THELYPTERIS KUNTHII	SOUTHERN SHIELD FERN	3 GAL.	CONTAINER	30" O.C.	
GRASSES	QTY	BOTANICAL NAME	COMMON NAME	MIN. SIZE	CONTAINER	MIN. SPACING	REMARKS
PEN HAM	361	PENNISETUM A. 'HAMELN	HAMELN'S FOUNTAIN GRASS	3 GAL.	CONTAINER	24" O.C.	
MUH CAP	45	MUHLENBERGIA CAPILLARIS	PINK MUHLY GRASS	5 GAL.	CONTAINER	36" O.C.	
VINE/ESPALIER	QTY	BOTANICAL NAME	COMMON NAME	MIN. SIZE	CONTAINER	MIN. SPACING	REMARKS
FIC PUM	35	FICUS PUMILA	CREEPING FIG	15 GAL.	CONTAINER	48" O.C.	
PAR TRI	23	PARTHENOCISSUS TRICUSPIDATA	BOSTON IVY	15 GAL.	CONTAINER	48" O.C.	
TRA JAS	16	TRACHELOSPERMUM JASMINOIDES	CHINESE STAR JASMINE	15 GAL.	CONTAINER	AS SHOWN	VINE
GROUND COVERS	QTY	BOTANICAL NAME	COMMON NAME	MIN. SIZE	CONTAINER	MIN. SPACING	REMARKS
CAR DIV	4,153	CAREX DIVULSA	EUROPEAN GREY SEDGE	6" POTS	POT	12" O.C.	
LAN MON	396	LANTANA MONTEVIDENSIS	TRAILING LANTANA	1 GAL.	CONTAINER	24" O.C.	
-	9,138 SF	LAWN	-	SOD			
OPH JAP	462	OPHIOPOGON JAPONICUS	MONDO GRASS	6" POTS	POT	6" O.C.	
STA BYZ	4	STACHYS BYZANTINA	LAMB'S EAR	1 GAL.		18" O.C.	
TRA ASI	153	TRACHELOSPERMUM ASIATICUM	ASIATIC JASMINE	6" POTS	POT	18" O.C.	
SPECIALTY	QTY	BOTANICAL NAME	COMMON NAME	MIN. SIZE	CONTAINER	AS SHOWN	REMARKS
BUX MIC	68	BUXUS MICROPHYLLA JAPONICA - TOPIARY GLOBES	JAPANESE BOXWOOD - TOPIARY GLOBES	(20) 20" D., (14) 24" D., (10) 32" D., (14) 36" D., (10) 44" D.	CONTAINER	AS SHOWN	GLOBES

SPECIAL NOTES:
1. PLANT QUANTITIES ARE PROVIDED FOR CONVENIENCE ONLY. CONTRACTOR IS RESPONSIBLE FOR CONDUCTING THEIR OWN PLANT QUANTITY TAKE-OFFS AND INSURE FINAL INSTALLATION IS PER DESIGN INTENT SHOWN ON PLANS. CONTRACTOR IS TO MAKE LANDSCAPE ARCHITECT AWARE OF ANY DISCREPANCIES.
2. PLANT SUBSTITUTIONS MAY BE ALLOWED DUE TO AVAILABILITY ISSUES, HOWEVER, ALL PROPOSED SUBSTITUTIONS SHALL BE REVIEWED, AND APPROVED, BY LANDSCAPE ARCHITECT PRIOR TO PURCHASING.
3. ALL PLANTING BEDS TO CONTAIN 2-3" BARK MULCH, CONTRACTOR TO PROVIDE SAMPLES FOR LANDSCAPE ARCHITECT'S APPROVAL.

N

SCALE: 1" = 10'-0

0' 5' 10' 20' 30'

JAMES HYATT STUDIO

600 12th Street, Suite 100
Golden, Colorado 80401
T/ 720.539.7907 C/ 303.810.6113

CONSULTANTS

SIGNATURE & SEAL

KEYMAP

2900 TARRY TRAIL
AUSTIN TX 78703

SUBMITTALS

-	-

REVISIONS

NO.	COMMENTS	DATE
-	-	-

SHEET INFORMATION

DATE	MAY 15, 2023
JOB NUMBER	
DRAWN BY	JM
CHECKED BY	JH

PLANTING SCHEDULE & NOTES

L-400

Copyright 2022 JAMESHYATT STUDIO

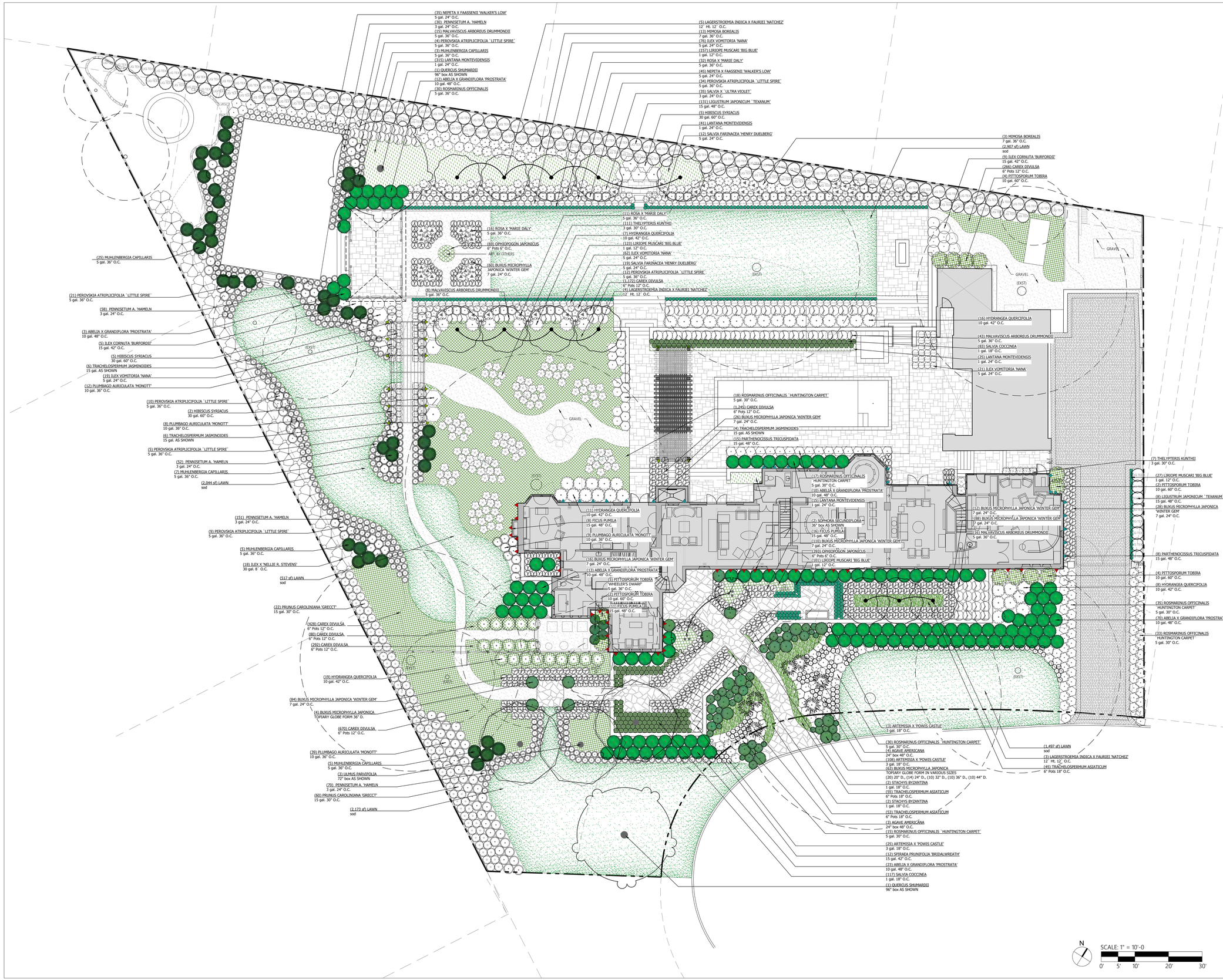

JAMES HYATT STUDIO

600 12th Street, Suite 100
Golden, Colorado 80401
T/ 720.539.7907 C/ 303.810.6113

CONSULTANTS

SIGNATURE & SEAL

KEYMAP

2900 TARRY TRAIL
AUSTIN TX 78703

SUBMITTALS

-	-

REVISIONS

NO.	COMMENTS	DATE
-	-	-

SHEET INFORMATION

DATE	MAY 15, 2023
JOB NUMBER	
DRAWN BY	JM
CHECKED BY	JH

SITE PLANTING PLAN

L-401

Copyright 2022 JAMESHYATT STUDIO

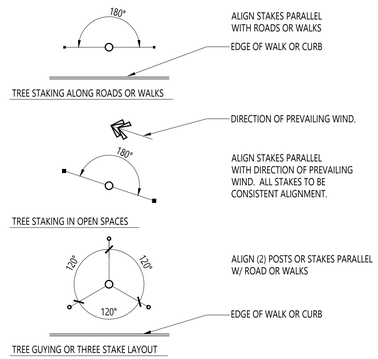

E TREE STAKING & GUYING PLAN

SCALE: NOT TO SCALE

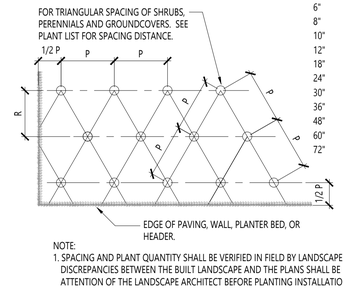

TYPICAL SPACING CHART

P TRIANGULAR	R ROW	AREA PER PLANT SQ. FT.
4"	3 7/16"	.096
6"	5 1/4"	.22
8"	7"	.385
10"	8 3/4"	.60
12"	10 3/8"	.87
18"	15 5/8"	1.95
24"	20 3/4"	3.46
30"	26"	5.42
36"	31"	7.80
48"	41 1/2"	13.84
60"	52"	21.65
72"	62 3/8"	31.20

NOTE:
1. SPACING AND PLANT QUANTITY SHALL BE VERIFIED IN FIELD BY LANDSCAPE CONTRACTOR. ANY DISCREPANCIES BETWEEN THE BUILT LANDSCAPE AND THE PLANS SHALL BE BROUGHT TO THE ATTENTION OF THE LANDSCAPE ARCHITECT BEFORE PLANTING INSTALLATION.

C TYPICAL TRIANGULAR PLANT SPACING

SCALE: NOT TO SCALE

DT-PLNT-SPACING.dwg

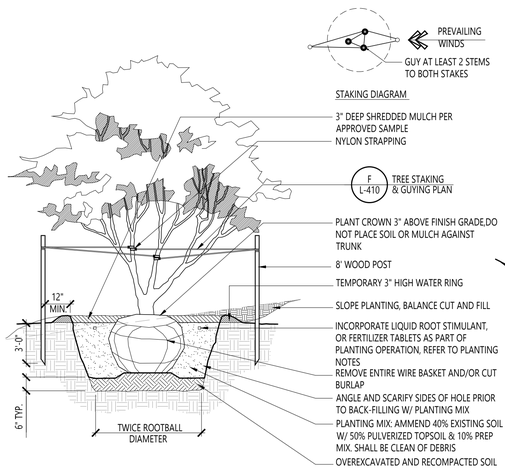

G MULTI-TRUNK TREE PLANTING

SCALE: NOT TO SCALE

DT-PLNT-MULTITREE.dwg

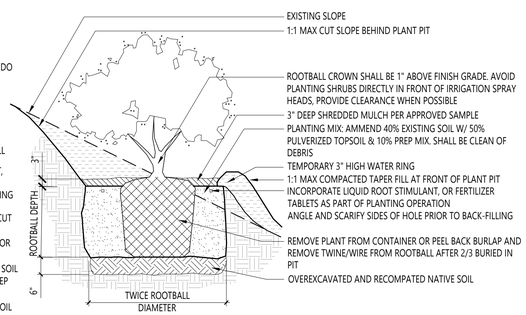

D SHRUB PLANTING ON SLOPE

SCALE: NOT TO SCALE

DT-PLNT-SHRUB-SLOPE.dwg

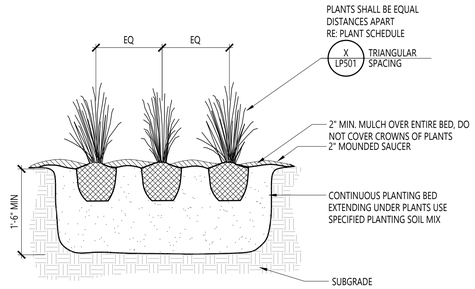

B ORNAMENTAL GRASS PLANTING

SCALE: NOT TO SCALE

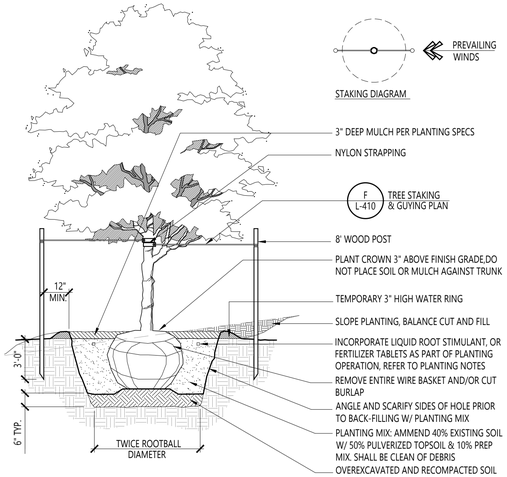

F DECIDUOUS TREE PLANTING

SCALE: NOT TO SCALE

DT-PLNT-DECTREE.dwg

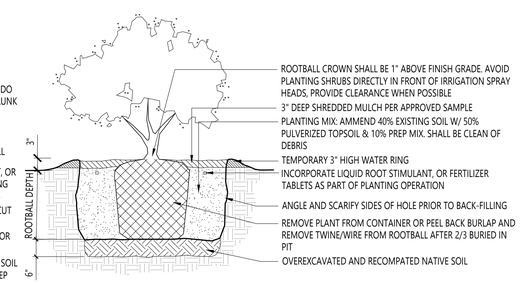

C SHRUB PLANTING

SCALE: NOT TO SCALE

DT-PLNT-SHRUB.dwg

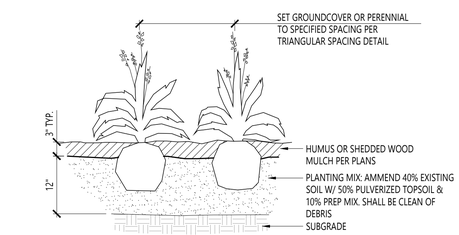

NOTE:
1. MIN. ROOT SPREAD TO BE IN ACCORDANCE WITH 'AMERICAN STANDARDS FOR NURSERY STOCK'
2. PRUNE ALL DAMAGED, DISEASED, OR WEAK LIMBS AND ROOTS.
3. CLEANLY PRUNE ALL DAMAGED ROOT ENDS.
4. DO NOT ALLOW ROOTS TO DRY OUT DURING INSTALLATION PROCESS

A GROUNDCOVER & PERENNIAL PLANTING

SCALE: NOT TO SCALE

DT-PLNT-GCOVR.dwg

JAMES HYATT STUDIO
600 12th Street, Suite 100
Golden, Colorado 80401
T/ 720.539.7907 C/ 303.810.6113

CONSULTANTS

SIGNATURE & SEAL

KEYMAP

2900 TARRY TRAIL
AUSTIN TX 78703

SUBMITTALS

-	-

REVISIONS

NO.	COMMENTS	DATE
-	-	-

SHEET INFORMATION

DATE	MAY 15, 2023
JOB NUMBER	
DRAWN BY	JM
CHECKED BY	JH

SITE PLANTING DETAILS

L-410

Copyright 2022 JAMESHYATT STUDIO

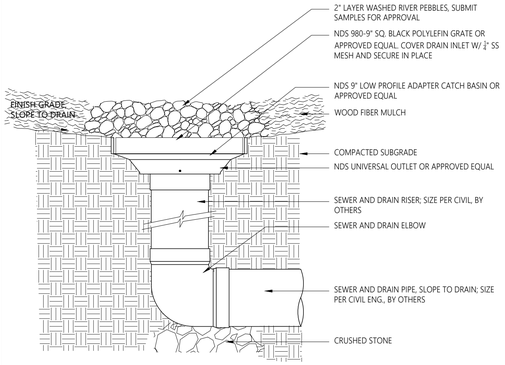

L PLANTING AREA DRAIN

SCALE: 2" = 1'-0"

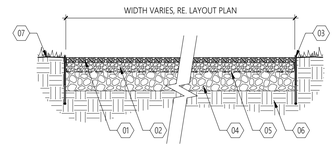

01 ¾" +/- TOPDRESS LAYER OF LOOSE ¼" MINUS CRUSHED STONE, APPLY AFTER STABILIZE BASE SETS UP, PROVIDE COLOR SAMPLES FOR APPROVAL

02 2" COMPACTED LAYER ¾" - 1" CRUSHED STONE WITH STABILIZER SOLUTION'S STABILIZER BINDER THOROUGHLY PRE-MIXED W/ AGGREGATE PER MANUF. SPECS.

03 STEEL EDGING, REF. DETAIL J/L-500

04 4" COMPACTED AGGREGATE BASE COURSE PER GEOTECH

05 FILTER FABRIC

06 COMPACTED SUBGRADE

07 ADJACENT SURFACE, REF. LAYOUT AND MATERIALS PLAN

I PEDESTRIAN GRAVEL PATH

SCALE: 1" = 1'-0"

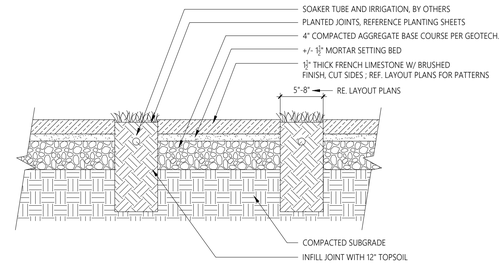

STONE SPECIFICATIONS:
TYPE: FRENCH LIMESTONE
THICKNESS: ½"TH
SIZE: 18"W x 30"L
FINISH: BRUSHED FINISH, SAW CUT SIDES

STONE SOURCE: ALISANNEWONDERLAND.COM
STONE REP: ALISANNE FREW
TELE: 1(832)-558-1016
EMAIL: ALISANNEFREW@ME.COM

F LIMESTONE PAVING W/ PLANTED JOINTS

SCALE: 1 1/2" = 1'-0"

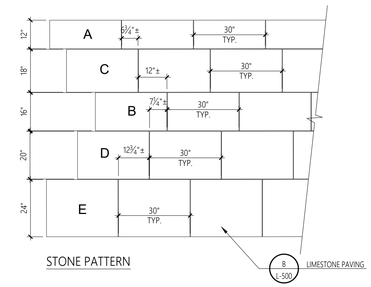

STONE PATTERN

C STONE PATTERN ENLARGEMENT - LIMESTONE

SCALE: 1/2" = 1'-0"

NOTE:
REF. LAYOUT AND MATERIALS SERIES & DETAIL C/L-500 FOR ENLARGEMENT OF LIMESTONE PAVING PATTERN

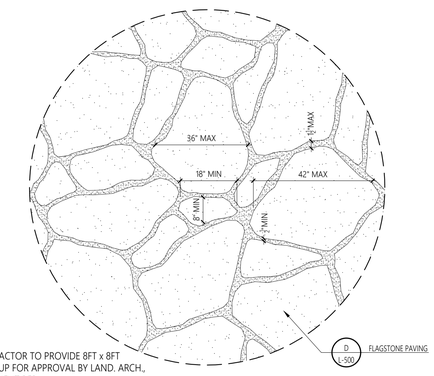

NOTE:
CONTRACTOR TO PROVIDE 8FT x 8FT MOCK-UP FOR APPROVAL BY LAND. ARCH., AND CLIENT REP.

PAVER THICKNESS: ¾" - 1½"
PAVER WIDTH VARIES: 8"MIN. - 36"MAX
PAVER LENGTH VARIES: 18"MIN. - 42"MAX
JOINT WIDTH: ¾"MIN - 1½"MAX

E STONE PATTERN ENLARGEMENT - FLAGSTONE

SCALE: 1/2" = 1'-0"

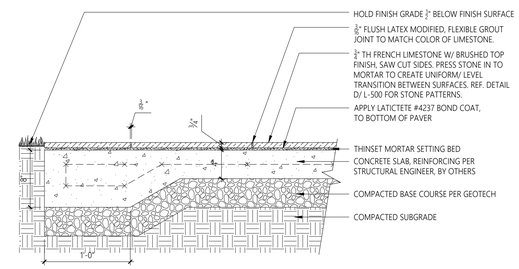

STONE SPECIFICATIONS:
TYPE: FRENCH LIMESTONE
THICKNESS: 3/4" TH
FINISH: BRUSHED FINISH, SAW CUT SIDES

STONE SOURCE: ALISANNEWONDERLAND.COM
STONE REP: ALISANNE FREW
TELE: 1(832)-558-1016
EMAIL: ALISANNEFREW@ME.COM

B LIMESTONE PAVING ON CONCRETE

SCALE: 1 1/2" = 1'-0"

K

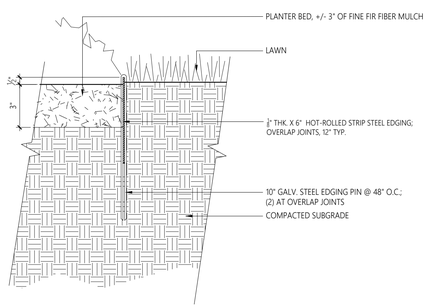

J STEEL EDGING

SCALE: 3" = 1'-0"

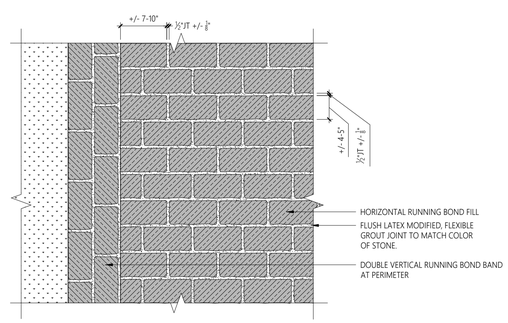

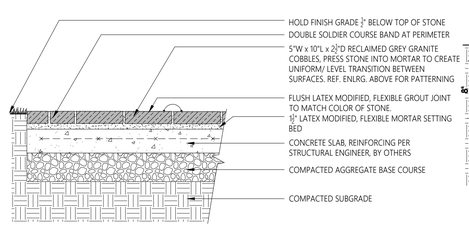

STONE SPECIFICATIONS:
TYPE: RECLAIMED GRANITE COBBLE
SIZE: MEDIUM: ~10"L x 5"W x 5"D (CUT IN HALF TO 2.5"D)

STONE SOURCE: OLDE NEW ENGLAND GRANITE
STONE REP: AHMED ELSHARIF
T: 781-334-4805
E: AHMED@OLDENEWENGLANDGRANITE.COM

G RECLAIMED COBBLE PAVING

SCALE: 1" = 1'-0"

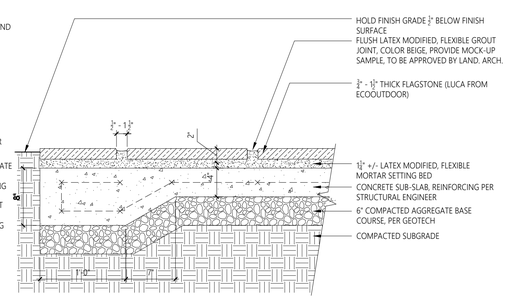

STONE SPECIFICATIONS:
TYPE: LUCA FLAGSTONE
THICKNESS: ¾" - 1½"TH
FINISH: NATURAL BED FACE

STONE SOURCE: ECO OUTDOOR
STONE REP: LILY MAZUR
TELE: 1(747)-239-8075EMAIL:
LIL.M@ECOOUTDOORUSA.COM

D FLAGSTONE PAVING

SCALE: 1 1/2" = 1'-0"

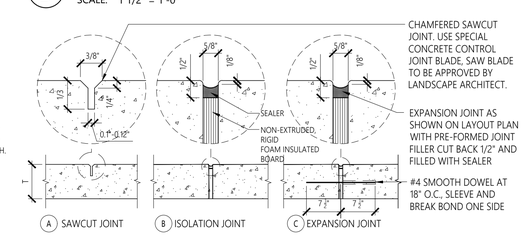

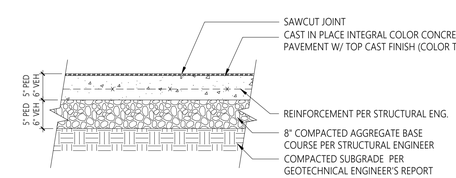

NOTE:
1. REINFORCED CONCRETE PAVEMENT SHALL HAVE 1/8" WIDE SAWCUT CONSTRUCTION JOINTS NO GREATER THAN 8'-0" ON CENTER EACH WAY MAX. AND 3/8" BIT. EXPANSION JOINTS 32' O.C. EACH DIRECTION MAX.
2. CONTRACTOR TO PROVIDE 8' X 8' SAMPLE PANEL WITH SAWCUT JOINTS AND JOINT SEALANT TO BE APPROVED BY LANDSCAPE ARCHITECT PRIOR TO CONSTRUCTION.

A CONCRETE PAVING AND JOINTS

SCALE: 1" = 1'-0"

JAMES HYATT STUDIO
600 12th Street, Suite 100
Golden, Colorado 80401
T/ 720.539.7907 C/ 303.810.6113

CONSULTANTS

SIGNATURE & SEAL

KEYMAP

2900 TARRY TRAIL
AUSTIN TX 78703

SUBMITTALS

-	-

REVISIONS

NO.	COMMENTS	DATE
-	-	-

SHEET INFORMATION

DATE	MAY 15, 2023
JOB NUMBER	
DRAWN BY	JM
CHECKED BY	JH

SITE DETAILS

L-500

Copyright 2022 JAMESHYATT STUDIO

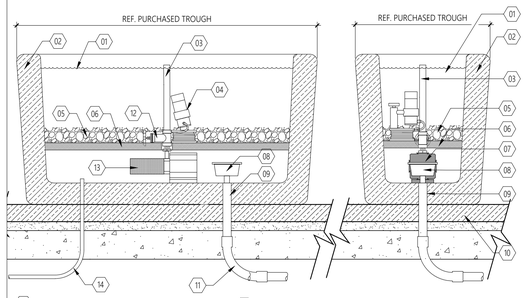

01 WATER LINE
02 ANTIQUE PLANTER POT PROVIDED BY OWNER
03 ¾" BRASS PIPE
04 LIGHT FIXTURE-AURORALIGHT 'H$_2$011-SERENA'; RE. LIGHTING PLAN
05 MEXICAN BEACH PEBBLES
06 MOLDED FRP GRATING, GREY, 1" DEPTH, ¾" THK. BAR, 1½" MESH SIZE
07 DANNER SUPREME AQUA-MAG MAGNETIC DRIVE SUBMERSIBLE PUMP-MODEL 7 ITEM # 02517
08 HYDREL JB1710 UNDERWATER J-BOX FOR CONNECTIONS TO PUMP & LIGHT; INSTALL PER MANUF. REC'S. & IN ACCORDANCE W/ THE NAT'L ELECTRIC CODE & RELEVANT LOCAL CODES. ENCAPSULATE J-BOX. IF POSSIBLE, BOND J-BOX TO REBAR IN CONC. SUB-SLAB
09 WATERPROOF SEAL ALL PENETRATIONS
10 PAVING; RE. LAYOUT PLAN
11 ELECTRICAL CONDUIT
12 BRASS GATE VALVE
13 IN-LINE FOAM PRE-FILTER
14 ¾" AUTO-FILL LINE TIED TO DEDICATED IRRIGATION VALVE

L TROUGH FOUNTAIN
SCALE: NTS

STONE SPECIFICATIONS:
TYPE: FRENCH LIMESTONE
SIZE: MONOLITH, REF DETAIL DIMS.
FINISH: BRUSHED FINISH, SAW CUT SIDES

STONE SOURCE:
ALISANNEWONDERLAND.COM
STONE REP: ALISANNE FREW
TELE: 1(832)-558-1016
EMAIL: ALISANNEFREW@ME.COM

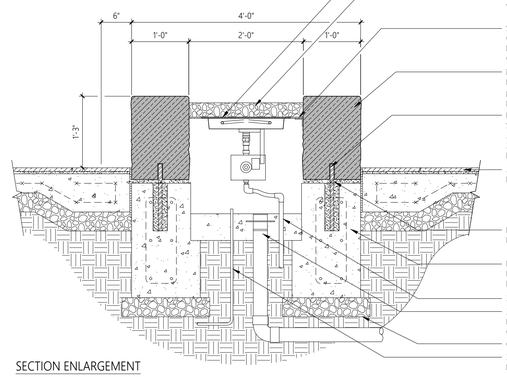

SECTION ENLARGEMENT

RECTANGULAR H-BURNER INSERT W/ REMOTE ELECTRONIC IGNITION CONTROL, 66" X 16" FROM HPC FIRE (HEARTH PRODUCTS CONTROLS, CO.) 250K STND. BTU, MODEL # TOR-66X16SSEI-H-HI/LO-NG/120VAC; INSTALL PER MANUF. RECOMMENDATIONS - WWW.HPCFIRE.COM
FIRE MEDIA: FILL FIRE KIT TRAY W/ 1½" OF SMALL BLACK 'LAVASTONE', THEN TOP W/UNIFORM COVER OF "½" MOONSTONE PALE' FROM "SPARK MODERN FIRE"
SS PERFORATED 16 GA. SUPPORT PLATE SET ON ANGLE SUPPORTS W/ HOLE CUTOUT FOR FIREPIT KIT, ANGLE SUPPORT SIZING AND CONNECTIONS, BY OTHERS
MONOLITHIC FRENCH LIMESTONE FIRE PIT SURROUND; BRUSHED TOP AND FACE, SAWN SIDES AND BOTTOM FOR CLEAN ¼" JOINTS, PROVIDE ¼" EASED EDGE AT ALL EXPOSED CORNERS
DRILL & GROUT #6 X 16" REBAR INTO STONE SURROUND, (3) PER STONE SECTION. ALIGN W/ FOUNDATION SLEEVES. 3"Ø CORRUGATED PIPE SLEEVE CAST INTO FOOTING. CENTER IN FOOTING.
ADJACENT LIMESTONE PAVING, REF. DETAIL: B/L-500
POLYMER MODIFIED THICK MORTAR SETTING BED
REINFORCED CONCRETE CORE, FOOTING SIZE, DEPTH, AND REINFORCEMENT PER STRUCT. ENG., BY OTHERS
3/4" -1" GAS SUPPLY LINE
3" X 4" BRASS FLOOR DRAIN W/ STRAINER & DRAINLINE, RE. CIVIL PLANS FOR POINT OF CONNECTION
COMPACTED AGGREGATE BASE COURSE
3/4" ELECTRICAL CONDUIT TO TIE INTO REMOTE CONTROL TIMER

PLAN ENLARGEMENT

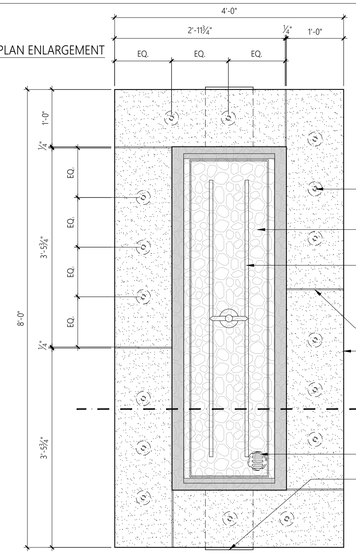

NOTE:
1. GAS LINE SAFETY SWITCH & CONTROLS TO BE INSTALLED PER SPECIALIST TO MEET LOCAL CODE REQUIREMENTS. REVIEW LOCATION W/ L. ARCH. PRIOR TO INSTALLATION.
2. PROVIDE VENTING PER MANUFACTURER'S REQ., CORE DRILL STONE MONOLITH ON OPPOSITE SIDES AND PROVIDE (2)2x10 OIL RUBBED BRONZE VENT GRILLS

DRILL & GROUT #6 X 16" REBAR INTO STONE SURROUND, (3) PER STONE SECTION. ALIGN W/ FOUNDATION SLEEVES. 3"Ø CORRUGATED PIPE SLEEVE CAST INTO FOOTING. CENTER IN FOOTING.
FIRE MEDIA: FILL FIRE KIT TRAY W/ 1½" OF SMALL BLACK 'LAVASTONE', THEN TOP W/UNIFORM COVER OF "½" MOONSTONE PALE' FROM "SPARK MODERN FIRE"
RECTANGULAR H-BURNER INSERT W/ REMOTE ELECTRONIC IGNITION CONTROL, 66" X 16" FROM HPC FIRE (HEARTH PRODUCTS CONTROLS, CO.) 250K STND. BTU, MODEL # TOR-66X16SSEI-H-HI/LO-NG/120VAC; INSTALL PER MANUF. RECOMMENDATIONS WWW.HPCFIRE.COM
FLUSH LATEX MODIFIED, FLEXIBLE GROUT JOINT TO MATCH COLOR OF STONE.
MONOLITHIC FRENCH LIMESTONE FIRE PIT SURROUND; BRUSHED TOP AND FACE, SAWN SIDES AND BOTTOM FOR CLEAN ¼" JOINTS, PROVIDE ¼" EASED EDGE AT ALL EXPOSED CORNERS
4" RD. BRASS FLOOR DRAIN W/ STRAINER & 3" DRAIN LINE, COORD. CONNECTION TO DRAINAGE SYSTEM
CORE DRILL STONE MONOLITH ON OPPOSITE SIDES AND PROVIDE (2)2x10 OIL RUBBED BRONZE VENT GRILLS TO MEET MANUFACTURER'S VENTING REQUIREMENTS

I MONOLITHIC STONE FIRE FEATURE
SCALE: 1" = 1'-0"

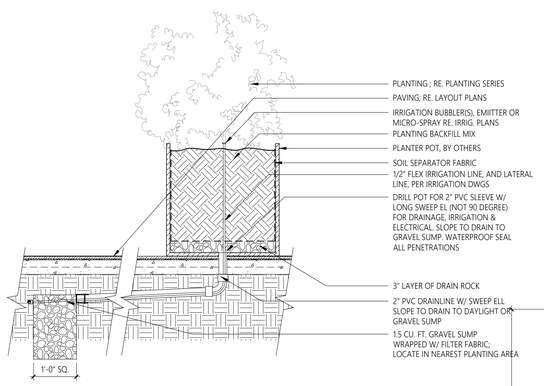

K PLANTER POT DRAINAGE & IRRIGATION
SCALE: 3/4" = 1'-0"

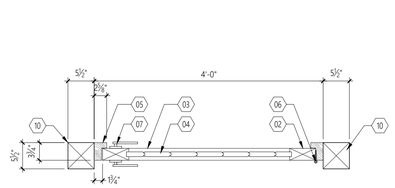

TYPICAL SECTION

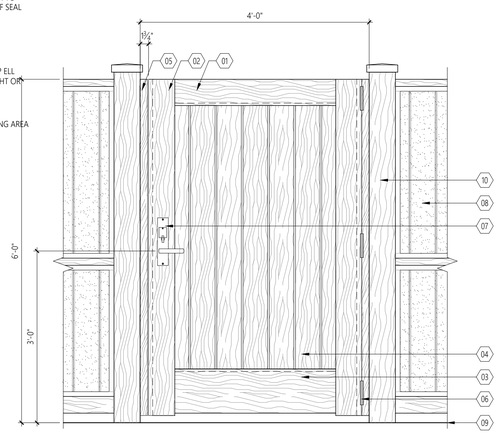

TYPICAL ELEVATION

01 3" x 6" CEDAR TOP RAIL, MORTISE AND TENON SIDE, TOP AND BOTTOM RAIL
02 3" x 6" CEDAR SIDE RAIL, MORTISE AND TENON SIDE, TOP AND BOTTOM RAIL
03 3" x 10" CEDAR BOTTOM RAIL, MORTIS AND TENON SIDE, TOP AND BOTTOM RAIL
04 1" x 6" VERTICAL CEDAR PANEL, T&G PANELS TOGETHER AND PROVIDE ⅜" 'V'-GROOVE BETWEEN ADJOINING MEMBERS
05 CEDAR GATE STOP JAM, L-SHAPE FOR GATE TO SIT FLUSH INSIDE OF JAM
06 ROCKY MOUNTAIN HARDWARE, CONCEALED BEARING BUTT HINGE (HNGSA) W/ STND. FINIAL CAP (⅜" BARREL), WHITE BRONZE DARK (WD) FINISH. SUPPLY W/ ALL 3" SCREWS.
07 ROCKY MOUNTAIN HARDWARE; METRO GATE ENTRY SET COMBINATION, 2½" x 13" (E258) W/ EMILE LEVER (021005), WHITE BRONZE DARK (WD) FINISH.
08 WOOD FENCE, REF DETAIL: G/ L-501
09 FINISH GRADE
10 6" X 6" CEDAR POST

NOTES:
A. WOOD ASSEMBLIES SHALL BE JOINED, SECURED BY THEIR JOINERY RATHER THAN SCREWS OR NAILS.
B. ALL WOOD SHALL BE WESTERN RED CEDAR, FULLY MATURED BEFORE HARVEST AND FREE FROM CUPPINING, BOWING, TWISTING, SPRING, OR DIAMONDING. GROWTH RINGS SHOULD BE APPROXIMATELY ⅛" - ¼" APART WITH A MATURE 32+ RINGS PER INCH. GRAIN PATTERN SHALL BE QUARTER SAWN, AS CLOSE TO 90 DEGREES OFF THE FACE OF THE PLANK AS POSSIBLE. ALL WOOD SHALL HAVE AN AIR-DRIED MOISTURE CONTENT OF NO MORE THAN 7-9%
C. CONTRACTOR TO CONFIRM ALL HARDWARE SPECIFICATIONS PRIOR TO ORDERING OF MATERIALS.

G WOOD GATE: SERVICE
SCALE: 1" = 1'-0"

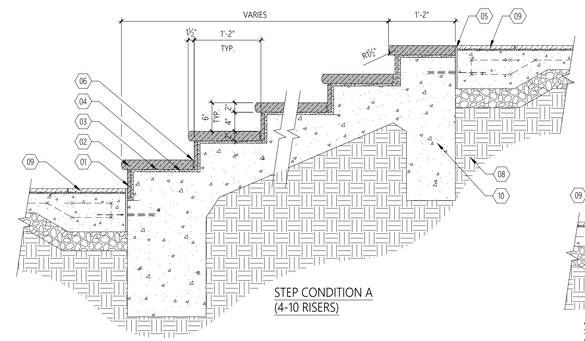

STEP CONDITION A
(4-10 RISERS)

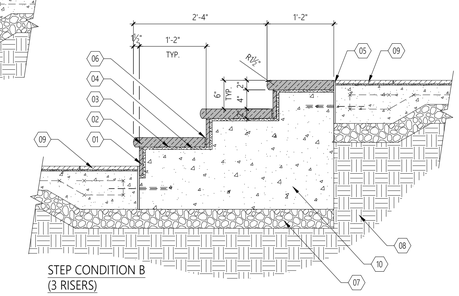

STEP CONDITION B
(3 RISERS)

01 3/4" THICK FRENCH LIMESTONE RISER
02 2" THICK. FRENCH LIMESTONE TREAD, WITH 1½" RADIUS ON NOSING
03 LATICRETE #4237 BOND COAT, APPLY TO BOTTOM OF PAVER
04 ¼" LATEX MODIFIED MORTAR SETTING BED
05 DOWELED CONSTRUCTION JOINT
06 ¼" FLUSH LATEX MODIFIED, FLEXIBLE GROUT JOINT, COLOR TO MATCH STONE.
07 COMPACTED AGGREGATE BASE COURSE PER GEOTECH
08 COMPACTED SUBGRADE
09 ADJACENT LIMESTONE PAVING, REF DETAIL B/L-500
10 REINFORCED CONCRETE CORE, PER STRUCTURAL ENGINEER, BY OTHERS

STONE SPECIFICATIONS:
TYPE: FRENCH LIMESTONE
THICKNESS: 2" TH
FINISH: BRUSHED FINISH, SAW CUT SIDES

STONE SOURCE:
ALISANNEWONDERLAND.COM
STONE REP: ALISANNE FREW
TELE: 1(832)-558-1016
EMAIL: ALISANNEFREW@ME.COM

E LIMESTONE STEPS
SCALE: 1" = 1'-0"

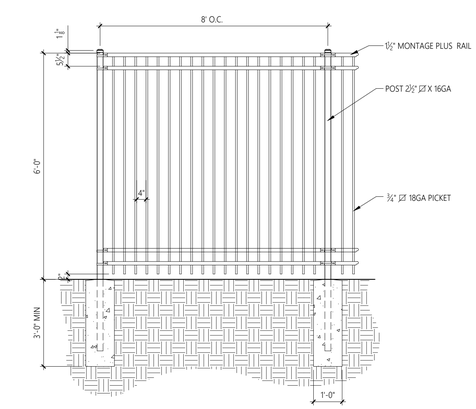

NOTES:
1) 6FT STEEL FENCE - MONTAGE PLUS MAJESTIC, BLACK, FROM AMERISTAR FENCE, INSTALL PER MANUF. SPECIFICATIONS.
2) POST SIZE DEPENDS ON FENCE HEIGHT AND WIND LOADS. SEE MONTAGE PLUS SPECIFICATIONS FOR POST SIZING CHART.

J 6FT STEEL PICKET FENCE
SCALE: 1/2" = 1'-0"

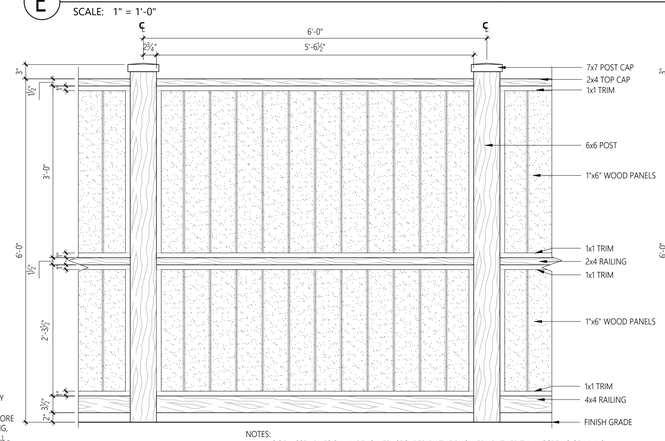

TYPICAL ELEVATION

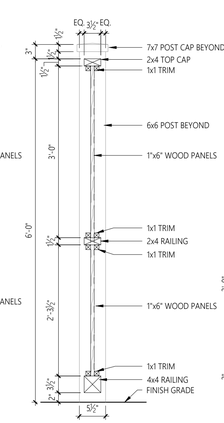

TYPICAL SECTION

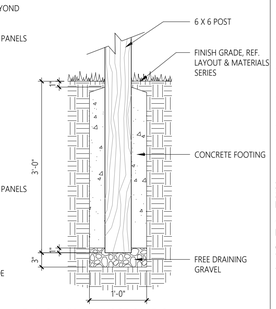

TYPICAL FENCE POST SECTION

NOTES:
A. WOOD ASSEMBLIES SHALL BE JOINED, SECURED BY THEIR JOINERY RATHER THAN SCREWS OR NAILS.
B. ALL WOOD SHALL BE WESTERN RED CEDAR, FULLY MATURED BEFORE HARVEST AND FREE FROM CUPPINING, BOWING, TWISTING, SPRING, OR DIAMONDING. GROWTH RINGS SHOULD BE APPROXIMATELY ⅛" - ¼" APART WITH A MATURE 32+ RINGS PER INCH. GRAIN PATTERN SHALL BE QUARTER SAWN, AS CLOSE TO 90 DEGREES OFF THE FACE OF THE PLANK AS POSSIBLE. ALL WOOD SHALL HAVE AN AIR-DRIED MOISTURE CONTENT OF NO MORE THAN 7-9%
C. CONTRACTOR TO CONFIRM ALL HARDWARE SPECIFICATIONS PRIOR TO ORDERING OF MATERIALS.

D WOOD FENCE
SCALE: 1" = 1'-0"

JAMES HYATT STUDIO
600 12th Street, Suite 100
Golden, Colorado 80401
T/ 720.339.7907 C/ 303.810.6113

CONSULTANTS

SIGNATURE & SEAL

KEYMAP

2900 TARRY TRAIL
AUSTIN TX 78703

SUBMITTALS

-	-

REVISIONS

NO.	COMMENTS	DATE
-	-	-

SHEET INFORMATION

DATE	MAY 15, 2023
JOB NUMBER	
DRAWN BY	JM
CHECKED BY	JH

SITE DETAILS

L-501

Copyright 2022 JAMESHYATT STUDIO

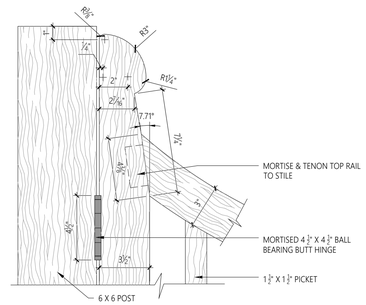

I WOOD GATE AT ENTRY TYPE A - HINGE STILE

SCALE: 3" = 1'-0"

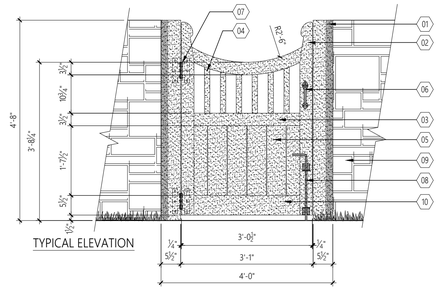

01 6" x 6" CEDAR POST
02 3" x 4" CEDAR STILES
03 3" x 4" CEDAR MID RAILING
04 1 1/2" X 1 1/2" PICKET
05 TONGUE & GROOVE PANEL W/ 1/8" X 1/8" 'V' GROOVE
06 CAST BRONZE GATE THUMB LATCH FROM REJUVENATION, ITEM NO. C103501. INSTALL PER MANUF. RECOM'NS. @ 36" ABOVE FINISH GRADE
07 BALL BEARING BUTT HINGE FROM WHITECHAPEL LTD., 4 1/2" X 4 1/2" ANTIQUED BRASS, MODEL 240MBH1A
08 CAST BRONZE CANE BOLT
09 STONE COLUMN AT ENTRY, REF DETAIL D/L-502
10 3" x 4" CEDAR BOTTOM RAILING

NOTE:
ALL WOOD SHALL BE WESTERN RED CEDAR. PALE GREEN STAIN. SUBMIT SAMPLES TO REVIEW W/ L. ARCH & INTERIORS.

F WOOD GATE AT ENTRY - TYPE B

SCALE: 3/4" = 1'-0"

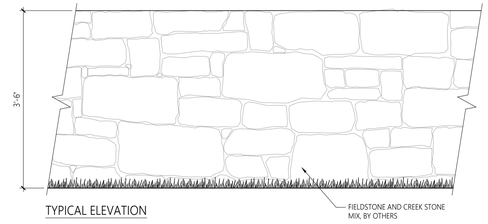

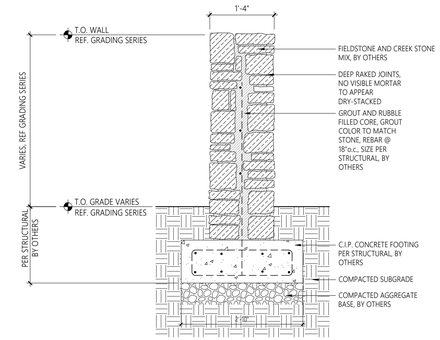

B STONE WALL: FREESTANDING

SCALE: 3/4" = 1'-0"

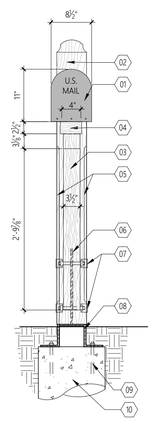

NOTE:
- CONTRACTOR TO PROVIDE SHOP DRAWINGS FOR REVIEW AND APPROVAL PRIOR TO FABRICATION.
- ALL WOOD MEMBERS TO BE CEDAR WITH SOLID BODY STAIN, PER INTERIOR DESIGNER
- MAILBOX MUST MEET ALL USPS REGULATIONS FOR MAILBOXES

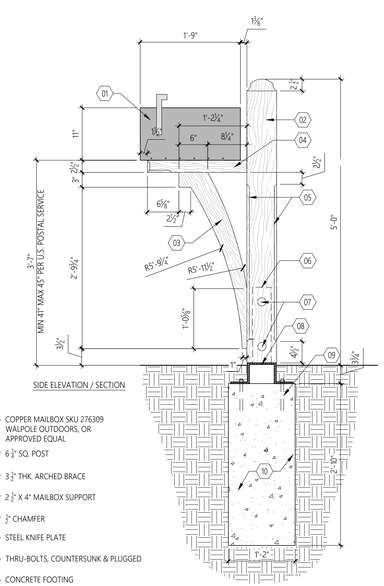

01 COPPER MAILBOX SKU 276309 WALPOLE OUTDOORS, OR APPROVED EQUAL
02 6 1/2" SQ. POST
03 3 1/2" THK. ARCHED BRACE
04 2 1/2" X 4" MAILBOX SUPPORT
05 1/2" CHAMFER
06 STEEL KNIFE PLATE
07 THRU-BOLTS, COUNTERSUNK & PLUGGED
08 CONCRETE FOOTING
09 ANCHOR BOLTS
10 CONCRETE FOOTING

J MAILBOX

SCALE: 1" = 1'-0"

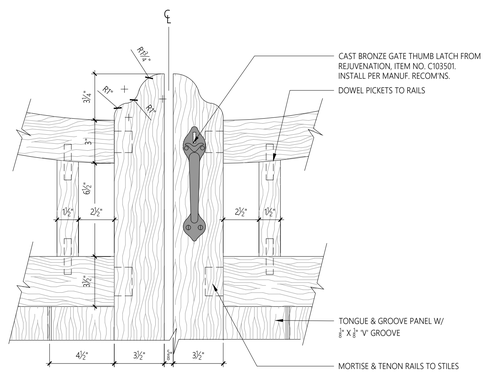

H WOOD GATE AT ENTRY TYPE A - HINGE STILE

SCALE: 3" = 1'-0"

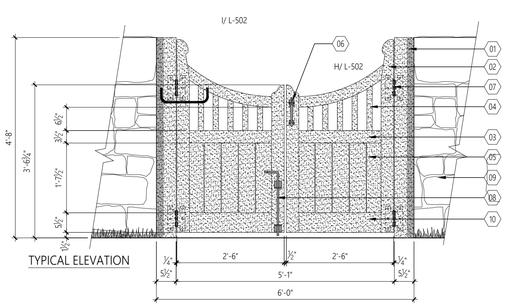

01 6" x 6" CEDAR POST
02 3" x 4" CEDAR STILES
03 3" x 4" CEDAR MID RAILING
04 1 1/2" X 1 1/2" PICKET
05 TONGUE & GROOVE PANEL W/ 1/8" X 1/8" 'V' GROOVE
06 CAST BRONZE GATE THUMB LATCH FROM REJUVENATION, ITEM NO. C103501. INSTALL PER MANUF. RECOM'NS.
07 BALL BEARING BUTT HINGE FROM WHITECHAPEL LTD., 4 1/2" X 4 1/2" ANTIQUED BRASS, MODEL 240MBH1A
08 CAST BRONZE CANE BOLT
09 STONE COLUMN AT ENTRY, REF DETAIL D/L-502
10 3" x 6" CEDAR BOTTOM RAILING

NOTE:
ALL WOOD SHALL BE WESTERN RED CEDAR. PALE GREEN STAIN. SUBMIT SAMPLES TO REVIEW W/ L. ARCH & INTERIORS.

G WOOD GATE AT ENTRY - TYPE A

SCALE: 3/4" = 1'-0"

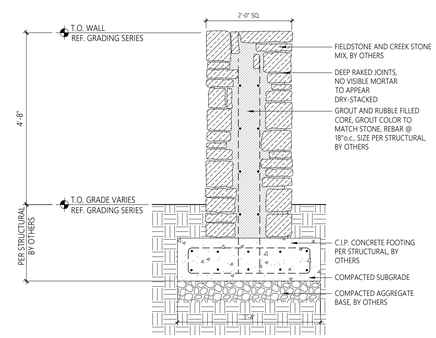

D STONE COLUMN AT ENTRY

SCALE: 3/4" = 1'-0"

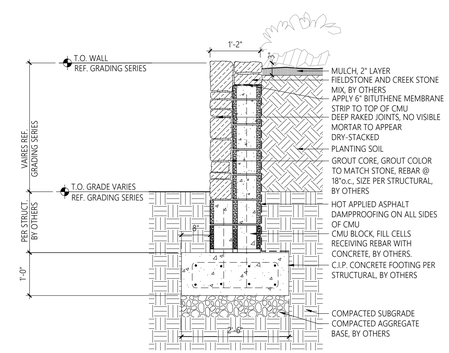

A STONE WALL: RETAINING

SCALE: 3/4" = 1'-0"

JAMES HYATT STUDIO
600 12th Street, Suite 100
Golden, Colorado 80401
T/ 720.539.7907 C/ 303.810.6113

CONSULTANTS

SIGNATURE & SEAL

KEYMAP

2900 TARRY TRAIL
AUSTIN TX 78703

SUBMITTALS

-	-

REVISIONS

NO.	COMMENTS	DATE
-	-	-

SHEET INFORMATION

DATE	MAY 15, 2023
JOB NUMBER	
DRAWN BY	JM
CHECKED BY	JH

SITE DETAILS

L-502

Copyright 2022 JAMESHYATT STUDIO

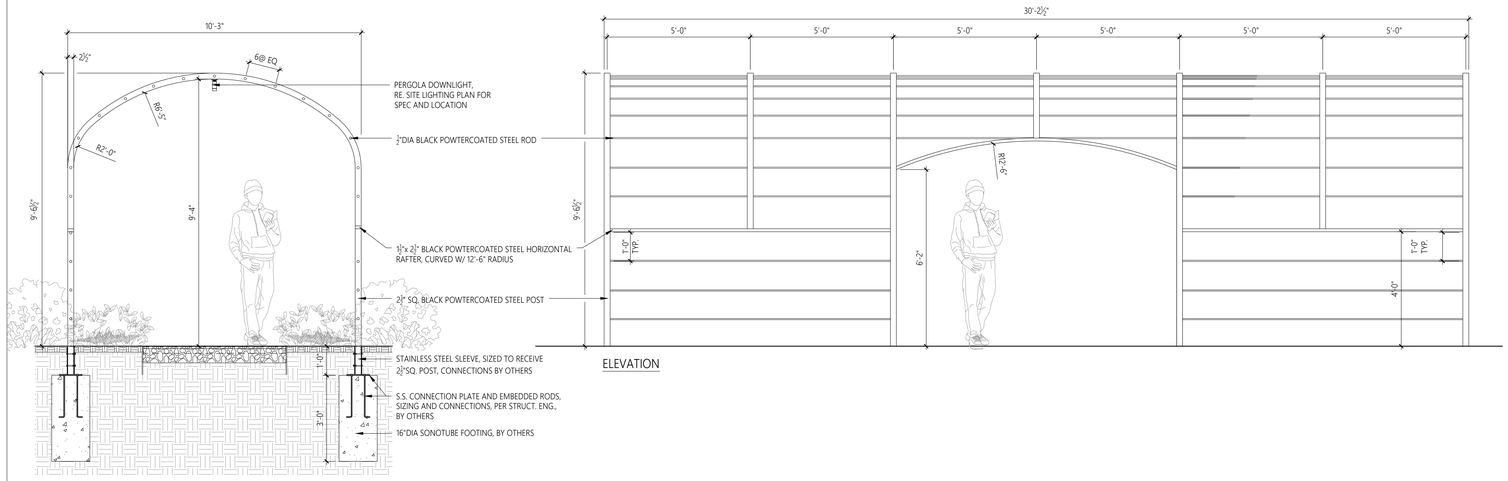

L GARDEN ARBOR

SCALE: 1/2" = 1'-0"

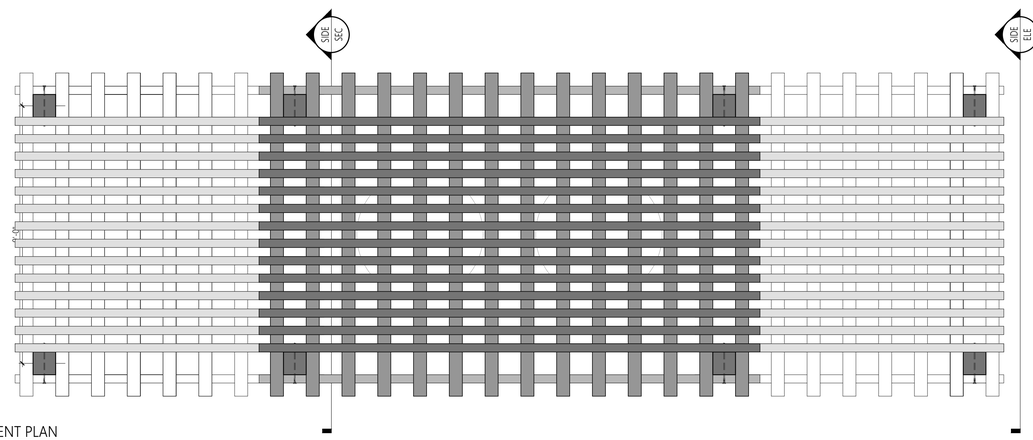

ENLARGEMENT PLAN

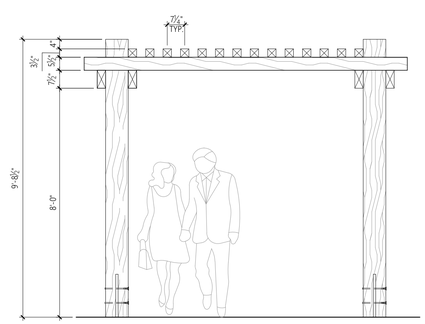

SIDE ELEVATION

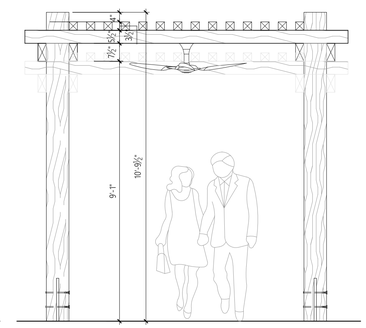

SIDE SECTION

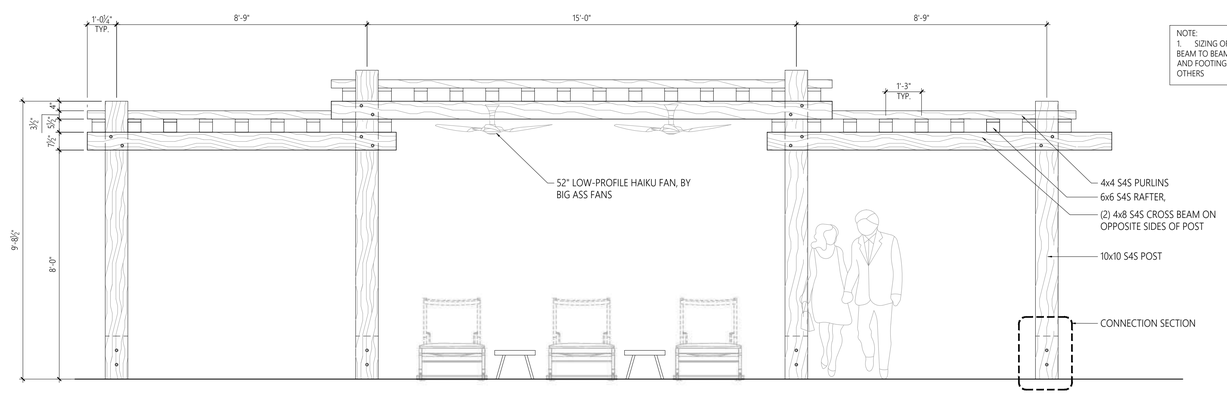

ELEVATION - FRONT & BACK

NOTE:
1. SIZING OF STRUCTURAL MEMBERS, BEAM TO BEAM, BEAM TO POST CONNECTIONS, AND FOOTING DESIGN PER STRUCT. ENG., BY OTHERS

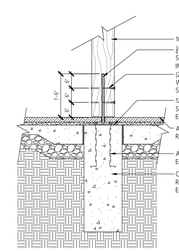

POST SECTION - NORTH/ SOUTH

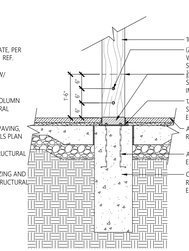

POST SECTION - NORTH/ SOUTH

J PERGOLA AT POOL

SCALE:1/2" = 1'-0"

JAMES HYATT STUDIO
600 12th Street, Suite 100
Golden, Colorado 80401
T/ 720.539.7907 C/ 303.810.6113

CONSULTANTS

SIGNATURE & SEAL

KEYMAP

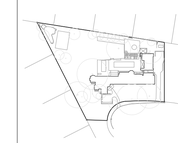

2900 TARRY TRAIL
AUSTIN TX 78703

SUBMITTALS

-	-

REVISIONS

NO.	COMMENTS	DATE
-	-	-

SHEET INFORMATION

DATE	MAY 15, 2023
JOB NUMBER	
DRAWN BY	JM
CHECKED BY	JH

SITE DETAILS

L-503

Copyright 2022 JAMESHYATT STUDIO

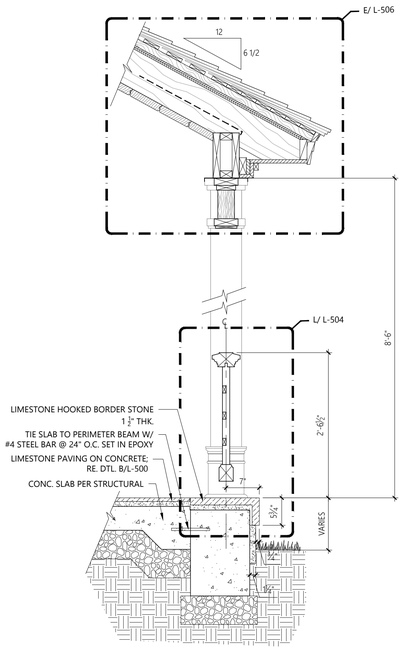

J SECTION @ SIDE RAIL

SCALE: 1" = 1'-0"

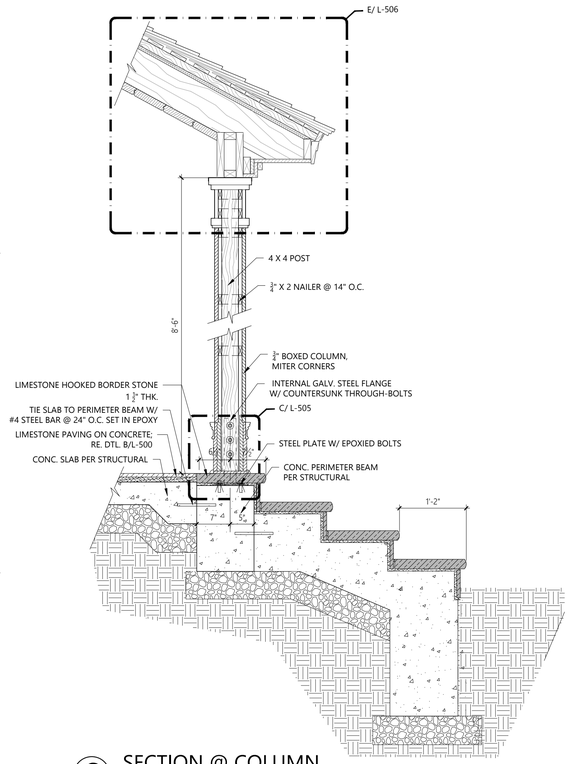

G SECTION @ COLUMN

SCALE: 1" = 1'-0"

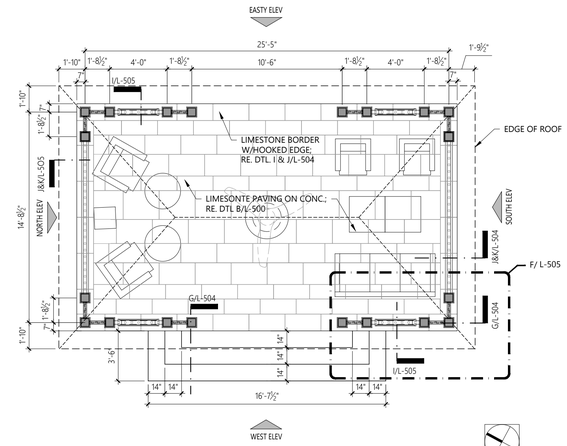

SIDE ELEVATION

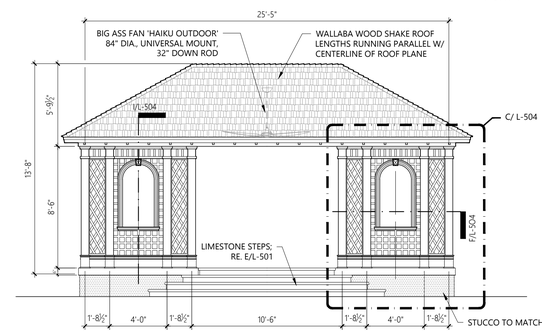

WEST ELEVATION
(EAST ELEV. SIM. W/O STEPS)

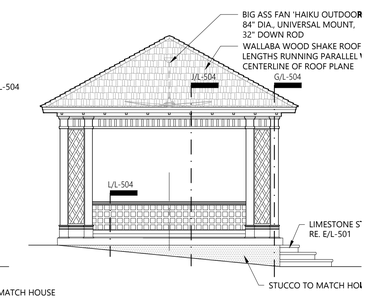

NORTH ELEVATION
(SOUTH ELEV. SIM.)

E GARDEN FOLLY

SCALE: 1/4" = 1'-0"

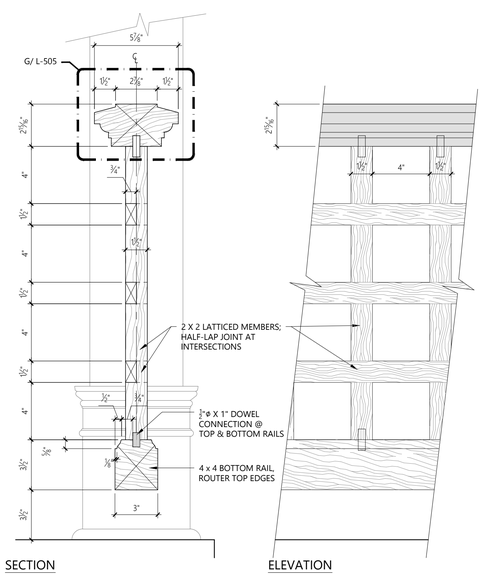

L SIDE RAIL - DETAIL

SCALE: 3" = 1'-0"

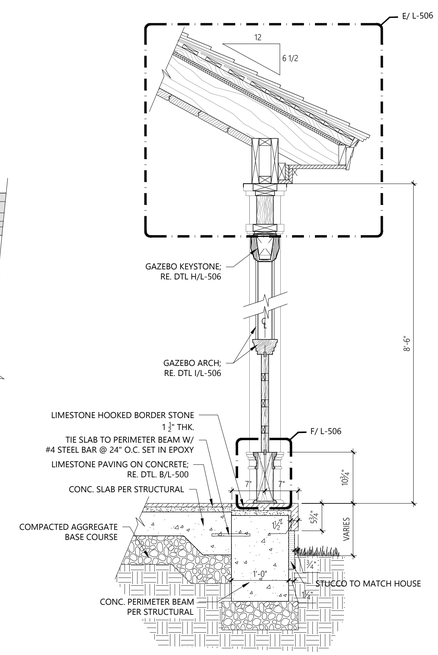

I SECTION @ ARCHED WINDOW

SCALE: 1" = 1'-0"

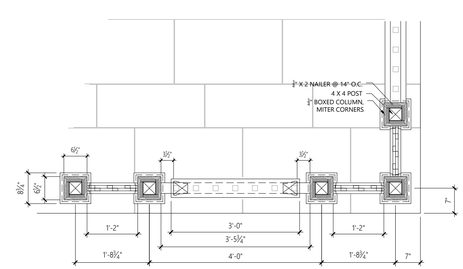

F PLAN ENLARGEMENT

SCALE: 3/4" = 1'-0"

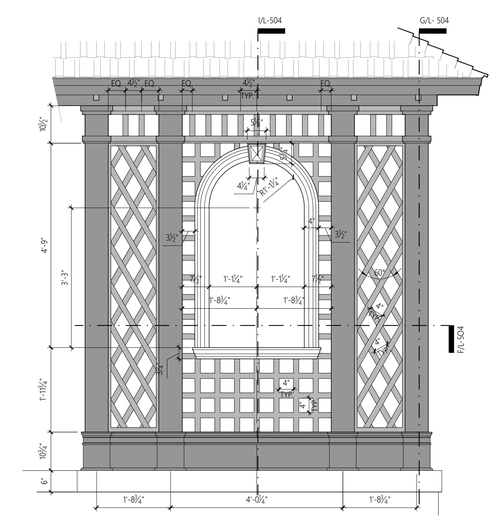

C PARTIAL ELEVATION ENLARGEMENT

SCALE: 3/4" = 1'-0"

JAMES HYATT STUDIO
600 12th Street, Suite 100
Golden, Colorado 80401
T/ 720.539.7907 C/ 303.810.6113

CONSULTANTS

SIGNATURE & SEAL

KEYMAP

2900 TARRY TRAIL
AUSTIN TX 78703

SUBMITTALS

REVISIONS

NO.	COMMENTS	DATE
-	-	-

SHEET INFORMATION

DATE	MAY 15, 2023
JOB NUMBER	
DRAWN BY	JM
CHECKED BY	JH

SITE DETAILS

L-504

Copyright 2022 JAMESHYATT STUDIO

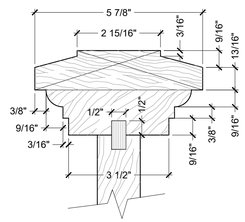

G RAIL PROFILE

SCALE: Half Scale

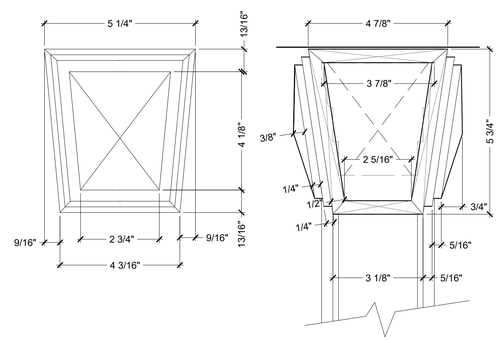

H GAZEBO KEYSTONE

SCALE: Half Scale

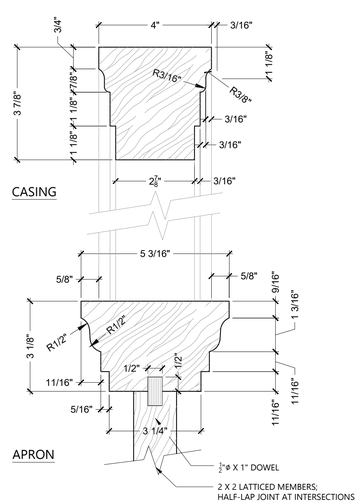

I GAZEBO ARCH - SECTION

SCALE: Half Scale

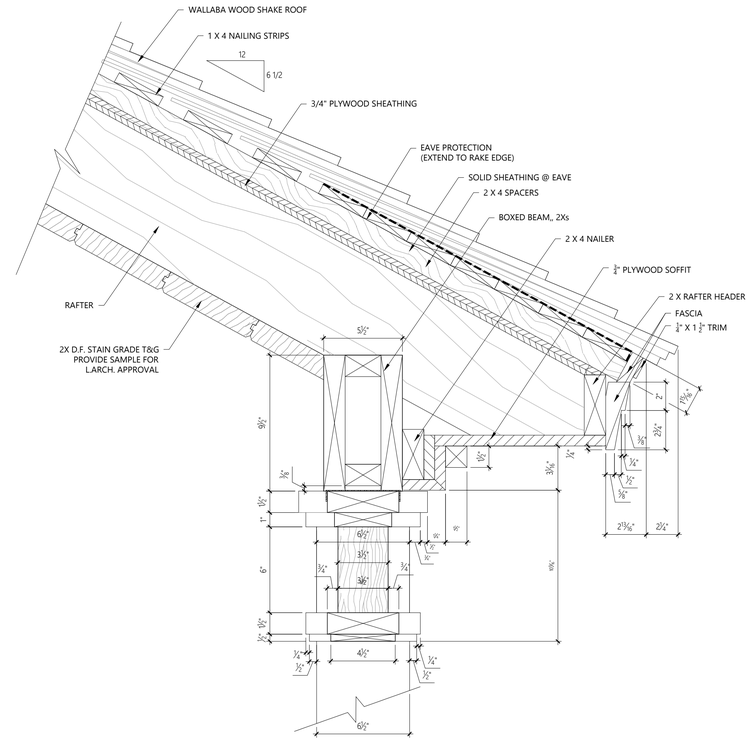

E ROOF DETAIL

SCALE: 3" = 1'-0"

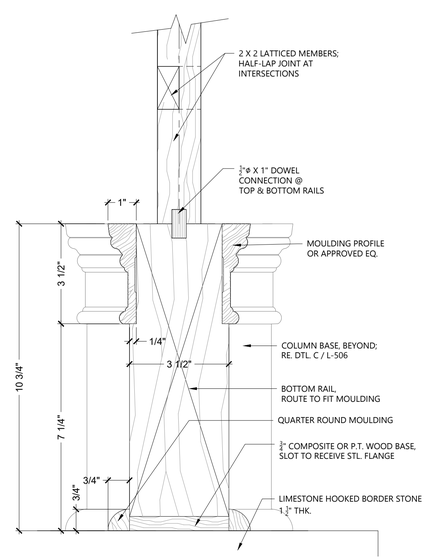

F GAZEBO BASE - SECTION

SCALE: Half Scale

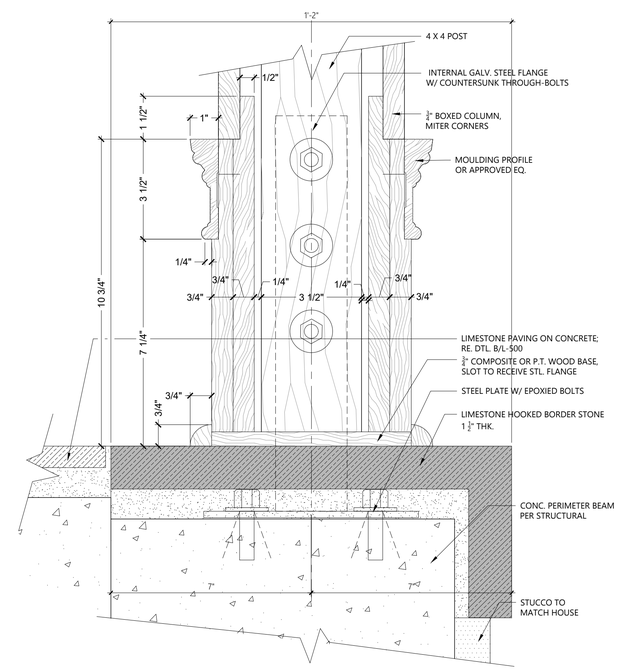

C GAZEBO COLUMN BASE - SECTION

SCALE: Half Scale

JAMES HYATT STUDIO

600 12th Street, Suite 100
Golden, Colorado 80401
T/ 720.539.7907 C/ 303.810.6113

CONSULTANTS

SIGNATURE & SEAL

KEYMAP

2900 TARRY TRAIL

AUSTIN TX 78703

SUBMITTALS

-	-

REVISIONS

NO.	COMMENTS	DATE
-	-	-

SHEET INFORMATION

DATE	MAY 15, 2023
JOB NUMBER	
DRAWN BY	JM
CHECKED BY	JH

SITE DETAILS

L-505

Copyright 2022 JAMESHYATT STUDIO

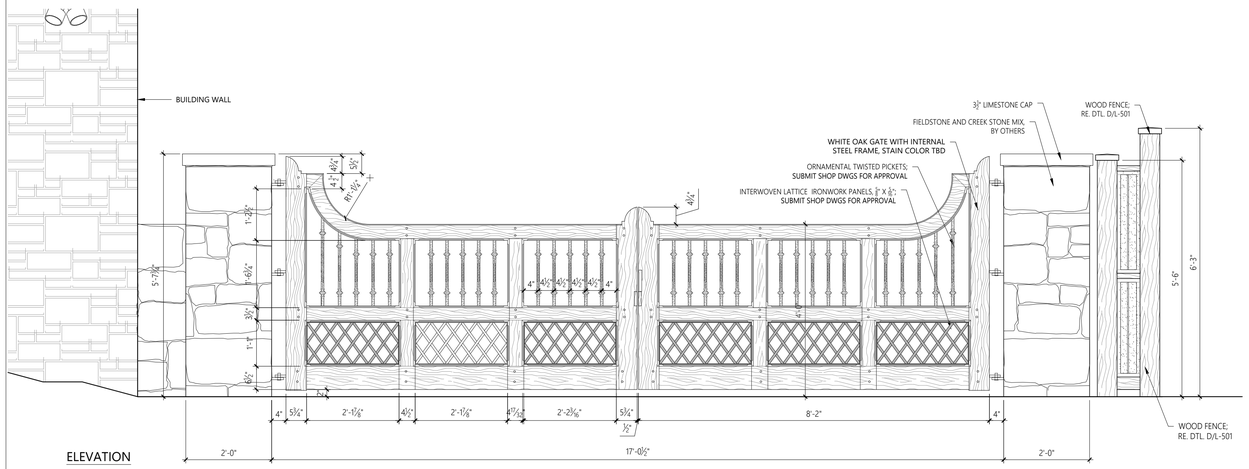

J WOOD GATE - VEHICULAR

SCALE: 3/4" = 1'-0"

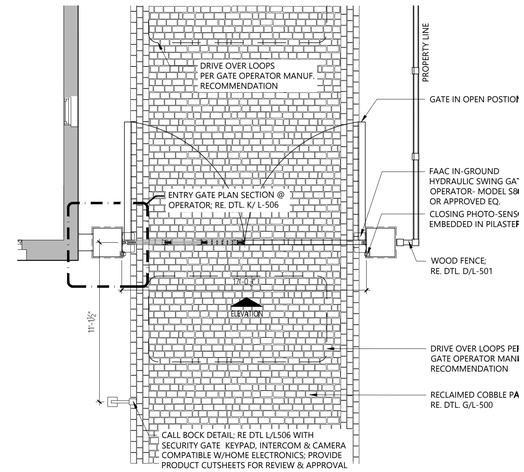

A HOLLY ST. MAIN ENTRANCE

SCALE: 1/4" = 1'-0"

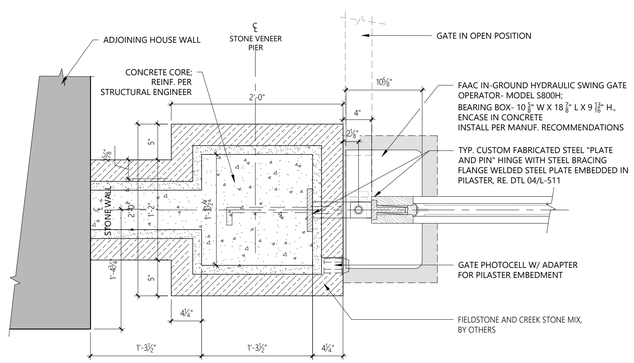

K GATE & PILASTER PLAN SECTION @ OPERATOR

SCALE: 1 1/2" = 1'-0"

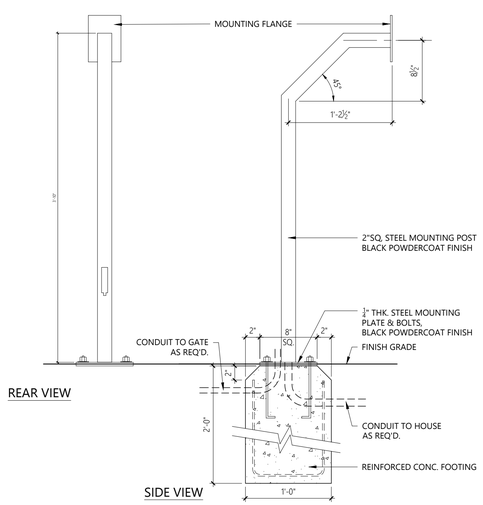

L CALL BOX DETAIL

SCALE: 1 1/2" = 1'-0"

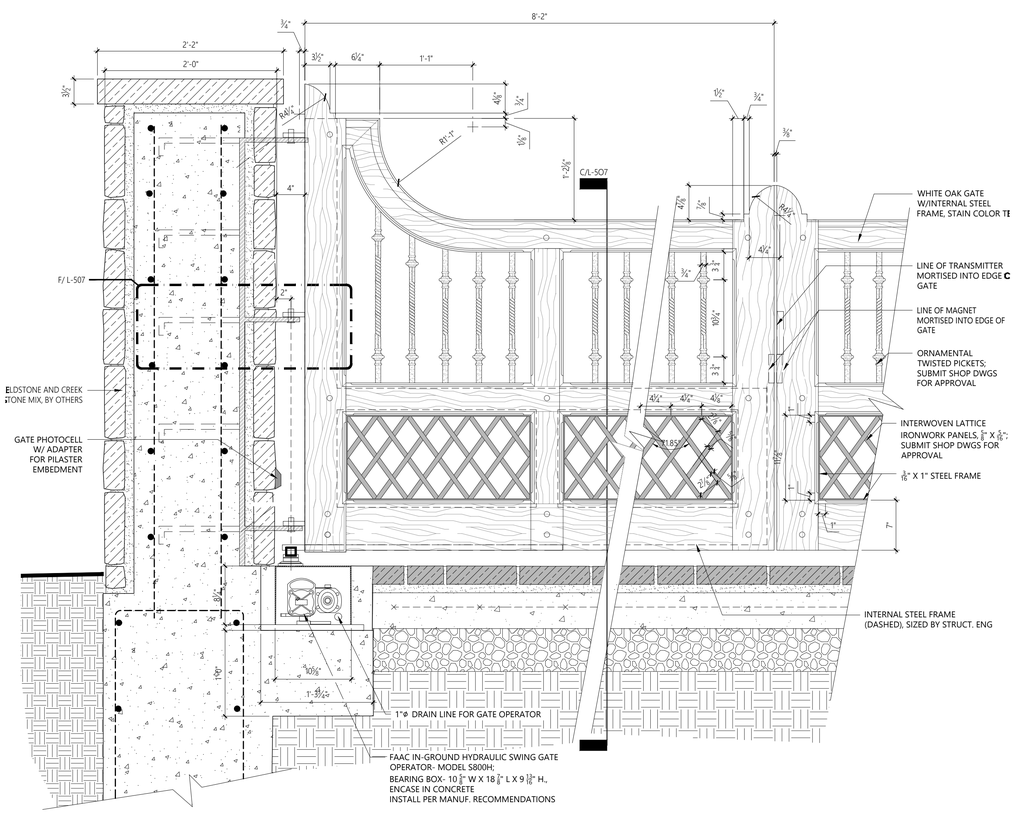

F ENTRY GATE-PARTIAL ELEVEVATION

SCALE: 1 1/2" = 1'-0"

JAMES HYATT STUDIO

600 12th Street, Suite 100
Golden, Colorado 80401
T/ 720.539.7907 C/ 303.810.6113

CONSULTANTS

SIGNATURE & SEAL

KEYMAP

2900 TARRY TRAIL

AUSTIN TX 78703

SUBMITTALS

-	-

REVISIONS

NO.	COMMENTS	DATE
-	-	-

SHEET INFORMATION

DATE	MAY 15, 2023
JOB NUMBER	
DRAWN BY	JM
CHECKED BY	JH

SITE DETAILS

L-506

Copyright 2022 JAMESHYATT STUDIO

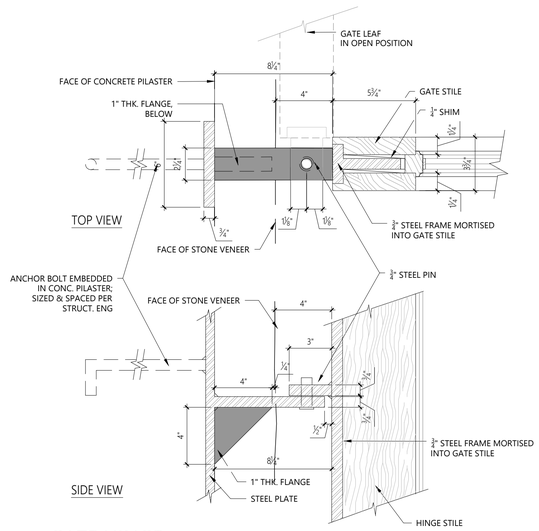

F GATE HINGE

SCALE: 3" = 1'-0"

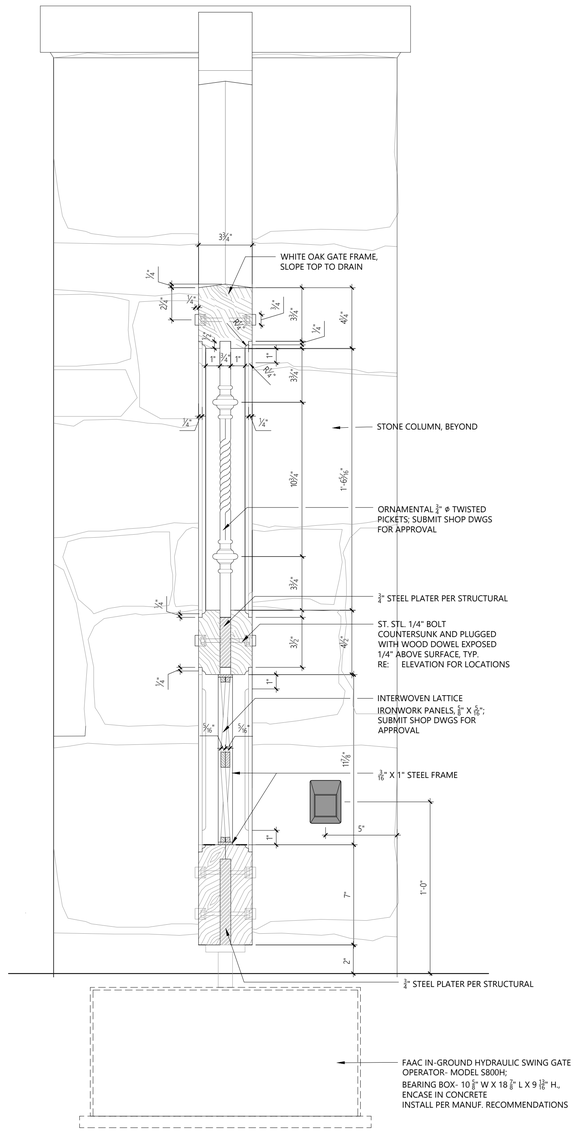

C GATE SECTION

SCALE: 3" = 1'-0"

JAMES
HYATT
STUDIO

600 12th Street, Suite 100
Golden, Colorado 80401
T/ 720.539.7907 · C/ 303.810.6113

CONSULTANTS

SIGNATURE & SEAL

KEYMAP

2900 TARRY TRAIL
AUSTIN TX 78703

SUBMITTALS

-	-

REVISIONS

NO.	COMMENTS	DATE
-	-	-

SHEET INFORMATION

DATE	MAY 15, 2023
JOB NUMBER	
DRAWN BY	JM
CHECKED BY	JH

SITE DETAILS

L-507

Copyright 2022 JAMESHYATT STUDIO

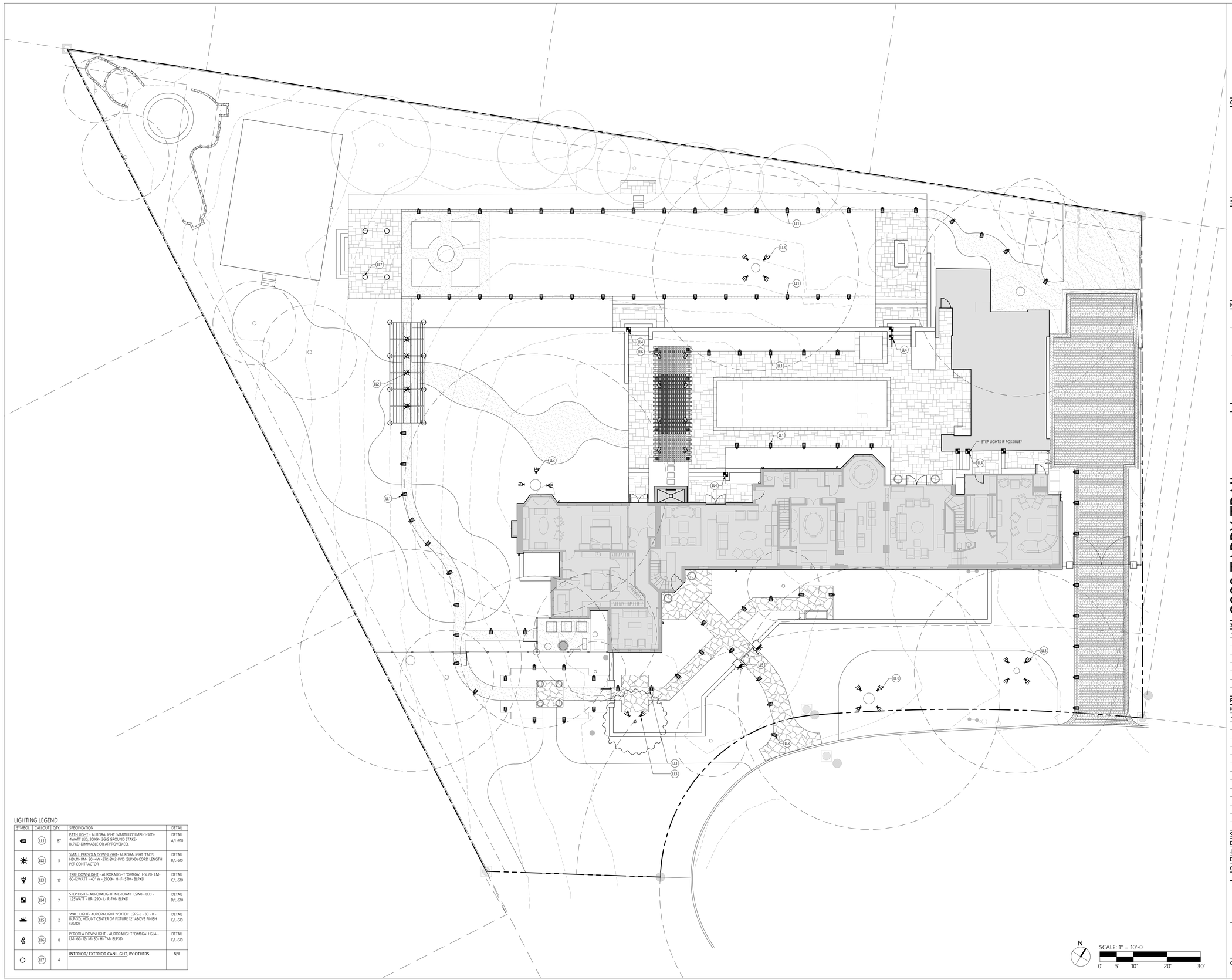

LIGHTING LEGEND

SYMBOL	CALLOUT	QTY.	SPECIFICATION	DETAIL
	LL1	87	PATH LIGHT - AURORALIGHT 'MARTILLO' LMPL-1-30D-4WATT LED, 3000K- 30/S GROUND STAKE- BLPXD-DIMMABLE OR APPROVED EQ.	DETAIL A/L-610
	LL2	5	SMALL PERGOLA DOWNLIGHT- AURORALIGHT 'TAOS' HDLTI- RM- 90- 4W -27K-SMZ-PVD (BLPXD) CORD LENGTH PER CONTRACTOR	DETAIL B/L-610
	LL3	17	TREE DOWNLIGHT - AURORALIGHT 'OMEGA' HSL20- LM- 60-12WATT - 40° W - 2700K- H- F- STM- BLPXD	DETAIL C/L-610
	LL4	7	STEP LIGHT- AURORALIGHT 'MERIDIAN' LSW8 - LED - 1.25WATT - BR- 290- L- R-PM- BLPXD	DETAIL D/L-610
	LL5	2	WALL LIGHT- AURORALIGHT 'VERTEX' LSRS-L - 30 - B - BLP-XD, MOUNT CENTER OF FIXTURE 12" ABOVE FINISH GRADE	DETAIL E/L-610
	LL6	8	PERGOLA DOWNLIGHT - AURORALIGHT 'OMEGA' HSLA - LM- 60- 12- M- 30- H- TM- BLPXD	DETAIL F/L-610
	LL7	4	INTERIOR/ EXTERIOR CAN LIGHT, BY OTHERS	N/A

JAMES HYATT STUDIO

600 12th Street, Suite 100
Golden, Colorado 80401
T/ 720.539.7907 . C/ 303.810.6113

CONSULTANTS

SIGNATURE & SEAL

KEYMAP

2900 TARRY TRAIL
AUSTIN TX 78703

SUBMITTALS

-	-

REVISIONS

NO.	COMMENTS	DATE
-	-	-

SHEET INFORMATION

DATE	MAY 15, 2023
JOB NUMBER	
DRAWN BY	JM
CHECKED BY	JH

SITE LIGHTING PLAN

L-601

Copyright 2022 JAMESHYATT STUDIO

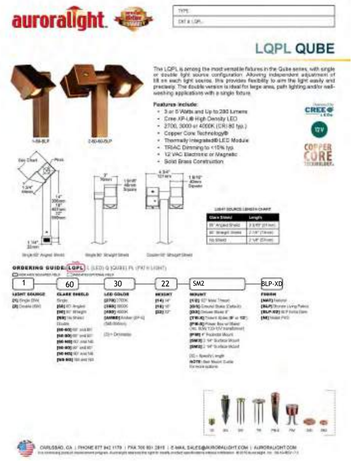

G BBQ TASK LIGHT (LL7)
SCALE: NTS.

F PERGOLA DOWNLIGHT (LL6)
SCALE: NTS.

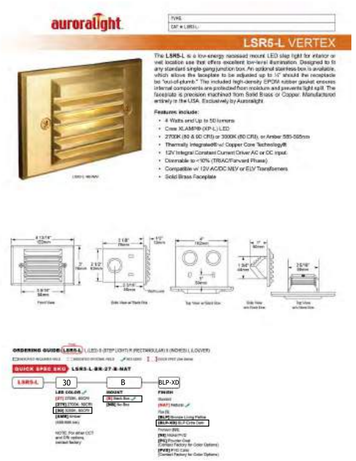

E WALL LIGHT (LL5)
SCALE: NTS.

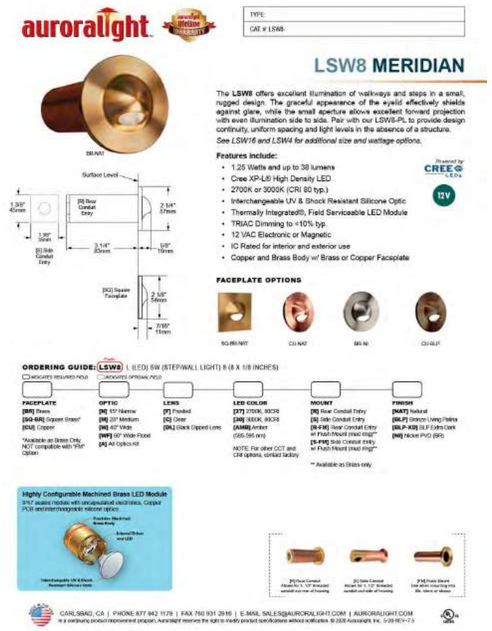

D WALL MOUNTED STEP LIGHT (LL4)
SCALE: NTS.

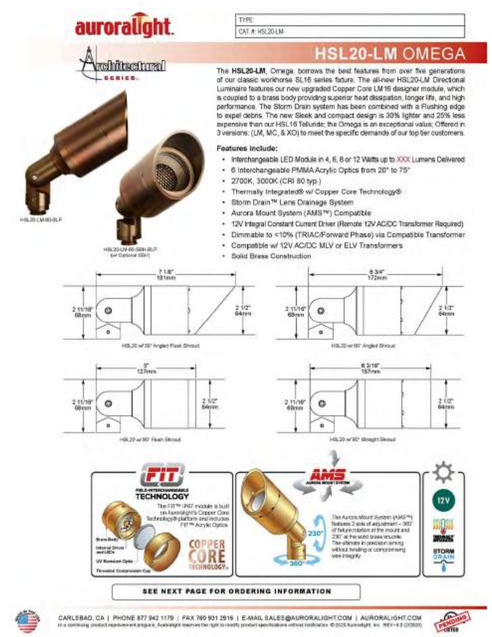

C TREE DOWNLIGHT (LL3)
SCALE: NTS.

B SMALL PERGOLA DOWNLIGHT (LL2)
SCALE: NTS.

A PATH LIGHT (LL1)
SCALE: NTS.

JAMES HYATT STUDIO
600 12th Street, Suite 100
Golden, Colorado 80401
T/ 720.339.7907 C/ 303.810.6113

CONSULTANTS

SIGNATURE & SEAL

KEYMAP

2900 TARRY TRAIL
AUSTIN TX 78703

SUBMITTALS

-	-

REVISIONS

NO.	COMMENTS	DATE
-	-	-

SHEET INFORMATION

DATE	MAY 15, 2023
JOB NUMBER	
DRAWN BY	JM
CHECKED BY	JH

SITE LIGHTING DETAILS

L-610

Copyright 2022 JAMESHYATT STUDIO

GENERAL NOTES

GENERAL

THESE GENERAL NOTES SHALL APPLY UNLESS SPECIFICALLY NOTED ON THE PLANS AND DETAILS. THE CONTRACTOR SHALL VERIFY ALL DIMENSIONS AND SHALL COORDINATE ALL STRUCTURAL PLANS AND DETAILS WITH THE ARCHITECTURAL DRAWINGS BEFORE STARTING WORK. THE ENGINEER SHALL BE NOTIFIED OF ANY DISCREPANCIES PRIOR TO CONSTRUCTION. DESIGN, CONSTRUCTION, WORKMANSHIP AND MATERIALS SHALL COMPLY WITH THE 2021 INTERNATIONAL RESIDENTIAL CODE.

THE STRUCTURAL SYSTEM OF THIS BUILDING IS DESIGNED TO PERFORM AS A COMPLETED UNIT. PRIOR TO COMPLETION OF THE STRUCTURE, STRUCTURAL COMPONENTS MAY BE UNSTABLE AND IT IS THE RESPONSIBILITY OF THE CONTRACTOR TO PROVIDE TEMPORARY SHORING AND/OR BRACING AS REQUIRED FOR THE STABILITY OF THE INCOMPLETE STRUCTURE AND FOR THE SAFETY OF ALL ON-SITE PERSONNEL.

DESIGN CRITERIA

1. BUILDING CODE: 2021 INTERNATIONAL RESIDENTIAL CODE

2. GRAVITY LOADS:

   A. DEAD LOADS
      1) ROOF 10 PSF
      2) FLOOR 20 PSF

   B. LIVE LOADS
      1) ROOF 20 PSF MIN.
      2) FLOOR 40 PSF

   C. SNOW LOADS
      1) GROUND SNOW LOAD, Pg 5 PSF
      2) IMPORTANCE FACTOR, I 1.0

3. LATERAL LOADS – CALCULATED IN ACCORDANCE WITH ASCE7-16

   A. WIND LOADS
      1) WIND SPEED 110 MPH
      2) IMPORTANCE FACTOR, I 1.0
      3) EXPOSURE "B"

   B. DESIGN WIND PRESSURE COMPONENTS AND CLADDING
      1) EXTERIOR WALLS

EFFECTIVE AREA (SQ. FT.)	ZONE 4 PSF	ZONE 5 PSF
10	21.8/-23.6	21.8/-27.2
20	20.8/-22.6	20.8/-24.6
50	19.5/-21.3	19.5/-22.6
100	18.5/-20.4	18.5/-18.1

      2) ROOFS

EFFECTIVE AREA (SQ.FT.)	ZONE 1 PSF	ZONE 2 PSF	ZONE 3 PSF
10	19.9/-21.8	19.9/-25.5	19.9/-25.5
20	19.4/-20.7	19.4/-24.3	19.4/-24.3
50	18.6/-19.2	18.6/-22.9	18.6/-22.9
100	18.1/-18.1	18.1/-21.8	18.1/-21.8

   C. DESIGN WIND PRESSURE MWFRSC
   CALCULATED IN ACCORDANCE WITH ASCE-16

FOUNDATION DESIGN IS BASED ON THE GEOTECHNICAL INVESTIGATION AND REPORT PREPARED BY MLA GEOTECHNICAL DATED AUG. 22, 2017.

FOUNDATION NOTES

1. FOR A DISTANCE OF 5'-0", SLOPE GRADE AWAY FROM THE BUILDING PERIMETER USING SOIL WITH A PLASTICITY INDEX OF 35 OR GREATER TO REDUCE MIGRATION OF MOISTURE INTO THE FOUNDATION. THE SOIL CAP MAY BE REPLACE WITH FLATWORK OR PAVEMENT.

2. ALL ENTITIES (SIDEWALKS, PORCHES, PATIOS, FLAT WORK, ETC.) SUPPORTED ON GRADE MUST BE COMPLETELY SEPARATED FROM THE STRUCTURAL FOUNDATION SYSTEM.

CONCRETE NOTES

1. ALL CONCRETE WORK SHALL CONFORM TO THE AMERICAN CONCRETE INSTITUTE (ACI) SPECIFICATION, ACI 301-05 AND THE BUILDING CODE REQUIREMENTS, ACI 318-08.

2. ALL DETAILING, FABRICATION AND ERECTION OF REINFORCING BARS, UNLESS OTHERWISE NOTED, MUST FOLLOW THE "ACI DETAILING MANUAL", PUBLICATION SP-66, LATEST EDITION, ACI 315, LATEST EDITION, AND ACI 315R, LATEST EDITION.

3. CONCRETE SHALL HAVE A MINIMUM COMPRESSIVE STRENGTH AT 28 DAYS AS FOLLOWS:

   ALL CONCRETE ..... 3,000 PSI
   MINIMUM CEMENT CONTENT ..... 4.5 SACKS/CY
   MAXIMUM WATER/CEMENT RATIO 0.55
   SLUMP RANGE ..... 2" MIN. – 5" MAX.

   TYPE C OR F FLY ASH CAN BE SUBSTITUTED FOR CEMENT 20% TO 25% BY WEIGHT. CALCIUM CHLORIDE IS NOT ACCEPTABLE FOR USE IN MIX. FURNISH MIX DESIGNS FOR ALL CLASSES OF CONCRETE. RETAIN A QUALIFIED TESTING LABORATORY TO MAKE CONCRETE CYLINDERS AND PERFORM COMPRESSIVE TESTS. A MINIMUM OF THREE CYLINDERS SHALL BE TAKEN PER 50 CUBIC YARDS OF CONCRETE, WITH ONE TEST AT 7 DAYS AND TWO AT 28 DAYS. COARSE AND FINE AGGREGATES SHALL COME FROM SOURCES LISTED ON THE "CONCRETE RATED SOURCE QUALITY CATALOG" BY THE TEXAS DEPARTMENT OF TRANSPORTATION AS NON REACTIVE SOURCES RECENT EDITION. SOURCES OF RIVER GRAVEL AND SAND SHALL HAVE NO MARCASITE OR IRON PYRITE PRESENT AT THE PRODUCTION FACILITY.

4. REINFORCING BARS SHALL BE NEW BILLET STEEL CONFORMING TO ASTM A615, GRADE 60.

5. STANDARD PROTECTIVE COVER OF REINFORCING BARS UNLESS OTHERWISE NOTED SHALL BE:

   SLABS ON GRADE (TOP) ..... 2 IN.
   GRADE BEAMS AND PIERS
      TOPS ..... 1 1/2 IN.
      SIDES ..... 3 IN.
      BOTTOMS ..... 3 IN.
      OTHER ..... 1 1/2 IN.

6. AT CORNERS AND "T" INTERSECTIONS OF ALL BEAMS EXTEND 4 CORNER BARS EQUAL TO THE SCHEDULED STEEL IN THE ADJACENT BEAMS 2'-0" EACH WAY, 2 BARS TOP AND 2 BARS BOTTOM. PROVIDE CORNER BARS AT ALL INTERMEDIATE REINFORCING BARS IN WALLS AND DEEP BEAMS.

7. ALL ACCESSORIES SHALL BE IN ACCORDANCE WITH THE "ACI DETAILING MANUAL", PUBLICATION SP-66, LATEST EDITION, ACI 315, LATEST EDITION, AND ACI 315R, LATEST EDITION. PROVIDE CONCRETE BRICK CHAIRS AT ALL BEAMS AND SLABS TO SUPPORT REINFORCING STEEL AT A SPACING NOT TO EXCEED 4'-0" O.C. IN ANY DIRECTION.

8. VERTICAL JOINTS IN FLOOR SLABS ARE TO BE SHOWN ON PLANS. NO HORIZONTAL JOINTS WILL BE PERMITTED IN SLABS OR BEAMS UNLESS NOTED OTHERWISE.

9. LAP LENGTHS FOR BARS SCHEDULED AND DETAILED "CONT." SHALL BE:

   FOR 3000 PSI CONCRETE
   #3 BARS – 22 INCHES #7 BARS – 63 INCHES
   #4 BARS – 29 INCHES #8 BARS – 72 INCHES
   #5 BARS – 36 INCHES #9 BARS – 81 INCHES
   #6 BARS – 43 INCHES

   LAP LENGTH FOR WELDED WIRE REINFORCEMENT SHALL BE EQUAL TO A DISTANCE OF TWO TIMES THE MESH SIZE OPENING.

10. CONCRETE PLACED BY PUMPING SHALL MEET THE FOLLOWING REQUIREMENTS:

A) COARSE AGGREGATE SHALL BE GRADED FROM A MAXIMUM OF 1" DOWN.

B) MAXIMUM ALLOWABLE INCREASE IN CEMENT FACTOR SHALL BE 1/2 SACK PER CUBIC YARD OVER NORMAL MIX DESIGN.

C) MAXIMUM WATER CEMENT RATIO SHALL CONFORM TO NOTE 3 OF THIS SECTION. IF MORE WORKABILITY IS REQUIRED, AN ADMIXTURE MAY BE USED.

D) MAXIMUM WEIGHT RATIO OF FINE AGGREGATES TO COARSE AGGREGATES SHALL NOT EXCEED 2/3.

E) REFER TO ACI 301-05, SECTION 800, FOR OTHER PUMPING REQUIREMENTS.

11. WELDING OR HEAT BENDING OF REINFORCING BARS SHALL NOT BE PERMITTED, UNLESS APPROVED BY THE ENGINEER.

12. DURING PLACEMENT OF CONCRETE, USE A TREMIE OR OTHER MEANS TO LIMIT FREE FALL OF CONCRETE TO 5'-0".

13. EXTEND ALL GRADE BEAMS A MINIMUM OF 1'-0" BELOW EXISTING GRADE.

14. DURING PLACEMENT OF CONCRETE, USE A TREMIE OR OTHER MEANS TO LIMIT FREE FALL OF CONCRETE TO 5'-0".

15. CONCRETE SHALL BE CONTINUOUSLY CURED FOR A PERIOD OF 7 DAYS FOLLOWING PLACEMENT BY ANY OF THE FOLLOWING METHODS:

A) FOGGING WITH WATER
B) APPLYING AN APPROVED SPRAY ON CONCRETE CURING COMPOUND
C) COVERING WITH A POLY MEMBRANE

16. PROVIDE STEGO WRAP 15 MIL. VAPOR BARRIER OR APPROVED EQUAL UNDER ALL CONCRETE SLABS AND GRADE BEAMS. VAPOR BARRIER SHALL CONFORM TO ASTM E 1745 CLASS A REQUIREMENTS. INSTALLATION SHALL BE IN ACCORDANCE WITH MANUFACTURER'S INSTRUCTIONS AND ASTM E 1643-98. DO NOT TEAR OR PUNCTURE VAPOR BARRIER. PROVIDE CRETE CLAW TAPE AND INSTALL PER MANUFACTURERS INSTRUCTIONS.

17. SHOP DRAWINGS SHALL BE PREPARED FOR ALL REINFORCING STEEL AND SUBMITTED FOR REVIEW BY THE ENGINEER. ENGINEER'S REVIEW WILL COVER BAR SIZES, AND GENERAL AGREEMENTS BUT NOT DIMENSIONS OR QUANTITIES. ENGINEERING DRAWINGS SHALL NOT BE REPRODUCED AND USED AS SHOP DRAWINGS. ANY REPRODUCED DRAWINGS WILL BE REJECTED AND RESUBMITTAL WILL BE REQUIRED.

18. HOT WEATHER CONCRETE:

   THE TEMPERATURE OF CONCRETE AS PLACED SHALL NOT EXCEED 90°F UNLESS OTHERWISE SPECIFIED OR PERMITTED. LOSS OF SLUMP, FLASH SET, OR COLD JOINTS DUE TO TEMPERATURE OF CONCRETE AS PLACED WILL NOT BE ACCEPTABLE. WHEN TEMPERATURE OF CONCRETE EXCEEDS 90°F, OBTAIN ACCEPTANCE, WHEN REQUIRED, OF PROPOSED PRECAUTIONARY MEASURES. WHEN TEMPERATURE OF STEEL REINFORCEMENT IS GREATER THAN 120°F, FOG STEEL REINFORCEMENT, EMBEDMENTS, SUBGRADE AND FORMS WITH WATER IMMEDIATELY BEFORE PLACING CONCRETE. REMOVE STANDING WATER BEFORE PLACING CONCRETE. REDUCE TIME BETWEEN PLACING AND START OF CURING BY AVOIDING DELAYS DURING CONSTRUCTION. IN THE EVENT OF ANY DELAY DURING CONSTRUCTION PROTECT CONCRETE WITH TEMPORARY COVERINGS, SUCH AS POLYETHYLENE SHEETING OR SPRAY APPLY AN EVAPORATION RETARDER IMMEDIATELY AFTER FINISHING TO MINIMIZE EVAPORATION. APPLY A SUITABLE CURING MATERIAL SUCH AS A CURING COMPOUND, WET BURLAP, OR CURING PAPER.

19. PIPES AND/OR CONDUITS GREATER THAN 1" IN OUTSIDE DIAMETER MUST BE LOCATED BENEATH THE VAPOR BARRIER, BURIED WITHIN THE FILL MATERIAL.

20. PIPE OR CONDUIT LOCATED WITHIN THE GRADE BEAM AND RUNNING PARALLEL TO THE LENGTH OF THE GRADE BEAM IS LIMITED TO ONE 2" MAX. DIAMETER PIPE OR CONDUIT AND SHALL BE LOCATED AT MID-DEPTH OF THE GRADE BEAM. THE PIPE OR CONDUIT MUST CLEAR THE REINFORCING STEEL BY 2" MIN.

21. WHERE PIPES EXTEND VERTICALLY THROUGH GRADE BEAM, WIDEN GRADE BEAM BY A DISTANCE GREATER THAN OR EQUAL TO THE DIAMETER OF THE PIPE. PLACE HALF OF THE HORIZONTAL BEAM REINFORCING AT EACH SIDE OF THE PIPE. THE PIPE OF CONDUIT MUST CLEAR THE REINFORCING STEEL BY 2" MIN.

TIMBER NOTES

1.0 UNLESS OTHERWISE NOTED, ALL STRUCTURAL FRAMING LUMBER SHALL BE CLEARLY MARKED NO. 2 K.D. PINE BY THE SOUTHERN PINE INSPECTION BUREAU (SPIB) WITH A MINIMUM Fb = 1050 PSI IN ACCORDANCE WITH THE NATIONAL DESIGN SPECIFICATION FOR WOOD CONSTRUCTION (NDS). ALL WALL STUDS SHALL BE S-P-F LUMBER, NO. 2 OR BETTER. ALL STUDS SHALL BE CONTINUOUS – NO FINGER JOINTED STUDS WILL BE PERMITTED.

1.1 ALL EXPOSED FIR RAFTERS, BEAMS AND RAFTER TAILS SHALL BE CERTIFIED DOUGLAS FIR LARCH NORTH NO. 1 BY THE NATIONAL LUMBER GRADES AUTHORITY (NLGA) WITH A MINIMUM Fb = 1300 PSI IN ACCORDANCE WITH THE NDS.

2. SOLID 2" BLOCKING SHALL BE PROVIDED AT THE ENDS AND POINTS OF SUPPORT OF ALL WOOD JOISTS, RAFTERS, AND PURLINS, AND SHALL BE PLACED BETWEEN SUPPORTS IN ROWS NOT EXCEEDING 8'-0" O.C. MAX. VERTICALLY. END NAIL WITH 2-16d NAILS OR SIDE TOE NAIL WITH 2-16d NAILS. ALL BLOCKING SHALL BE SAME DEPTH AS MEMBERS BEING BLOCKED.

3. ALL CONNECTIONS FOR WOOD FRAMING MEMBERS SHALL BE IN ACCORDANCE WITH THE INTERNATIONAL BUILDING CODE FASTENING SCHEDULE (TABLE 2304.9.1).

4. ALL WOOD STUD WALLS SHALL BE FULL HEIGHT WITHOUT INTERMEDIATE PLATE LINE UNLESS DETAILED OTHERWISE.

5. DECKING:

   PLYWOOD DECKING – 1 1/8" FOR FLOORS, 23/32" FOR ROOFS, 15/32" FOR EXTERIOR SHEATHING, GRADE C-D, WITH EXTERIOR GLUE, USE 10d COMMON NAILS AT 6" O.C. AT ALL SUPPORTED EDGES, 10d AT 12" O.C. AT ALL INTERMEDIATE SUPPORTS. ALL JOINTS IN PLYWOOD DECKING SHALL BE STAGGERED. PROVIDE SOLID 2" BLOCKING AT ALL JOINTS IN PLYWOOD SHEAR WALLS. INSTALL PANELS WITH LONG DIMENSION PERPENDICULAR TO SUPPORTING MEMBER SPAN.

   1 3/4" 16 GAGE STAPLES CAN BE USED IN LIEU OF NAILS FOR EXTERIOR SHEATHING. SPACE STAPLES AT 4" O.C. AT ALL SUPPORTED EDGES AND 8" O.C. AT ALL INTERMEDIATE SUPPORTS.

   ORIENTED STRAND BOARD CAN BE USED IN LIEU OF PLYWOOD WITH THE OWNER'S AND ARCHITECT'S APPROVAL.

   GLUE AND NAIL ALL FLOOR DECKING TO WOOD FLOOR FRAMING MEMBERS.

6. ALL MEMBERS FRAMING INTO THE SIDE OF A HEADER, STEEL BEAM, HIP, VALLEY, RIDGE, TRUSS, GLUED-LAMINATED BEAM, OR ANY OTHER BEAMS SHALL BE ATTACHED USING METAL JOIST HANGERS (SIMPSON OR EQUAL).

7. INCLUDE AN ALLOWANCE FOR 200 BOARD FEET OF LUMBER TO BE USED AS DIRECTED IN THE FIELD FOR SPECIAL CONDITIONS NOT COVERED BY NOTE OR DRAWING (LABOR FOR ERECTING SAME TO BE INCLUDED). UPON COMPLETION OF PROJECT REBATE TO OWNER ANY AMOUNT REMAINING.

8. PROVIDE TRIPLE STUDS (OR CRIPPLES) AT EACH END OF ANY HEADER, BEAM, RIDGE, VALLEY, OR HIP SPANNING OVER 10'-0" UNLESS NOTED OTHERWISE. PROVIDE DOUBLE STUDS (OR CRIPPLES) AT EACH END OF ANY HEADER, BEAM, RIDGE, VALLEY, OR HIP SPANNING 5'-0" TO 10'-0" UNLESS NOTED OTHERWISE.

9. IN EXTERIOR WALLS, PROVIDE DOUBLE FULL-HEIGHT STUDS AT BOTH ENDS OF FRAMED OPENINGS THAT ARE 4'-0" OR LARGER. PROVIDE TRIPLE FULL-HEIGHT STUDS IN OPENINGS THAT ARE 6'-0" OR LARGER. AT WINDOW OPENINGS, THE SILL PLATE SHOULD BE BUILT-UP TO MATCH THE STUDS AT BOTH ENDS OF THE OPENING.

10. THE NEW GENERATION OF PRESSURE TREATED LUMBER PRODUCTS ARE HIGHLY CORROSIVE TO METAL CONNECTORS AND FASTENERS. ALL FASTENERS AND METAL CONNECTORS USED IN CONJUNCTION WITH THE NEW GENERATION OF PRESSURE TREATED LUMBER SHALL BE HOT-DIPPED GALVANIZED (MIN. G185 COATING) OR TYPE 304 OR 316 STAINLESS STEEL. THESE LOCATIONS INCLUDE, BUT ARE NOT LIMITED TO THE FOLLOWING:

   – ANCHOR BOLTS AT SOLE PLATE TO FOUNDATION
   – MUD SILL ANCHORS AT SOLE PLATE TO FOUNDATION
   – NAILS FROM SOLE PLATE TO WALL STUDS
   – NAILS AT EXTERIOR PLYWOOD SHEATHING TO SOLE PLATE
   – BOLTS AT LEDGER TO CONCRETE
   – JOIST TO TREATED LEDGER CONNECTIONS
   – ALL HANGERS ON TREATED JOISTS
   – PLYWOOD DECKING TO TREATED JOISTS
   – WOOD POSTS TO CONCRETE
   – NAILS AT FLOOR JOISTS AND RIM JOISTS TO SOLE PLATE
   – DECK BOARDS TO TREATED JOISTS

11. IF PREFABRICATED TRUSSES ARE USED IN LIEU OF THE FRAMING SYSTEM SHOWN IN THESE DRAWINGS, THE CONTRACTOR SHALL PROVIDE SHOP DRAWINGS INCLUDING TRUSS LAYOUTS AND TRUSS DESIGN CALCULATIONS WITH SEAL OF REGISTERED ENGINEER IN STATE OF TEXAS FOR REVIEW. SHOP DRAWINGS SHALL ALSO INCLUDE SIZE AND LOCATION OF ALL REQUIRED BRACING MEMBERS (TEMPORARY AND PERMANENT) AND DETAILS OF ALL TRUSS TO TRUSS CONNECTIONS (EXAMPLE: HIP JACK TRUSS TO GIRDER TRUSS AND COMMON JACK TRUSSES TO GIRDER TRUSS). A REVIEW OF THE MODIFIED LOADING CONDITIONS ON THE FRAMING SYSTEM WILL BE REQUIRED. THIS REVIEW WILL BE CONSIDERED ADDITIONAL SERVICES AND WILL BE BILLED TO THE OWNER ON AN HOURLY BASIS.

LAMINATED VENEER LUMBER (LVL)

1. ALL LVL'S SHALL BE FABRICATED TO STANDARDS SET FORTH IN THE INTERNATIONAL CODE COUNCIL EVALUATION SERVICE (ICC-ES) REPORT NO. ESR-1387 AND SHALL PROVIDE MINIMUM ALLOWABLE DESIGN VALUES OF 2600 PSI IN BENDING, 285 PSI IN HORIZONTAL SHEAR PERPENDICULAR TO THE GLUE LINE AND 1,900,000 PSI IN MODULUS OF ELASTICITY.

STRUCTURAL STEEL NOTES

1.0 ALL STRUCTURAL STEEL WIDE FLANGE BEAMS SHALL CONFORM TO THE ASTM SPECIFICATION A992 (Fy = 50 KSI) UNLESS OTHERWISE SHOWN OR NOTED.

1.1. ALL STRUCTURAL STEEL TUBES SHALL CONFORM TO ASTM SPECIFICATION A500 GRADE B (Fy = 46 KSI).

1.2 ALL STRUCTURAL STEEL PIPES SHALL CONFORM TO ASTM A53 GRADE B (Fy = 35 KSI).

1.3 ALL STRUCTURAL STEEL PLATES AND ANGLES SHALL CONFORM TO ASTM A36 (Fy = 36 KSI).

2. ALL STRUCTURAL STEEL SHALL BE DESIGNED, FABRICATED AND ERECTED IN ACCORDANCE WITH THE LATEST SPECIFICATIONS OF THE AMERICAN INSTITUTE OF STEEL CONSTRUCTION (AISC).

3. ALL STRUCTURAL BOLTS SHALL CONFORM TO ASTM A325 UNLESS OTHERWISE SHOWN OR NOTED. FURNISH HARDENED WASHERS AT ALL BOLTED CONNECTIONS, INCLUDING ANCHOR BOLTS.

4. REFER TO ARCHITECTURAL AND MECHANICAL PLANS FOR VERIFICATION OF ALL BOLTS, BLOCKING ANCHORS, ETC., FOR THE ANCHORAGE OF THEIR RESPECTIVE ITEMS.

5. ALL BEAMS AND COLUMNS SHALL BE FULL LENGTH WITHOUT SPLICES UNLESS OTHERWISE INDICATED ON PLANS.

6. ALL SHOP AND FIELD WELDS SHALL BE MADE BY WELDERS WHO HAVE BEEN QUALIFIED AND CERTIFIED TO MAKE THE REQUIRED WELDS IN ACCORDANCE WITH THE LATEST AMERICAN WELDING SOCIETY (AWS) STANDARD AWS D1.1. ELECTRODES WHICH PRODUCE A MINIMUM 70 KSI TENSILE STRENGTH WELD SHALL BE USED.

7. ERECTION CONNECTORS SHALL BE PROVIDED IN ORDER TO PROPERLY ALIGN STRUCTURAL STEEL MEMBERS SO THAT THEY ARE TRUE AND PLUMB WHEN WELDS ARE MADE.

8. SHOP DRAWINGS SHALL BE PREPARED FOR ALL STRUCTURAL STEEL AND SUBMITTED FOR REVIEW BY THE ENGINEER. ENGINEER'S REVIEW WILL COVER MEMBER SIZES, STRENGTH OF CONNECTIONS AND GENERAL ARRANGEMENTS BUT NOT DIMENSIONS OR QUANTITIES. ENGINEERING DRAWINGS SHALL NOT BE REPRODUCED AND USED AS SHOP DRAWINGS. ANY REPRODUCED DRAWINGS WILL BE REJECTED AND RESUBMITTAL WILL BE REQUIRED.

PIER NOTES

1. PIERS ARE SIZED FOR AN ALLOWABLE BEARING CAPACITY OF 4,000 PSF AND AN ALLOWABLE SKIN FRICTION CAPACITY OF 2,000 PSF BEGINNING AT A DEPTH OF 12 FEET BELOW THE CURRENT GROUND SURFACE.

2. EACH PIER SHAFT SHALL BE INSPECTED BY QUALIFIED GEOTECHNICAL PERSONNEL TO VERIFY BEARING SEATING DEPTH AND TO DOCUMENT THE DRILLING CONDITIONS ENCOUNTERED, THE CLEANING OF THE BOTTOM OF THE SHAFT, THE DEPTH AND DIAMETER OF THE PIER, AND THE SIZE, NUMBER, CONFIGURATION AND GRADE OF REINFORCING STEEL PLACEMENT.

3. ALL PIERS SHALL BE CENTERED ON BEAMS UNLESS OTHERWISE SHOWN.

4. DRILL PIERS TO THE EXACT SIZE SHOWN. SHAFTS SHALL BE DRILLED PLUMB WITH A TOLERANCE OF 2". FOOTING BOTTOMS SHALL BE THOROUGHLY CLEAN AND FREE OF WATER WHEN CONCRETE IS PLACED.

5. FOR ESTIMATING PURPOSES, CARRY ALL FOOTINGS TO THE DEPTHS INDICATED ON THE DRAWINGS. WHEN DIRECTED BY THE ARCHITECT/ENGINEER, CARRY FOOTINGS TO GREATER OR LESSER DEPTHS TO PROVIDE SUITABLE BEARING. ADJUSTMENTS WILL BE MADE IN THE CONTRACT PRICE FOR MORE OR LESS DEPTH IN ACCORDANCE WITH THE UNIT PRICES QUOTED IN THE CONTRACTOR'S BID.

6. PROVIDE SUITABLE ACCESS AND LIGHTING FOR INSPECTION OF THE EXCAVATIONS FOR CLEANLINESS AND FOR CORRECTNESS OF DIMENSIONS AND ALIGNMENT.

7. PLACEMENT OF CONCRETE SHALL BE ACCOMPLISHED AS SOON AS POSSIBLE AFTER DRILLING AND INSPECTION. NO PIER EXCAVATION SHALL BE LEFT OPEN OVERNIGHT WITHOUT CONCRETING.

8. CASINGS MAY BE REQUIRED TO PREVENT CAVING OF THE SOIL AND THE SEEPAGE OF WATER INTO THE DRILLED FOOTINGS. CASINGS SHALL BE METAL OF AMPLE STRENGTH TO WITHSTAND HANDLING STRESSES AND CONCRETE AND EARTH PRESSURES, AND SHALL BE WATERTIGHT. CONTRACTOR'S BID SHALL FURNISH UNIT PRICES FOR CASING OF DIFFERENT SIZE PIER SHAFTS.

9. FOR ADDITIONAL RECOMMENDATIONS CONCERNING CONCRETE PIER CONSTRUCTION THE CONTRACTOR CAN REFER TO ACI 336.1-01.

STATE OF TEXAS
WILLIAM W. SMITH
104797
06-09-23

SMITH STRUCTURAL ENGINEERS
9701 BRODIE LN., SUITE A-204 AUSTIN, TEXAS 78748
PHONE: 512-478-5281 FAX: 512-381-0127 REG. #F-3907

2900 TARRY TRAIL
AUSTIN, TEXAS

2900 TARRY TRAIL

DATE	06-09-23
PROJECT NUMBER	22012
REVISIONS	

GENERAL NOTES

S-0

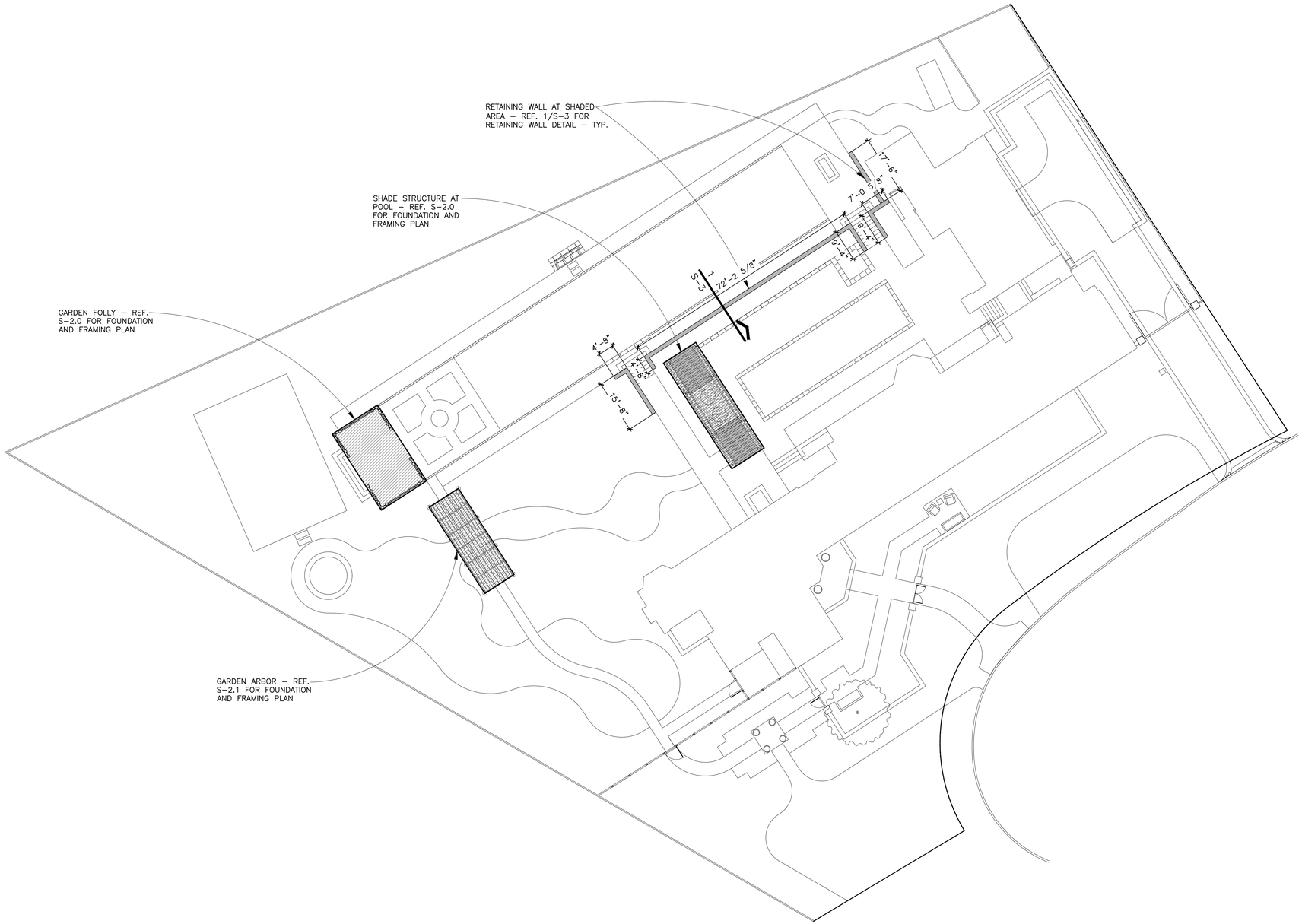

SITE PLAN

1/16" = 1'-0"

SMITH STRUCTURAL ENGINEERS
9701 BRODIE LN., SUITE A-204 AUSTIN, TEXAS 78748
PHONE: 512-478-5281 FAX: 512-381-0127 REG. #F-3907

2900 TARRY TRAIL

AUSTIN, TEXAS

2900 TARRY TRAIL

DATE	06-09-23
PROJECT NUMBER	22012
REVISIONS	

SITE PLAN

S-1

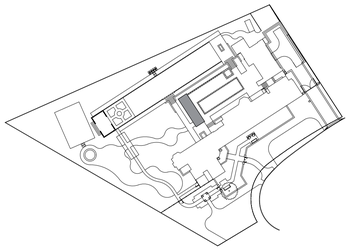

KEY PLAN
N.T.S.

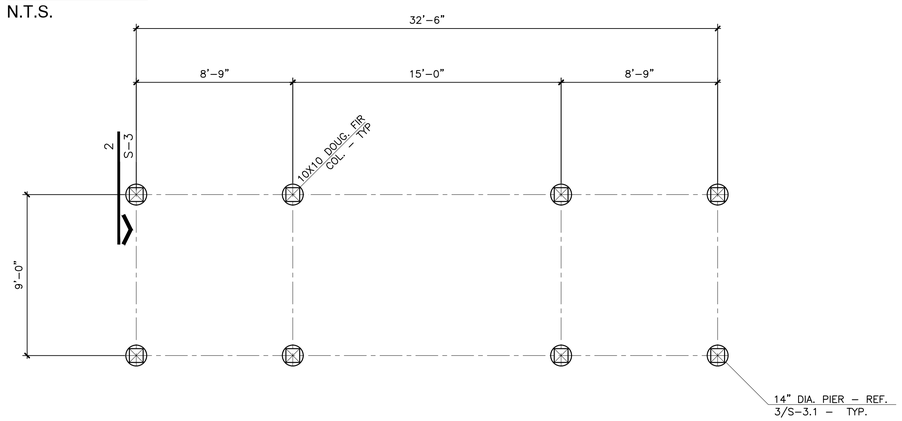

PERGOLA FOUNDATION PLAN
1/4" = 1'-0"

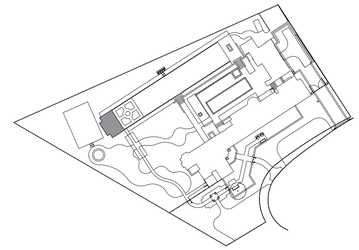

KEY PLAN
N.T.S.

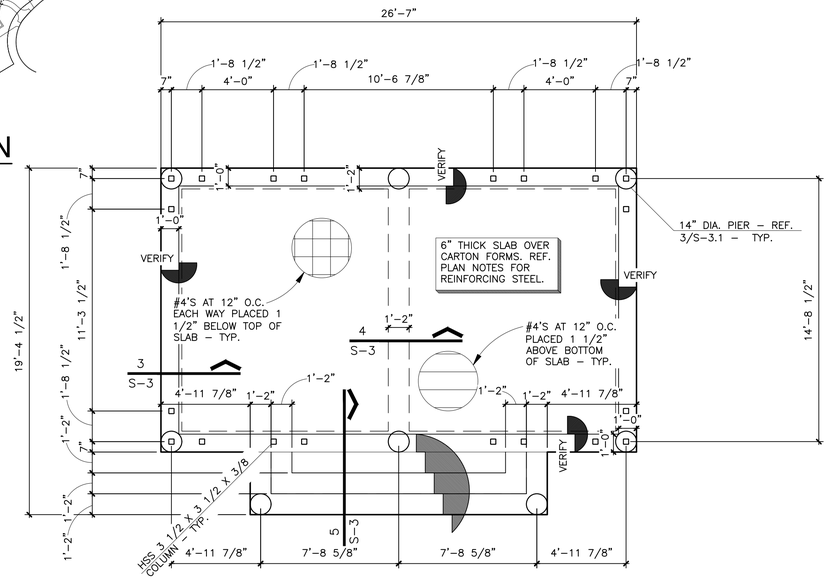

GARDEN FOLLY FOUNDATION PLAN
1/4" = 1'-0"

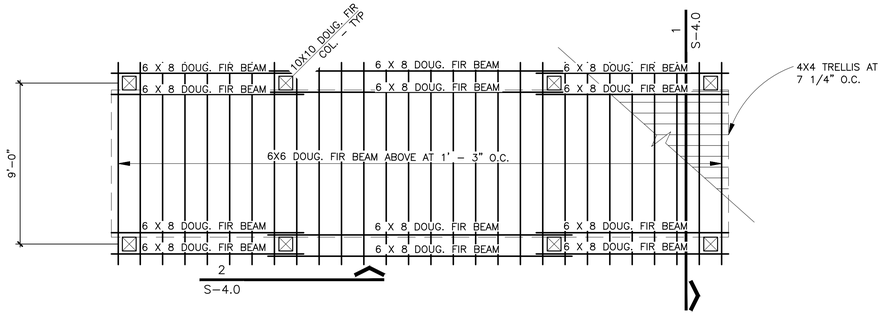

PERGOLA FRAMING PLAN
1/4" = 1'-0"

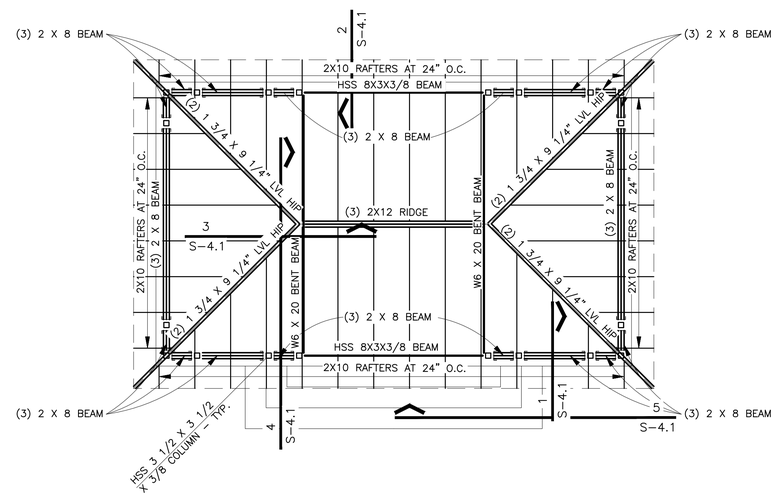

GARDEN FOLLY ROOF FRAMING PLAN
1/4" = 1'-0"

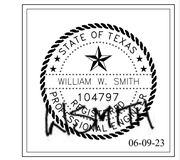

SMITH STRUCTURAL ENGINEERS
9701 BRODIE LN., SUITE A-204 AUSTIN, TEXAS 78748
PHONE: 512-478-5281 FAX: 512-381-0127 REG. #F-3907

2900 TARRY TRAIL
AUSTIN, TEXAS

2900 TARRY TRAIL

DATE	06-09-23
PROJECT NUMBER	22012
REVISIONS	

FOUNDATION PLAN
FRAMING PLAN

S-2.0

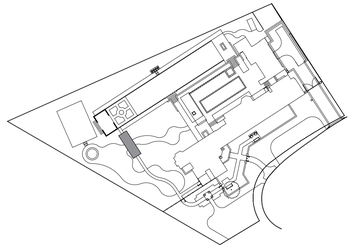

KEY PLAN
N.T.S.

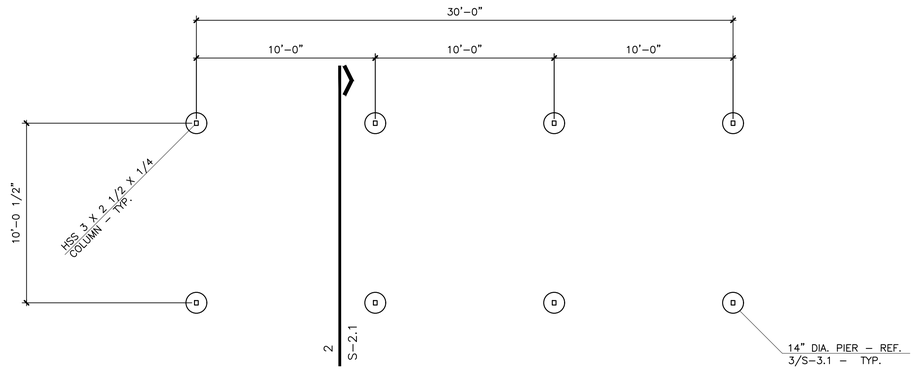

GARDEN ARBOR FOUNDATION PLAN
1/4" = 1'-0"

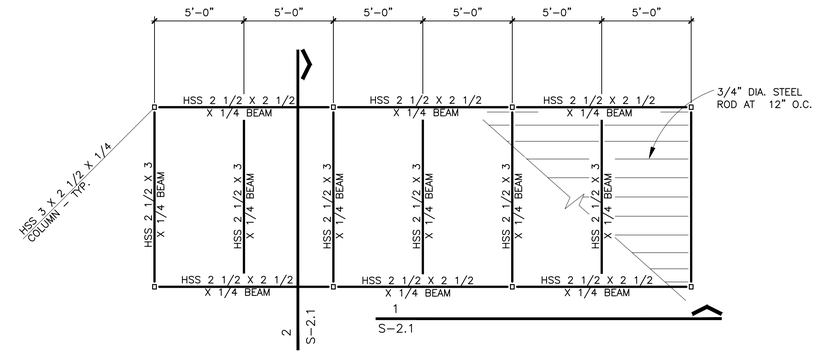

GARDEN ARBOR FRAMING PLAN
1/4" = 1'-0"

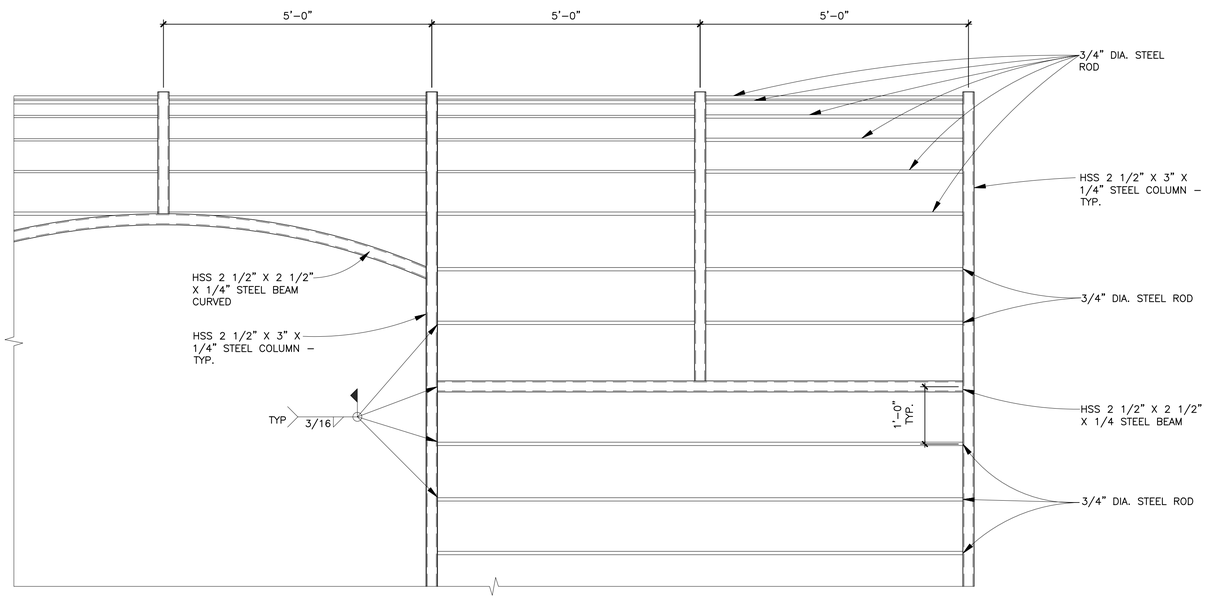

1. GARDEN ARBOR DETAIL
3/4" = 1'-0"

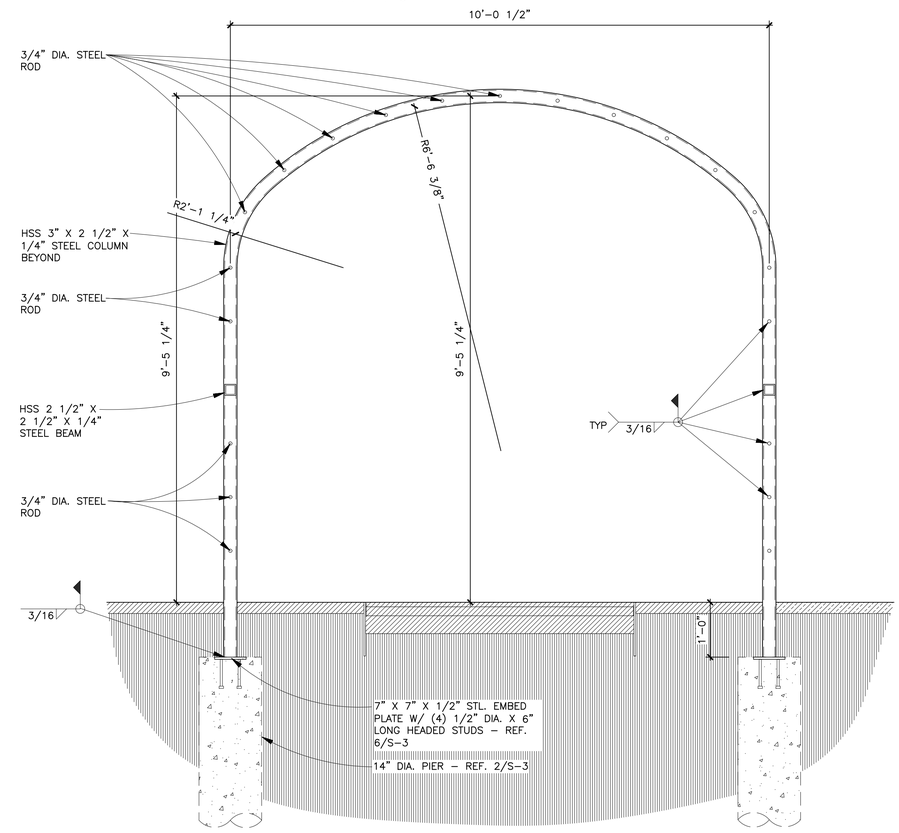

2. GARDEN ARBOR SECTION
3/4" = 1'-0"

SMITH STRUCTURAL ENGINEERS
9701 BRODIE LN., SUITE A-204 AUSTIN, TEXAS 78748
PHONE: 512-478-5281 FAX: 512-381-0127 REG. #F-3907

2900 TARRY TRAIL
AUSTIN, TEXAS

2900 TARRY TRAIL

DATE	06-09-23
PROJECT NUMBER	22012
REVISIONS	

FOUNDATION PLAN
FRAMING PLAN AND DETAILS

S-2.1

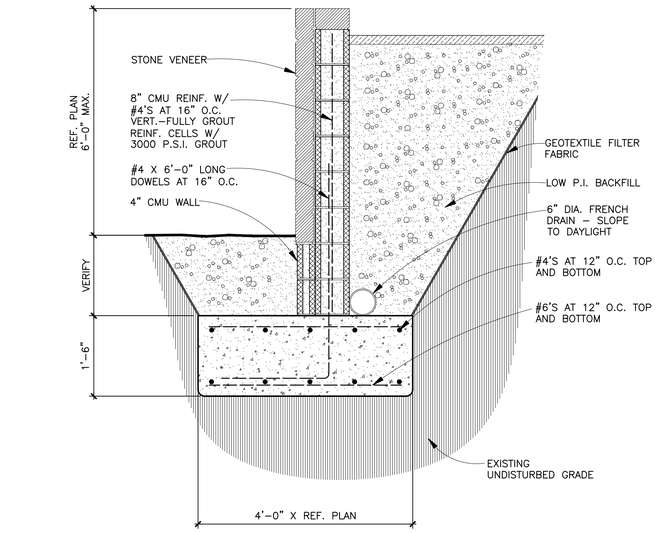

1. RETAINING WALL DETAIL

3/4" = 1'-0"

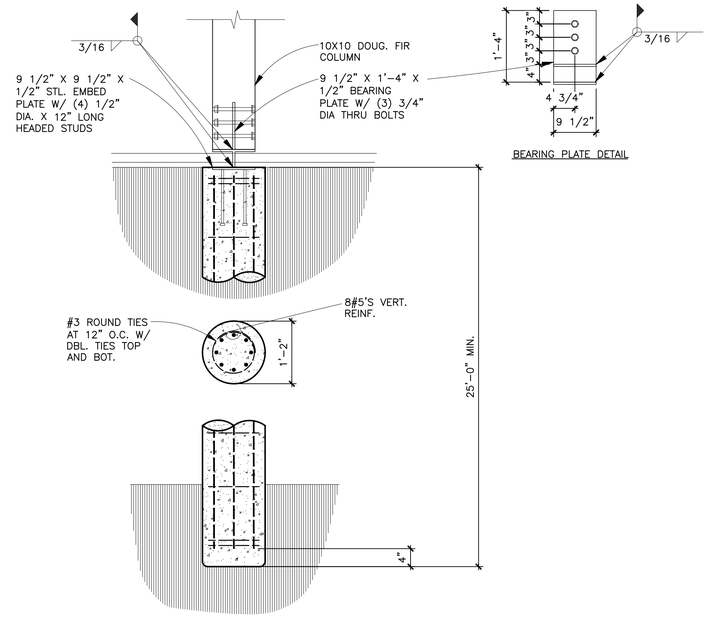

2. COL. CONN. TO PIER

1" = 1'-0"

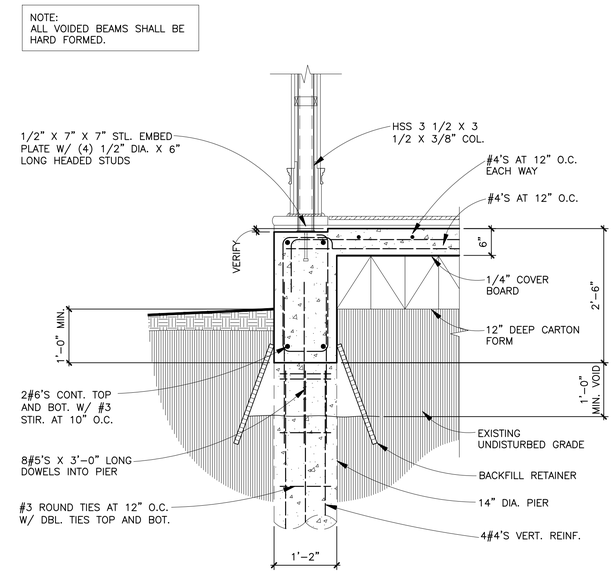

3. TYP. CONCRETE SLAB

3/4" = 1'-0"

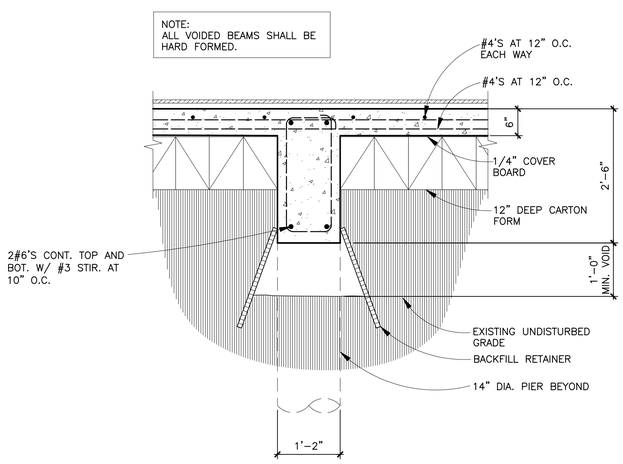

4. TYP. INTERIOR CONCRETE SLAB

3/4" = 1'-0"

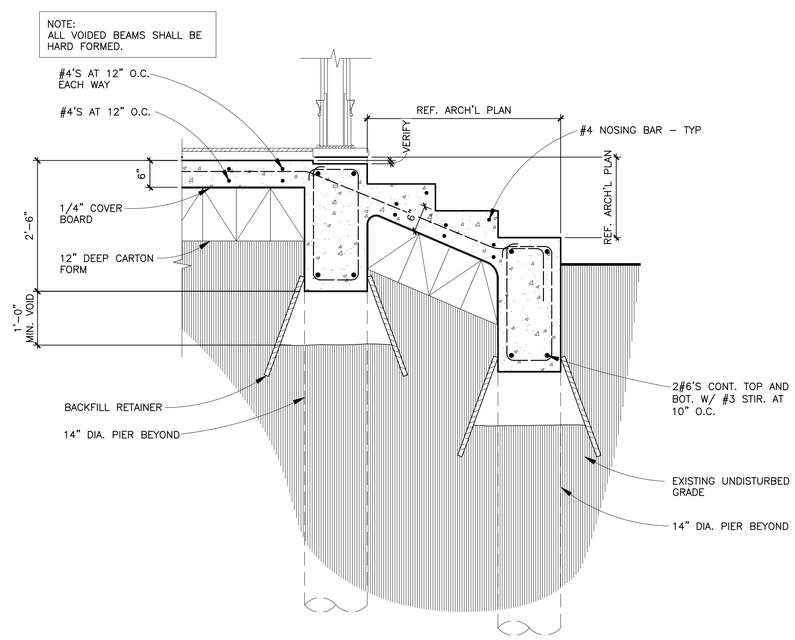

5. DETAIL AT STAIRS

3/4" = 1'-0"

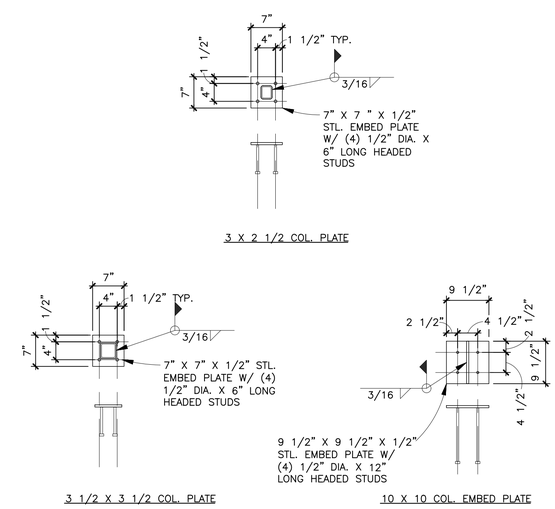

6. BASE PLATE DETAILS

3/4" = 1'-0"

SMITH STRUCTURAL ENGINEERS
9701 BRODIE LN., SUITE A-204 AUSTIN, TEXAS 78748
PHONE: 512-478-5281 FAX: 512-381-0127 REG. #F-3907

2900 TARRY TRAIL

AUSTIN, TEXAS

2900 TARRY TRAIL

DATE	06-09-23
PROJECT NUMBER	22015
REVISIONS	

FOUNDATION DETAILS

S-3

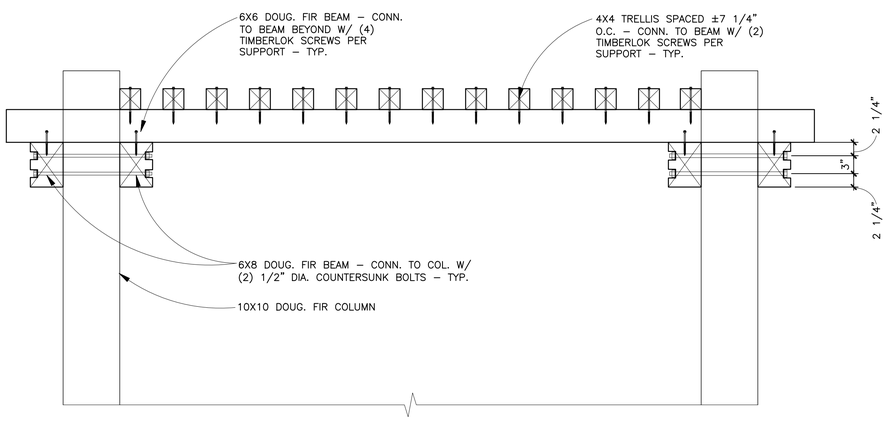

1. PERGOLA ROOF FRAMING DETAIL

1" = 1'-0"

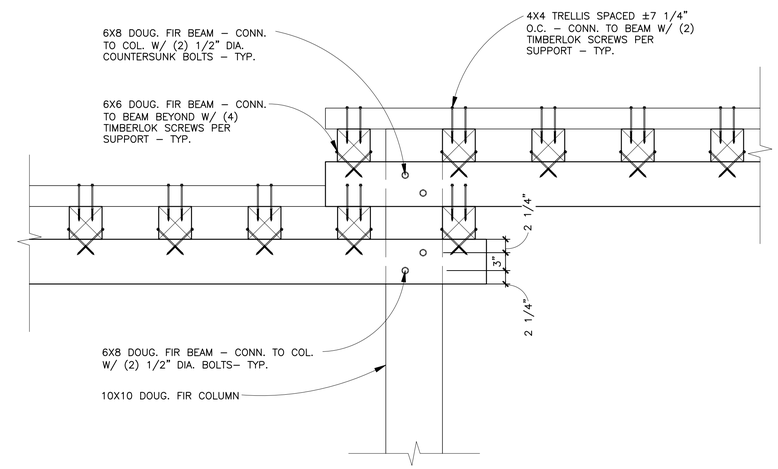

2. PERGOLA ROOF FRAMING DETAIL

1" = 1'-0"

STATE OF TEXAS
WILLIAM W. SMITH
104797
06-09-23

SMITH STRUCTURAL ENGINEERS
9701 BRODIE LN., SUITE A-204 AUSTIN, TEXAS 78748
PHONE: 512-478-5281 FAX: 512-381-0127 REG. #F-3907

2900 TARRY TRAIL

AUSTIN, TEXAS

2900 TARRY TRAIL

DATE	06-09-23
PROJECT NUMBER	22012
REVISIONS	

FRAMING DETAILS

S-4.0

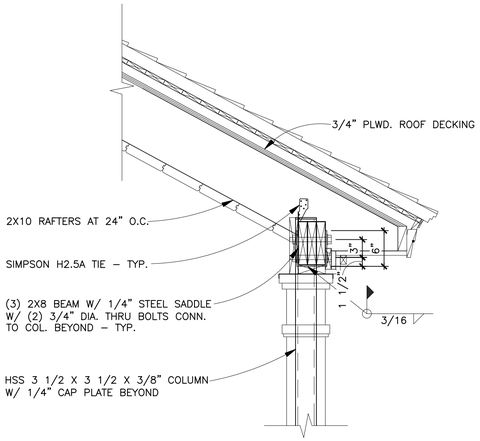

1. ROOF FRAMING DETAIL AT GARDEN FOLLY

1" = 1'-0"

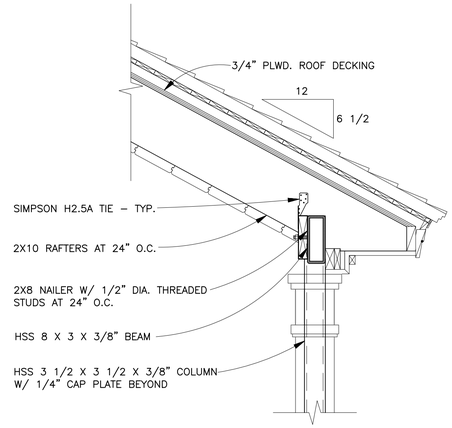

2. RAFTERS TO BEAM CONN.

1" = 1'-0"

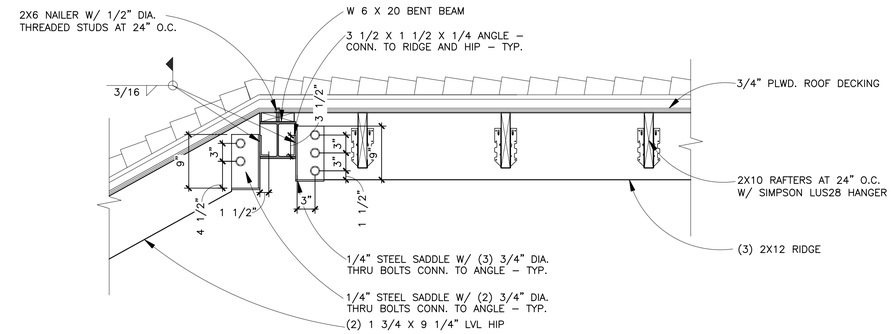

3. RIDGE/HIP TO BEAM CONN.

1" = 1'-0"

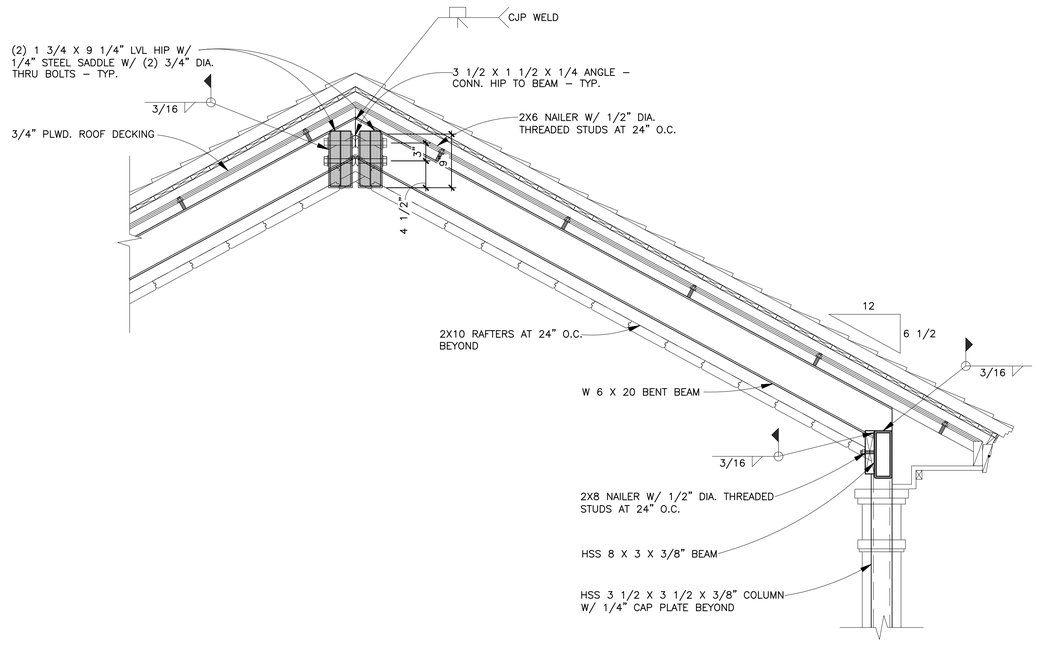

4. BENT BEAM SECTION

1" = 1'-0"

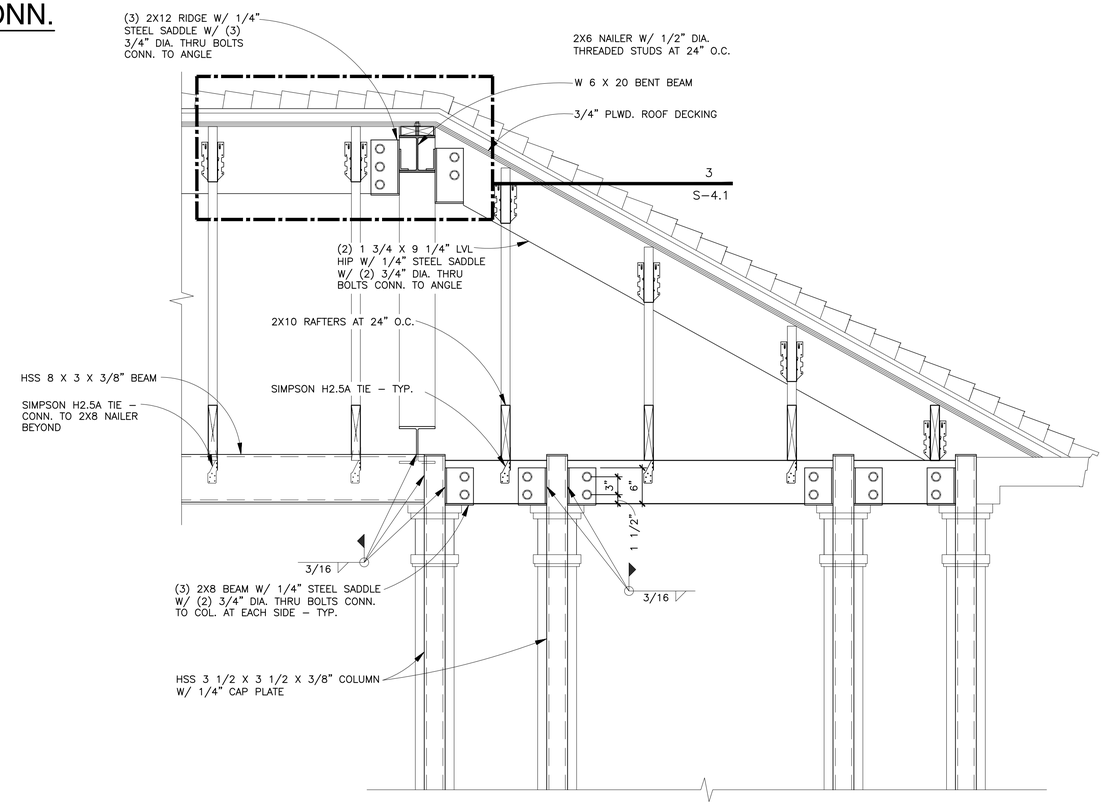

5. GARDEN FOLLY ROOF FRAMING SECTION

1" = 1'-0"

SMITH STRUCTURAL ENGINEERS
9701 BRODIE LN., SUITE A-204 AUSTIN, TEXAS 78748
PHONE: 512-478-5281 FAX: 512-381-0127 REG. #F-3907

2900 TARRY TRAIL

AUSTIN, TEXAS

2900 TARRY TRAIL

DATE	06-09-23
PROJECT NUMBER	22012
REVISIONS	

FRAMING DETAILS

S-4.1

TARRY TRAIL

STONE PREFERENCES

04.25.2023

Reclaimed European Sandstone Cobblestones -
Antique Surface

Precedent Image - Approved by BBI + Hyatt Team
Organic

Precedent Image - Approved by BBI
Organized